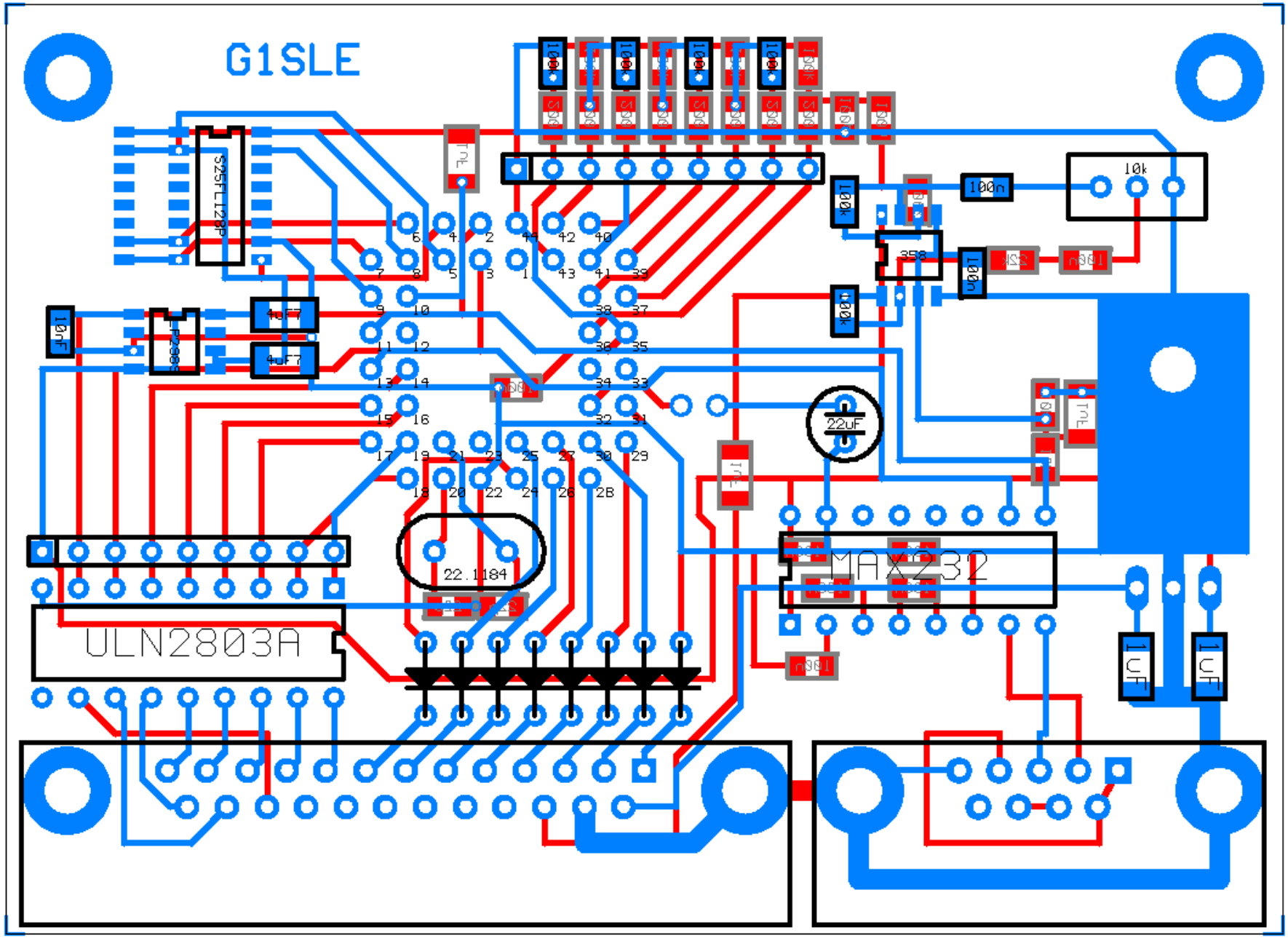
G1SLE
S25FL128P
10uF
4uF7
4uF7
100n
10k
358
100k
100k
22uF
22.1184
MAX232
ULN2803A
1uF
1uF