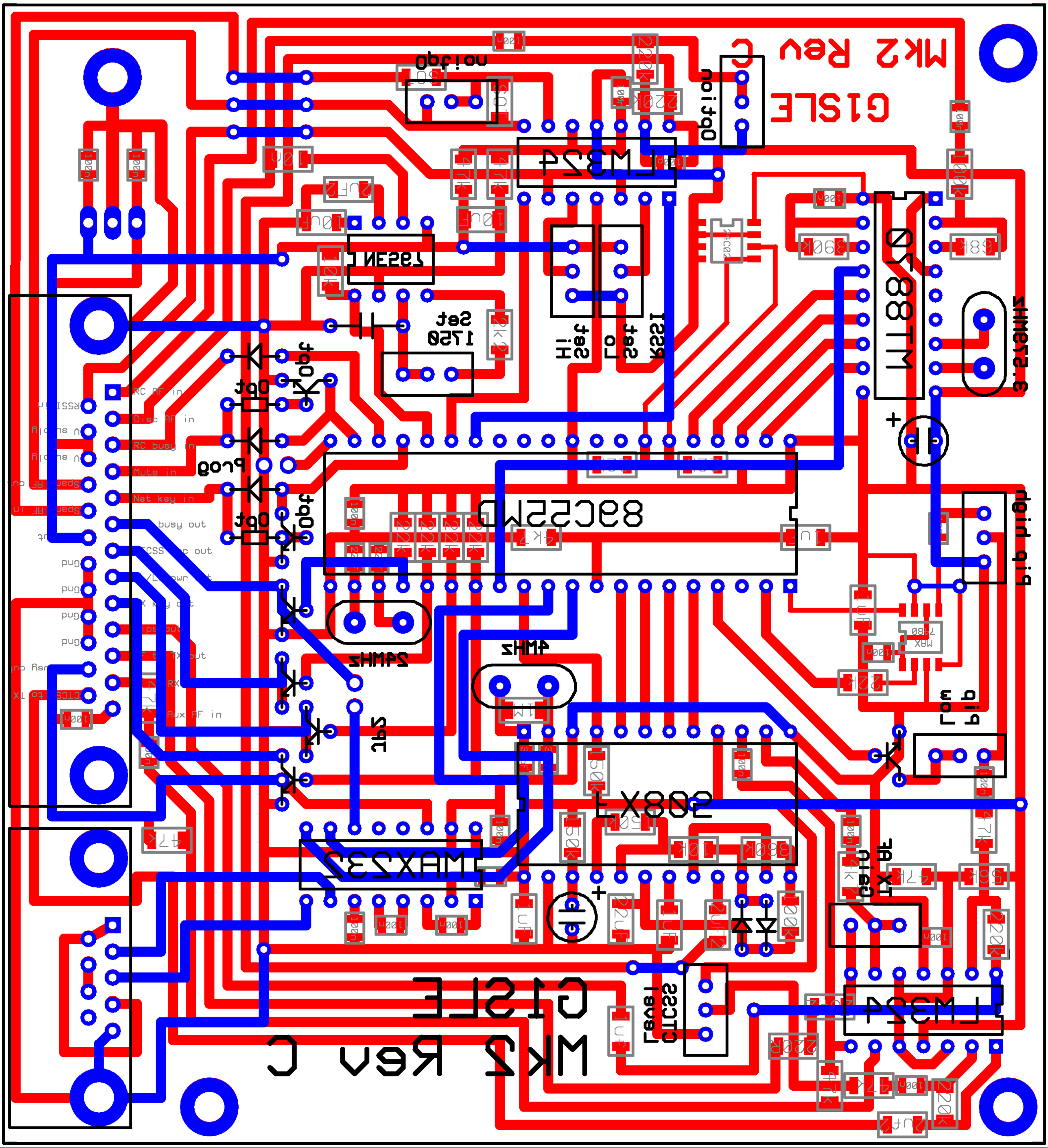

MK2 Rev C
GISLE
LM324
89C55WD
MAX232
NE567
24MHz
4MHz
3.57MHz