HEWLETT hp PACKARD

OPERATING AND SERVICE MANUAL

8565A
SPECTRUM ANALYZER
Includes Options 200 and 400

SERIAL NUMBERS

This manual applies directly to HP Model 8565A Spectrum Analyzer having serial prefix number 1712A.

For additional important information about serial numbers see INSTRUMENTS COVERED BY MANUAL in Section I.

©Copyright HEWLETT-PACKARD COMPANY 1977

1400 FOUNTAIN GROVE PARKWAY, SANTA ROSA, CALIFORNIA, U.S.A.

MANUAL PART NO. 08565-90001

Printed: May 1977

Scans by ARTEK MEDIA =>

HP MANUAL SCANS

By

Artek Media

1042 Plummer Cir. SW
Rochester, MN 55902

www.artekmedia.com

"High resolution scans of obsolete technical manuals"

**ALL HP MANUALS ARE REPRODUCED
WITH PERMISSION OF
AGILENT TECHNOLOGIES INC.**

**Reproduction of this scanned document or removal of this disclaimer
Will be considered in violation of both Agilent's and Artek Media's copy rights**

If your looking for a quality scanned technical manual in PDF format please visit our WEB site at www.artekmedia.com or drop us an email at manuals@artekmedia.com and we will be happy to email you a current list of the manuals we have available.

If you don't see the manual you need on the list drop us a line anyway we may still be able to point you to other sources. If you have an existing manual you would like scanned please write for details, This can often be done very reasonably in consideration for adding your manual to our library.

Typically the scans in our manuals are done as follows;

1) Typed text pages are typically scanned in black and white at 300 dpi.
2) Photo pages are typically scanned in gray scale mode at 600 dpi
3) Schematic diagram pages are typically scanned in black and white at 600 dpi unless the original manual had colored high lighting (as is the case for some 70's vintage Tektronix manuals).

Thanks

Dave & Lynn Henderson

Dave & Lynn Henderson
Artek Media

SAFETY

This instrument has been designed and tested according to International Safety Requirements. To ensure safe operation and to keep the instrument safe, the information, cautions, and warnings in this manual must be heeded. Refer to Section I for general safety considerations applicable to this instrument.

CERTIFICATION

Hewlett-Packard Company certifies that this instrument met its published specifications at the time of shipment from the factory. Hewlett-Packard Company further certifies that its calibration measurements are traceable to the United States National Bureau of Standards, to the extent allowed by the Bureau's calibration facility, and to the calibration facilities of other International Standards Organization members.

WARRANTY AND ASSISTANCE

This Hewlett-Packard product is warranted against defects in materials and workmanship for a period of one year from the date of shipment. Hewlett-Packard will, at its option, repair or replace products which prove to be defective during the warranty period provided they are returned to Hewlett-Packard, and provided the proper preventive maintenance procedures as listed in this manual are followed. Repairs necessitated by misuse of the product are not covered by this warranty. NO OTHER WARRANTIES ARE EXPRESSED OR IMPLIED, INCLUDING BUT NOT LIMITED TO THE IMPLIED WARRANTIES OF MERCHANTABILITY AND FITNESS FOR A PARTICULAR PURPOSE. HEWLETT-PACKARD IS NOT LIABLE FOR CONSEQUENTIAL DAMAGES.

Service contracts or customer assistance agreements are available for Hewlett-Packard products that require maintenance and repair on-site.

For any assistance, contact your nearest Hewlett-Packard Sales and Service Office. Addresses are provided at the back of this manual.

Scans by ARTEK MEDIA =>

CONTENTS

Section		Page
I	GENERAL INFORMATION	1-1
	1-1. Introduction	1-1
	1-5. Specifications	1-1
	1-7. Safety Considerations	1-1
	1-8. General	1-1
	1-10. Operation	1-1
	1-12. Safety Symbols	1-1
	1-13. Service	1-9
	1-15. Instruments Covered by Manual	1-9
	1-20. Description	1-10
	1-25. Options	1-10
	1-26. Option 200	1-10
	1-28 Option 400	1-10
	1-30. Option 907 Front Handle Kit	1-10
	1-32. Option 908 Rack Flange Kit	1-11
	1-34. Option 909 Rack Flange/ Front Handle Kit	1-11
	1-36. Option 910 Additional Operating and Service Manuals	1-11
	1-38. Accessories Supplied	1-11
	1-40. Equipment Available	1-11
	1-41. Service Accessories	1-11
	1-43. Measurement Accessories	1-11
	1-48. Recommended Test Equipment	1-11
II	INSTALLATION	2-1
	2-1. Introduction	2-1
	2-3. Initial Inspection	2-1
	2-5. Preparation for Use	2-1
	2-6. Power Requirements	2-1
	2-8. Line Voltage and Fuse Selection	2-1
	2-10. Cable Connections	2-3
	2-12. Mating Connectors	2-3
	2-14. Operating Environment	2-3
	2-18. Bench Operation	2-3
	2-20. Rack Mounting (Option 908/909)	2-3
	2-23. Front Handles (Option 907)	2-5
	2-25. Incoming Inspection Test	2-5
	2-28. Storage and Shipment	2-5
	2-29. Environment	2-5
	2-31. Packaging	2-5
III	OPERATION	3-1
	3-1. Introduction	3-1
	3-3. Operator's Maintenance	3-1
	Operating the HP 8565A Spectrum Analyzer	3-2
IV	PERFORMANCE TESTS	4-1
	4-1. Introduction	4-1
	4-4. Equipment Required	4-1
	4-6. Test Record	4-1
	4-8. Tuning Accuracy Test	4-1
	4-9. Span Width Accuracy Test	4-6
	4-10. Resolution Bandwidth Accuracy Test	4-11
	4-11. Resolution Bandwidth Selectivity Test	4-14
	4-12. Residual FM Test	4-17
	4-13. Noise Sidebands Test	4-22
	4-14. Residual Responses Test	4-23
	4-15. Average Noise Level Test	4-24
	4-16. Reference Level Variation Test	4-27
	4-17. Gain Compression Test	4-31
	4-18. Input Attenuator Accuracy Test	4-33
	4-19. Calibrator Output Accuracy Test	4-37
	4-20. Frequency Response Test	4-38
	4-21. Amplitude Accuracy Switching Between Bandwidths Test	4-45
	4-22. Display Accuracy Test	4-46
	4-23. Sweep Time Accuracy Test	4-49
V	ADJUSTMENTS	5-1
	5-1. Introduction	5-1
	5-4. Equipment Required	5-1
	5-6. Blade Tuning Tools	5-1
	5-8. Factory Selected Components	5-1
	5-10. Related Adjustments	5-1
	5-12. Low Voltage Power Supply Check and Adjustment	5-12
	5-13. High Voltage Power Supply Adjustment	5-14
	5-14. Orthogonality, Trace Alignment and Pattern Adjustment	5-17
	5-15. Z-Axis Gate Adjustment	5-20
	5-16. Storage Display Adjustments	5-23
	5-17. Horizontal and Vertical Gain Adjustments	5-26
	5-18. Log Amplifier Adjustment	5-28
	5-19. Bandwidth Filter Adjustments	5-33
	5-20. Step Gain Adjustments	5-40
	5-21. Sweep Generator Adjustments	5-43
	5-22. Digital Readout and First L.O. Adjustments	5-46
	5-23. Second and Third Converter Adjsutments	5-51
	5-24. Tuning Stabilizer Adjustments	5-58
	5-25. Preliminary Bias Adjustment	5-64

Scans by ARTEK MEDIA =>

CONTENTS (Cont'd)

Section		Page
	5-26. YTF Tracking Adjustment	5-70
	5-27. Frequency Response Adjustment	5-74
	5-28. Absolute Amplitude Calibration	5-85
VI	REPLACEABLE PARTS	6-1
	6-1. Introduction	6-1
	6-3. Abbreviations	6-1
	6-5. Replaceable Parts List	6-1
	6-7. Ordering Information	6-1
VII	MANUAL BACKDATING CHANGES	7-1
	7-1. Introduction	7-1
VIII	SERVICE	8-1
	8-1. Introduction	8-1
	8-3. Assembly Service Sheets	8-1
	8-5. Circuit Descriptions	8-1
	8-7. Troubleshooting	8-1
	8-11. Recommended Test Equipment	8-1
	8-13. Repair	8-2

ILLUSTRATIONS

Figure		Page
1-1.	Model 8565A Spectrum Analyzer with Accessories Supplied	1-0
1-2.	Typical Serial Number Plate	1-10
1-3.	Service Accessories, HP Part Number 08565-60100	1-12
2-1.	Line Voltage Selection with Power Module PC Board	2-2
2-2.	Attaching Rack Mounting Hardware and Handles	2-6
2-3.	Incoming Inspection	2-7
4-1.	Tuning Accuracy Test Setup	4-2
4-2.	Span Width Accuracy Test Setup	4-6
4-3.	Span Width Accuracy Measurement, 500 MHz and 200 MHz per Division	4-8
4-4.	Span Width Accuracy Measurement, 100 MHz per Division and Less	4-9
4-5.	Resolution Bandwidth Accuracy Test Setup	4-12
4-6.	Resolution Bandwidth Selectivity Test Setup	4-14
4-7.	Residual FM Test Setup	4-18
4-8.	Residual FM to AM Conversion Display	4-20
4-9.	Residual FM Display	4-20
4-10.	Noise Sidebands Test Setup	4-22
4-11.	Average Noise Level (Sensitivity) Internal Mixing Frequency Bands	4-26
4-12.	Reference Level Variation Test Setup	4-27
4-13.	Gain Compression Test Setup	4-32
4-14.	Input Attenuator Accuracy Test Setup	4-33
4-15.	Calibrator Output Accuracy Test Setup	4-37
4-16.	Frequency Response Test Setup	4-38
4-17.	Typical Frequency Response, .01 to 1.8 GHz	4-41
4-18.	Typical Frequency Response, 10.5 to 18 GHz	4-44
4-19.	Typical Frequency Response, 18 to 22 GHz	4-44
4-20.	Display Accuracy Test Setup	4-47
4-21.	Sweep Time Accuracy Test Setup	4-50
4-22.	Sweep Time Accuracy, 2μSEC/DIV	4-51
4-23.	Sweep Time Accuracy, 1 mSEC/DIV	4-52
5-1.	Low Voltage Power Supply Check and Adjustment Test Setup	5-12
5-2.	A40A2 Adjustment Location	5-12
5-3.	High Voltage Power Supply Adjustment Test Setup	5-14
5-4.	High Voltage Power Supply and Oscillator Driver Adjustment Locations	5-15
5-5.	Intensity Limit Adjustment Test Setup	5-17
5-6.	Orthogonality, Trace Alignment and Pattern Adjustment Test Setup	5-18
5-7.	Orthogonality and Pattern Adjustment Locations	5-19
5-8.	Z-Axis Gate Adjustment Test Setup	5-21
5-9.	Z-Axis Gate Adjustment Locations	5-22
5-10.	Pulse Generator Output for a 10% Duty Cycle	5-23
5-11.	Z-Axis Gate Output Oscilloscope Display	5-23
5-12.	Storage Assembly Adjustment Locations	5-24
5-13.	Overcollimated CRT Display	5-25
5-14.	Horizontal and Vertical Gain Adjustments Test Setup	5-26
5-15.	Horizontal and Vertical Gain Adjustment Locations	5-27
5-16.	Log Amplifier Adjustment Test Setup	5-29
5-17.	Log Amplifier Adjustment Locations	5-29
5-18.	Bandwidth Filter Adjustment Test Setup	5-34
5-19.	Crystal Short Configuration	5-34

Scans by ARTEK MEDIA =>

ILLUSTRATIONS (Cont'd)

Figure Page

5-20. Bandwidth Filter Adjustment Locations . .5-35
5-21. Crystal Filter Adjustment CRT Display . . .5-36
5-22. 3 dB Bandwidth Adjustment CRT Display. 5-39
5-23. Step Gain Adjustment Test Setup. 5-40
5-24. Step Gain Adjustment Locations 5-41
5-25. Sweep Generator Adjustment Test Setup 5-43
5-26. Sweep Generator Adjustment Locations 5-44
5-27. Time Mark Oscilloscope Display. 5-46
5-28. Digital Readout and First L.O. Adjustment Test Setup. 5-47
5-29. Digital Readout andFirst L.O. Adjustment Locations 5-48
5-30. YTF Passband Display 5-51
5-31. Second and Third Converter Adjustment Test Setup. 5-52
5-32. Second and Third Converter Adjustment Locations 5-53
5-33. Second Converter Bandpass Display 5-54
5-34. 321.4 MHz Bandpass Filter Alignment Oscilloscope Display 5-56
5-35. 321.4 MHz Bandpass Filter Alignment Spectrum Analyzer Display. 5-57
5-36. Tuning Stabilizer Control Adjustment Test Setup 5-58
5-37. Tuning Stabilizer Control Adjustment Locations 5-59
5-38. Spectrum Analyzer Display with 100 kHz FM 5-61
5-39. Tuning Stabilizer VCXO Check and Adjustment Test Setup. 5-61
5-40. Tuning Stabilizer VCXO Adjustment Locations 5-62
5-41. Preliminary Bias Adjustment Test Setup 5-64
5-42. Preliminary Bias Adjustment Locations 5-65
5-43. Phaselocked Spectrum Analyzer CRT Display. 5-67
5-44. Phase Locked Spectrum Analyzer CRT Display (10.5 – 18 GHz). 5-69
5-45. YTF Tracking Adjustment Test Setup 5-70
5-46. YTF Tracking Adjustment Locations 5-71
5-47. YTF Passband Display 5-73
5-48. Frequency Response Adjustment Test Setup 5-74
5-49. Frequency Response Adjustment Locations 5-76
5-50. Typical Frequency Response (8690B/8696A) 5-81
5-51. Frequency Response Adjustment CRT Display. 5-82
5-52. Absolute Amplitude Calibration Test Setup 5-85
5-53. Absolute Amplitude Calibration Adjustment Location 5-86
6-1. INPUT 50Ω Connector J11, Exploded View. 6-70
8-1. Overall Block Diagram 8-11
8-2. RF Block Diagram. 8-13
8-3. IF Block Diagram 8-13
8-4. Display Block Diagram. 8-13
8-5. A2A1 Front Switch Assembly (Switch Side), Component Locations . .8-14
8-6. A2A1 Front Switch Assembly (Component Side), Component Locations. . .8-15
8-7. A2A2 Frequency Display Assembly, Component Locations 8-15
8-8. A2 Front Panel Control Assembly, Connectors. 8-16
8-9. A2 Front Panel Control Assembly, Schematic Diagram 8-17
8-10. A30 First Mixer Assembly, Simplified Schematic 8-18
8-11. A30 First Mixer Assembly. 8-18
8-12. INPUT Connector J11, Exploded View . . .8-18
8-13. A30 First Mixer Assembly, A31 YIG-Tuned Oscillator Assembly, A32 YIG-Tuned Filter Assembly, A33 Limiter, A34 RF Attenuator Assembly, Schematic Diagram 8-19
8-14. A35 Second Converter Assembly, Schematic Diagram 8-21
8-15. Third Converter Assembly, Block Diagram 8-22
8-16. Substitute Divider Probe. 8-22
8-17. A37A2 Third Converter Mixer, Component Locations 8-23
8-18. A37A3 Third Converter Oscillator, Component Locations 8-23
8-19. A37 Third Converter Assembly, Schematic Diagram 8-23
8-20. A13 Relay Driver Assembly, Component Locations 8-25
8-21. A13 Relay Driver Assembly, Schematic Diagram 8-25
8-22. Simplified Circuit for Sweep Generator Current Source 8-26

Scans by ARTEK MEDIA =>

ILLUSTRATIONS (Cont'd)

Figure Page

8-23. Simplified Sweep Generator on FREE RUN or AUTO 8-26
8-24. Manual Sweep Simplified Schematic 8-27
8-25. Auto Sweep Time Current Limit, Simplified Schematic 8-27
8-26. A16 Sweep Generator Assembly, Component Locations 8-28
8-27. A16 Sweep Generator Assembly, Schematic Diagram 8-29
8-28. A15 Sweep Attenuator Assembly, Component Locations 8-30
8-29. A15 Sweep Attenuator Assembly, Schematic Diagram 8-31
8-30. A17 Frequency Control Assembly, Component Locations 8-34
8-31. A17 Frequency Control Assembly, Schematic Diagram 8-35
8-32. Full Multiband Assembly, Timing Diagram 8-37
8-33. A18 Full Multiband Assembly, Component Locations 8-38
8-34. A18 Full Multiband Assembly, Schematic Diagram 8-39
8-35. A19 YIG Driver Assembly, Component Locations 8-41
8-36. A19 YIG Driver Assembly, Schematic Diagram 8-41
8-37. Control Generator Timing Diagram. 8-42
8-38. Tuning Stabilizer System, Simplified Block Diagram 8-43
8-39. A14 Tuning Stabilizer Control Assembly, Component Locations 8-44
8-40. A14 Tuning Stabilizer Control Assembly, Schematic Diagram 8-45
8-41. 240 kHz Discriminator, Simplified Schematic 8-46
8-42. Discriminator Wave Shapes 8-46
8-43. Discriminator Output ERROR Signal 8-47
8-44. A36A1 Discriminator Assembly, Component Locations 8-48
8-45. A36A2 VCXO Assembly, Component Locations 8-49
8-46. A36 Tuning Stabilizer Assembly, Schematic Diagram 8-49
8-47. DVM Block Diagram 8-50
8-48. Simplified Timing Diagram 8-50
8-49. Measurement Timing Diagram for A12 DVM Analog Assembly and A11 DVM Digital Assembly. 8-51

Figure Page

8-50. A12 DVM Analog Assembly, Component Locations 8-52
8-51. A12 DVM Analog Assembly, Schematic Diagram 8-53
8-52. Measurement Timing Diagram for A11 DVM Digital Assembly and A12 DVM Analog Assembly. 8-54
8-53. A11 DVM Digital Assembly, Component Locations 8-56
8-54. A11 DVM Digital Assembly, Schematic Diagram 8-57
8-55. A20 Bias Assembly, Component Locations 8-58
8-56. A20 Bias Assembly, Schematic Diagram 8-59
8-57. A28 Switching in Gain 8-60
8-58. A28 Variable Gain Assembly, Component Locations 8-61
8-59. A28 Variable Gain Assembly, Schematic Diagram 8-61
8-60. Crystal Pole, Simplified Schematic 8-62
8-61. First LC Pole Circuit, Simplified Schematic 8-63
8-62. A27 Bandwidth Filter No. 1 Assembly, Component Locations. 8-64
8-63. A27 Bandwidth Filter No. 1 Assembly, Schematic Diagram 8-65
8-64. A24 Step Gain Amplifier Assembly, Block Diagram 8-66
8-65. Equivalent Circuit for Step Gain Amplifiers 8-66
8-66. A24 Step Gain Amplifier Assembly, Component Locations 8-67
8-67. A24 Step Gain Amplifier Assembly, Schematic Diagram 8-67
8-68. A23 Bandwidth Filter No. 2 Assembly, Component Locations 8-68
8-69. A23 Bandwidth Filter No. 2 Assembly, Schematic Diagram 8-69
8-70. Simplified Log Amplifier Stage 8-70
8-71. A22 Log Amplifier Assembly, Component Locations 8-70
8-72. A22 Log Amplifier Assembly, Schematic Diagram 8-71
8-73. AMPLITUDE SCALE control circuitry 8-72
8-74. A21 Video Assembly, Component Locations 8-73
8-75. A21 Video Assembly, Schematic Diagram 8-73

Scans by ARTEK MEDIA =>

ILLUSTRATIONS (Cont'd)

Figure Page

8-76. A29 RF-IF Motherboard, Component Locations 8-74
8-77. A29 RF-IF Motherboard, Schematic Diagram 8-75
8-78. A1A1 Bezel Display Assembly, Nomenclature Diagram. 8-76
8-79. A1A1 Bezel Display Assembly, Component Locations 8-76
8-80. A1A2 Display Switch Assembly, Component Locations 8-76
8-81. A3 Display Adjust Assembly, Component Locations 8-76
8-82. A1 Front Panel Display Assembly and A3 Display Adjust Assembly, Schematic Diagram 8-77
8-83. A6 X Deflection Amplifier Assembly, Component Locations 8-79
8-84. A6 X Deflection Amplifier Assembly, Schematic Diagram 8-79
8-85. A5 Y Deflection Amplifier Assembly, Component Locations 8-81
8-86. A5 Y Deflection Amplifier Assembly, Schematic Diagram 8-81
8-87. A4 Z Axis Amplifier Assembly, Component Locations 8-82
8-88. A4 Z Axis Amplifier Assembly, Schematic Diagram 8-83
8-89. A7 Storage Assembly, Component Locations 8-84
8-90. A7 Storage Assembly, Schematic Diagram 8-85
8-91. A8 High Voltage Power Supply Assembly, Component Locations 8-86

Figure Page

8-92. A9 High Voltage Oscillator Assembly, Component Locations 8-86
8-93. A8 High Voltage Power Supply Assembly and A9 High Voltage Oscillator Assembly, Schematic Diagram 8-87
8-94. A10 Display Motherboard, Component Locations 8-89
8-95. A10 Display Motherboard, Schematic Diagram 8-89
8-96. A38 Readout Input Assembly, Component Locations 8-91
8-97. A38 Readout Input Assembly, Schematic Diagram 8-93
8-98. A39 Readout Driver Assembly, Component Locations 8-94
8-99. A39 Readout Driver Assembly, Schematic Diagram 8-95
8-100. +158V Regulator Circuit, Simplified Schematic 8-96
8-101. A40A1 Rectifier Assembly, Component Locations 8-96
8-102. A40A2 Regulator Assembly, Component Locations 8-97
8-103. A40A1 Rectifier Assembly, A40A2 Regulator Assembly, Schematic Diagram . . .8-99
8-104. Model 8565A Major Assembly and Component Locations, Front Panel 8-101
8-105. Model 8565A Major Assembly and Component Locations, Bottom View 8-101
8-106. Model 8565A Major Assembly and Component Locations, Top View. 8-101

TABLES

Table Page

1-1. Model 8565A Specifications 1-2
1-2. Model 8565A Supplemental Characteristics . . . 1-5
1-3. Recommended Test Equipment 1-14
2-1. Model 8565A Mating Connectors 2-3
2-2. AC Power Cables Available 2-4
2-3. Rack Mounting Kits for 8565A 2-5
4-1. Tuning Accuracy Test Limits, 3.8 to 22 GHz Bands 4-5
4-2. Narrow Span Width Error Measurement. 4-10
4-3. Resolution Bandwidth Selectivity. 4-17

Table Page

4-4. Average Noise Level Specification. 4-25
4-5. Average Noise Level. 4-26
4-6. Reference Level Variation (10 dB steps) in Log Mode 4-28
4-7. Reference Level Variation (10 dB steps) in Linear Mode. 4-29
4-8. Conversions from Deviation in Linear Mode to Deviation in dB 4-30
4-9. Reference Level Fine (Vernier) Variation 4-31

Scans by ARTEK MEDIA =>

TABLES (Cont'd)

Table		Page
4-10.	Input Attenuator Accuracy, 100 MHz	4-34
4-11.	Input Attenuator Accuracy, 18 GHz	4-36
4-12.	Correcting for Frequency Response of Signal Source	4-43
4-13.	Amplitude Accuracy Switching Between Bandwidths	4-46
4-14.	Log Display Accuracy	4-48
5-1.	Adjustable Components	5-2
5-2.	Factory Selected Components	5-9
5-3.	Related Adjustments	5-10
5-4.	Low Voltage Power Supplies	5-13
5-5.	Linear Gain Adjustment Limits	5-30
5-6.	Log Fidelity Check	5-31
5-7.	Log/Lin Correlation Check	5-32
5-8.	Log Gain Adjustment Limits	5-33
5-9.	3-dB Bandwidth Adjustments and Limits	5-39
5-10.	REF LEVEL Step Gain Adjustment	5-42
5-11.	3 MHz Bandwidth	5-57
5-12.	YTF Tracking Adjustment	5-73
5-13.	Error Characterization of Signal Source	5-80
6-1.	Reference Designations and Abbreviations	6-2
6-2.	Replaceable Parts	6-4
6-3.	Manufacturer's Code List	6-69
8-1.	Schematic Diagram Notes	8-2
8-2.	A1A2 Display Switch Assembly Control Lines	8-76

Scans by ARTEK MEDIA =>

HP 8565A

LINE POWER CABLE

(SEE TABLE 2-2 FOR
HP PART NUMBER)

Figure 1-1. Model 8565A Spectrum Analyzer With Accessories Supplied

Scans by ARTEK MEDIA =>

SECTION I
GENERAL INFORMATION

1-1. INTRODUCTION

1-2. This Operating and Service Manual contains information required to install, operate, test, adjust, and service the Hewlett-Packard Model 8565A. Figure 1-1 shows the instrument and accessories supplied. This section covers instrument identification, description, options, accessories, specifications, and other basic information.

1-3. This manual is divided into eight sections which provide information as follows:

a. SECTION I, GENERAL INFORMATION, contains the instrument description and specifications as well as the accessory and recommended test equipment list.

b. SECTION II, INSTALLATION, contains information relative to receiving inspection, preparation for use, mounting, packing, and shipping.

c. SECTION III, OPERATION, contains instructions for operating the instrument.

d. SECTION IV, PERFORMANCE TESTS, contains information required to verify that instrument performance is in accordance with published specifications.

e. SECTION V, ADJUSTMENTS, contains information required to properly adjust and align the instrument after repair.

f. SECTION VI, REPLACEABLE PARTS, contains information required to order all parts and assemblies.

g. SECTION VII, MANUAL BACKDATING CHANGES, contains backdating information to make this manual compatible with earlier equipment configurations.

h. SECTION VIII, SERVICE, contains descriptions of the circuits, schematic diagrams, parts location diagrams, and troubleshooting procedure to aid the user in maintaining the instrument.

1-4. Supplied with this manual is an Application Note entitled "Operating the 8565A Spectrum Analyzer." This Application Note should be kept with the instrument for use by the operator. Additional copies can be order separately through your nearest Hewlett-Packard office by ordering Application Note 220.

1-5. SPECIFICATIONS

1-6. Instrument specifications are listed in Table 1-1. These specifications are the performance standards or limits against which the instrument is tested. Table 1-2 lists supplemental characteristics. Supplemental characteristics are not specifications but are typical characteristics included as additional information for the user.

1-7. SAFETY CONSIDERATIONS

1-8. General

1-9. This is a Safety Class I instrument and has been manufactured and tested according to international safety standards.

1-10. Operation

1-11. BEFORE APPLYING POWER make sure the instrument's ac input is set for the available ac line voltage, that the correct fuse is installed, and that all normal safety precautions have been taken. (See Warnings below).

1-12. Safety Symbols

⚠ Instruction manual symbol: the apparatus will be marked with this symbol when it is necessary for the user to refer to the instruction manual in order to protect the apparatus against damage.

⚡ Indicates dangerous voltages.

⏚ Earth terminal

Scans by ARTEK MEDIA =>

Table 1-1. Model 8565A Specifications (1 of 3)

SPECIFICATIONS

FREQUENCY SPECIFICATIONS

FREQUENCY RANGE

Internal mixer 0.01 to 22 GHz

Covered in six ranges selectable by Frequency Band pushbuttons (in GHz): .01 to 1.8; 1.7 to 4.1; 3.8 to 8.5; 5.8 to 12.9; 8.5 to 18; 10.5 to 22.

External mixer HP 11517A 14.5 to 40 GHz

Covered in two ranges selectable by Frequency Band pushbuttons (in GHz) : 14.5 to 26.6 (6+ harmonic mode); 22.9 to 40 (10+ harmonic mode).

Tuning Accuracy

The overall tuning accuracy of the digital Frequency readout in any span mode:

Internal mixing

3.01 to 2.5 GHz < ±5 MHz ±20% of Frequency Span/Div
2.5 to 22 GHz < ±0.2% ±20% of Frequency Span/Div

External mixing

14.5 to 40 GHz < ±0.7% ±20% of Frequency Span/Div

Digital readout resolution (included in tuning accuracy)

Internal mixing 1 MHz; External mixing 10 MHz

FREQUENCY SPANS (on a 10 division CRT horizontal axis)

1.7 to 22 GHz

Multiband span of spectrum from 1.7 to 22 GHz in one sweep. The frequency (position) corresponding to the tuning marker is set by the Tuning control and indicated in GHz by the digital Frequency displays on the front panel and the CRT bezel.

Full Band

Displays spectrum of entire Frequency Band selected. Tuning marker displayed in Full Band mode (becomes center frequency when Per Division mode is selected). Marker frequency is given on the digital displays.

Per Division

Eighteen calibrated spans from 1 kHz/div to 500 MHz/Div in a 1, 2, 5, 10 sequence. In "F" position the entire Frequency Band selected is spanned.

Span width accuracy

The frequency error for any two points on the display for spans from 500 MHz to 200 kHz/Div is less than ±5% of the indicated separation; for stabilized spans 100 kHz/Div and less, the error is less than ±15%.

Center Frequency

The center frequency represented by the CRT is indicated in GHz by the digital Frequency displays on the front panel and the CRT bezel.

Zero Span

Analyzer becomes a manually tuned receiver (for the time domain display of signal modulation) set to the frequency indicated in GHz by the digital Frequency displays.

SPECTRAL RESOLUTION AND STABILITY

Resolution Bandwidths

Resolution (3 dB) Bandwidths from 1 kHz to 3 MHz in 1, 3, 10 sequence. Bandwidth may be varied independently or coupled to Frequency Span/Div control. Optimum coupling (best ratio of Frequency Span/Div to Resolution Bandwidth) is indicated by alignment of markers (▶◀) on both controls.

Uncoupled, the controls for Freq Span/Div and Resolution Bandwidth may be independently set so any resolution bandwidth (3 MHz to 1 kHz) may be used with any span width (F and 500 MHz to 1 kHz/Div).

Resolution Bandwidth accuracy

Individual resolution bandwidth 3 dB points: < ±15%.

Selectivity: (60 dB/3 dB bandwidth ratio) < 15:1 for bandwidths 1 kHz to 3 MHz.

Stability (fundamental mixing .01 to 4.1 GHz)

Total residual FM

Stabilized < 200 Hz p-p in 0.1 sec
Unstabilized < 10 kHz p-p in 0.1 sec

Stabilization range: First LO automatically stabilized (unless auto stabilizer is OFF) for frequency spans 100 kHz/div or less.

Noise sidebands: At least 70 dB down, greater than 30 kHz from center of CW signal when set to a 1 kHz Resolution Bandwidth and a 10 Hz (.01) Video Filter.

Video Filter

Post detection low-pass filter used to average displayed noise for a smooth trace. Nominal settings are given as decimal fractions of the Resolution Bandwidth: OFF, .3, .1, .03, .01, and .003. A 1 Hz NOISE AVG (noise averaging) setting is provided for noise level measurement.

AMPLITUDE SPECIFICATIONS

AMPLITUDE RANGE — Internal mixer

(Amplitude specifications for the HP 8565A Spectrum Analyzer with the HP 11517A External Mixer are given near the end of Table 1-1.)

Measurement range:

Damage levels:

Total power: +30 dBm (1 watt)

dc: 0V with 0 dB Input attenuation
± 7V with ≥ 10 dB Input attenuation

ac: (<50Ω nominal source impedance):
0V with 0 dB Input attenuation
10V peak with ≥ 10 dB Input attenuation

Gain compression:

For signal levels below MAXIMUM input setting, gain compression is less than 1 dB.

Scans by ARTEK MEDIA =>

Table 1-1. Model 8565A Specifications (2 of 3)

Average noise level:
Sensitivity (minimum discernible signal) is given by the signal level which is equal to the average noise level, causing approximately a 3 dB peak above the noise. Maximum average noise level with 1 kHz Resolution Bandwidth (0 dB attenuation and 0.003 (3 Hz) video filter) is given in the table below:

Frequency Band (GHz)	First IF in MHz	Harmonic Mode	Avg. Noise Level (dBm)
.01-1.8	2050	1−	−110
1.7-4.1	321.4	1−	−106
3.8-8.5	321.4	2−	−102
5.8-12.9	321.4	3−	−92
8.5-18	321.4	4+	−83
10.5-22	321.4	5+	−72

Reference Level

Reference Level range: +70 dBm[1] to −102 dBm in 10 dB steps and continuous 0 to −12 dB calibrated vernier.

Reference Level accuracy:
With Sweep Time/Division control in Auto setting, the optimum sweep rate is selected automatically for any combination of Frequency Span/Div, Resolution Bandwidth and Video Filter settings. Thus, the Auto Sweep setting insures a calibrated amplitude display within the following limits:

Calibrator output
−10 dBm ±0.3 dB
100 MHz ±10 kHz

Reference Level variation (Input Attenuator at 0 dB)

10 dB Steps: < ±0.5 dB (0 to −70 dBm)
< ±1.0 dB (0 to −90 dBm)

Vernier (0 to −12 dB) continuous: Maximum error <±0.5 dB, when read from Reference Level Fine control.

Input Attenuator (at preselector input, 70 dB range in 10 dB steps)

Step size variation (for steps from 0 to 60 dB):
< ±1.0 dB .01 to 18 GHz

Maximum cumulative Error (from 0 to 60 dB):
< ±2.4 dB .01 to 18 GHz

Frequency Response (with 0 or 10 dB of Input Attenuation)
Frequency response includes input attenuator, preselector and mixer frequency response plus mixing mode gain variation (band to band).

Frequency Band (GHz)	Frequency Response (± dB MAX.)
0.01 to 1.8	1.2
1.7 to 4.1	1.7
3.8 to 8.5	2.2
5.8 to 12.9	2.5
8.5 to 18	3.0
10.5 to 22	4.5

Switching between bandwidths: 3 MHz to 300 kHz, ±0.5 dB; 3 MHz to 1 kHz, ±1.0 dB[2].

Calibrated display range

Log — expanded from reference level down:
70 dB with 10 dB/Div scale factor
40 dB with 5 dB/Div scale factor
16 dB with 2 dB/Div scale factor
8 dB with 1 dB/Div scale factor

Linear. Full scale from 56 μV (−102 dBm across 50 ohms to 707 volts (+70 dBm)[1] in 10 dB steps and continuous 0 to −12 dB vernier. Full scale signals in linear translate to approximately full scale signals in the log modes.

Display accuracy
Log: < ±0.1 dB/dB but not more than ±1.5 dB over full 70 dB display range.
Linear: < ±0.1 division over full 8 division deflection

Residual responses (no signal present at input):
With 0 dB input attenuation on fundamental mixing (0.01 to 4.1 GHz) < −90 dBm.
Signal Identifier: Provided on all Frequency Bands in 1 MHz/Div frequency span for signal identification (reads incorrectly for 100 MHz Cal Output signal)

SWEEP SPECIFICATIONS

SWEEP TIME

Auto: Sweep time is automatically controlled by Frequency Span/Div, Resolution Bandwidth and Video Filter controls to maintain an absolute amplitude calibrated display.

Calibrated Sweep times: 21 internal sweep times from 2 μsec/Div to 10 sec/Div in 1, 2, 5, 10 sequence. Sweep time accuracy ±10% except for 2, 5, and 10 sec/Div which are ±20%. Swept frequency modes use sweep times 2 msec/Div through 10 sec/Div. When operated as a fixed tuned receiver (Zero Span) the full range of sweep times (2 μsec to 10 sec/Div) may be used to display modulation waveforms.

GENERAL SPECIFICATIONS

TEMPERATURE RANGE:

Operating 0°C to 55°C, storage −40° to +75°C.

HUMIDITY RANGE (Operating):

< 95% R.H. 0°C to 40°C.

EMI:

Conducted and radiated interference is within the requirements of methods CE03 and RE02 of MIL STD 461A, VDE 0871 and CISPR pub'n 1, 2, and 4.

POWER REQUIREMENTS

48-66 Hz, 100, 120, 200 or 240 volts (−10% to +5%) 220 VA maximum. Fan cooled.

[1] Input level not to exceet +30 dBm damage level.
[2] 100 kHz BW limited to 90% relative humidity.

Scans by ARTEK MEDIA =>

Table 1-1. Model 8565A Specifications (3 of 3)

DIMENSIONS

426 mm wide: 188 mm high, 552 mm deep (16 3/4 in. x 7 3/8 in. x 21 3/4 in.)

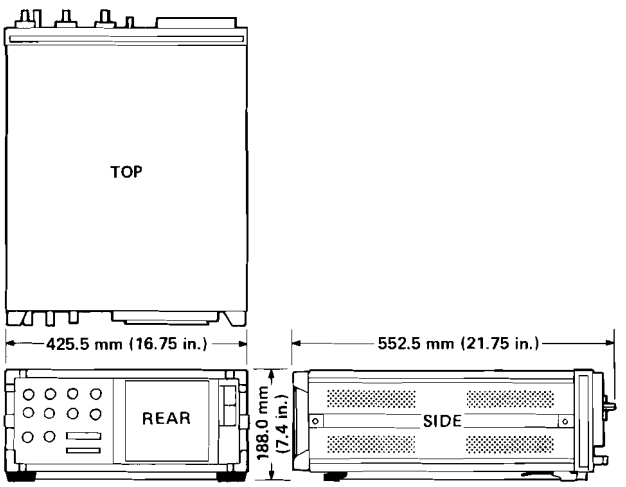

WEIGHT: 30.4 kg (60 lbs.)

11517A EXTERNAL MIXER

When used with the 8565A for operation in waveguide 14.5 to 40 GHz:

MEASUREMENT RANGE

Maximum waveguide input: Saturation (gain compression < 1 dB), −15 dBm; Damage Level > 0 dBm or 0.1 erg.

Sensitivity:
(Average noise level in a 10 kHz IF bandwidth)
14.5-18 GHz < −80 dBm
18-26.5 GHz < −70 dBm
26.5-40 GHz < −60 dBm
Typical sensitivity is 10 dB better for each band.

STANDARD OPTIONS AVAILABLE

OPTION 200, CALIBRATION IN dBμV

Front panel controls read in dBm as in standard instrument.

All specifications identical to standard 8565A except:
Bezel readout (top line, Reference Level): Reference level displayed in dBμV given in 1 dB increments from +177 dBμV[1] to +5 dBμV.

Average noise level (with 1 kHz IF bandwidth):

Band (GHz)	Max. Avg. Noise Level (dBμV)
0.01 to 1.8 GHz	−3
1.7 to 4.1	+1
3.8 to 8.5	+5
5.8 to 12.9	+15
8.5 to 18	+24
10.5 to 22	+35

Log Reference Level range: +177 dBμV[1] to +5 dBμV in 10 dB steps and continuous 0 to −12 dB calibrated vernier.

Calibrator Output: Amplitude +97 dBμV ± 0.3 dB.

OPTION 400, 400 Hz POWER SUPPLY

Permits operation on 50, 60, or 400 Hz mains.

All specifications identical to standard 8565A except:

GENERAL SPECIFICATIONS

Temperature range (operating): 50-60 Hz 0° to 40° C
400 Hz 0° to 55° C

Power requirements: 50, 60, or 400 Hz; 100, 120, 200, or 240 volts (−10% to +5%) 220 VA ,maximum. Fan cooled.

Scans by ARTEK MEDIA =>

Table 1-2. Model 8565A Supplemental Characteristics (1 of 4)

SUPPLEMENTAL CHARACTERISTICS

NOTE: Values in this table are not specifications but are typical characteristics included for user information.

FREQUENCY CHARACTERISTICS

FREQUENCY SPANS

1.7 to 22 GHz

When this mode is selected the analyzer displays the entire spectrum from 1.7 to 22 GHz. A 3 MHz Resolution Bandwidth, 9 kHz Video Filter, and 100 msec/div Sweep Time are automatically selected.

Full Band

When selected by panel pushbutton, analyzer displays spectrum of Frequency Band chosen. This automatically selects a 3 MHz Resolution Bandwidth and a 9 kHz Video Filter. Sweep Time/Div varies from approximately 10 msec to 100 msec/div depending on which Frequency Band is chosen. Tuning marker frequency (position) indicates where analyzer tuning will be centered if a Per Division span mode is chosen.

Per Division

In "F" position (full band), the entire range of the Frequency Band selected is spanned, thus allowing the use of Resolution Bandwidth and Video Filter settings other than those chosen when the Full Band push button is depressed. Center frequency of the analyzer's display is set by the tuning control and indicated by the LED readouts. The Frequency CAL control to the right of the display window on the front panel is used to set the LED readout to agree with the actual center frequency of the CRT display (normally set using the 100 MHz CAL OUTPUT as a 0.100 GHz frequency reference).

Out-of-range blanking

The out-of-range portion of the CRT trace is automatically blanked whenever the analyzer is swept beyond a band edge.

RESOLUTION

Bandwidth Ranges

See Figure 1 for curves of typical analyzer resolution using different IF bandwidths.

IF Bandwidth shape: *Approximately gaussian (synchronously tuned, 4-pole filter)*

Frequency drift (fundamental mixing, .01-4.1 GHz) long term

At fixed center frequency after 2 hours warm-up:
Stabilized $< \pm 3.0$ *kHz/10 minutes*
Unstabilized $< \pm 25$ *kHz/10 minutes*

With Temperature Changes
Stabilized < 10 *kHz/°C*
Unstabilized < 200 *kHz/°C*
Auto stabilizer may be disabled in narrow spans (<100 kHz/Div) by depressing front panel pushbutton switch to "OFF" position.

VIDEO FILTER

Video Filter bandwidths typically ±20% of nominal value.

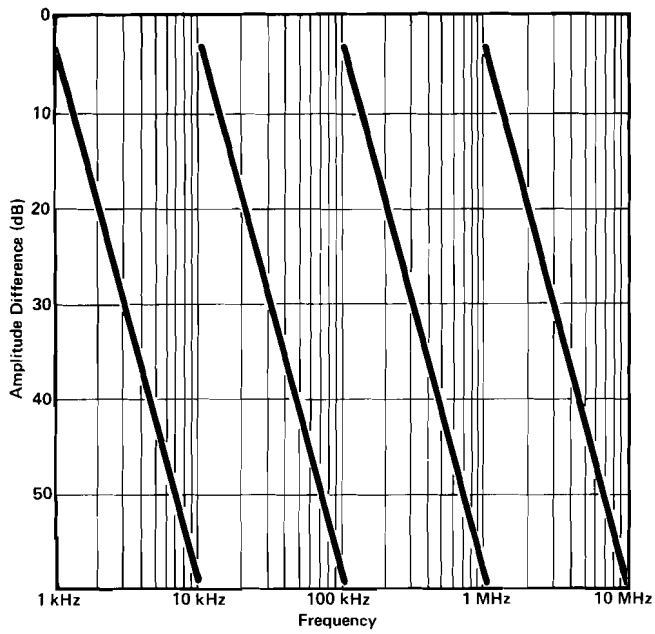

FIGURE 1. Typical Spectrum Analyzer Resolution

INTERNAL PRESELECTOR

Frequency Range	Description	Rejection
0.01 to 1.8 GHz	Low-pass filter	> 50 dB above 2.05 GHz
1.7 to 22 GHz	Tracking YIG tuned filter	> 70 dB greater than 642.8 MHz from center of pass band 1.7 to 18GHz, > 60 dB from 18 to 22 GHz

TRACKING PRESELECTOR

Preselector skirt roll-off: *Characteristics of a three-pole filter (nominally 18 dB/octave), 3 dB bandwidth typically varies from 25 MHz (at 1.7 GHz) to 70 MHz (at 22 GHz).*

AMPLITUDE CHARACTERISTICS

DYNAMIC RANGE

Maximum power ratio of two signals simultaneously present at the input that may be measured within the limits of specified accuracy, sensitivity and distortion (i.e., spurious responses): 0.01 to 22 GHz > 70 dB.

Spurious responses: *(Input attenuator set to 0 dB)*

Second harmonic distortion

Frequency Range	*Input Power*	*Relative Distortion*
0.01-1.8 GHz	*−40 dBm*	*−70 dB*
1.7-22 GHz	*0 dBm*	*−100 dB**

**May be below average noise level.*

Scans by ARTEK MEDIA =>

Table 1-2. Model 8565A Supplemental Characteristics (2 of 4)

SUPPLEMENTAL CHARACTERISTICS

NOTE: Values in this table are not specifications but are typical characteristics included for user information.

Third order intermodulation

Frequency Range	For Two Input Signals With		Relative Distortion
	Input Power	Signal Sep.	
0.01-22 GHz	−25 dBm	50 kHz	70 dB
1.7-12.9 GHz	0 dBm	70 MHz	100 dB*
1.7-22 GHz	0 dBm	100 MHz	100 dB*

*May be below average noise level.

For typical harmonic and third order intermodulation distortion, see Figure 2.

Image and Multiple Responses:

Frequency	Image (out of band)	Multiple (in-band)
0.01-1.8 GHz	−50 dB	non-existent
1.7-18 GHz	−70 dB	−70 dB
18-22 GHz	−60 dB	−60 dB

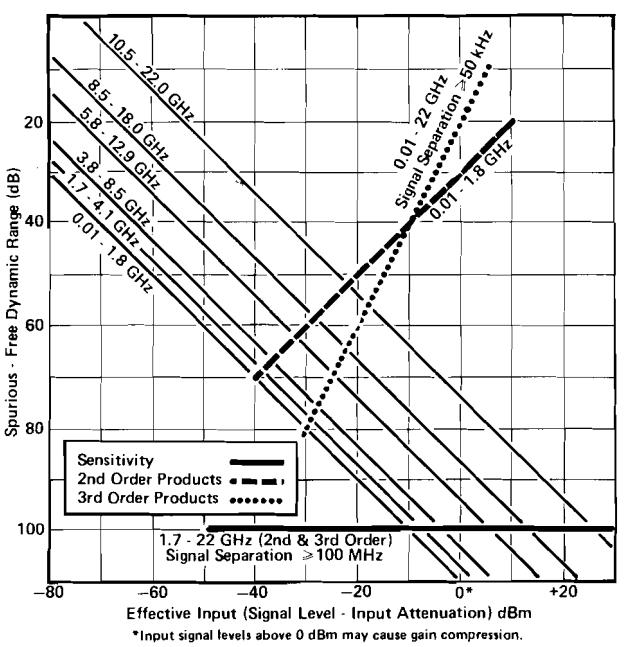

FIGURE 2. Optimum Dynamic Range Chart

AMPLITUDE ACCURACY

The overall amplitude accuracy of a measurement depends on an analyzer's performance and the measurement technique used. Applying IF substitution eliminates errors due to the display, bandwidth gain variation, scale factor and input attenuator step size. Only IF gain variation (reference level change with input attenuation constant: < ±1.0 dB), calibrator amplitude (< ±0.3 dB), and frequency response remain. In brief, IF substitution minimizes error by minimizing control changes from the reference measurement (e.g., calibration).

For measurements in the Frequency Bands covering 1.7 to 22 GHz that don't require the best possible accuracy, the front panel preselector peak may be left centered in its "green" setting. This adds typically < ±1.0 dB of error to the reference level value at room temperature.

Input Attenuator (at preselector input, 70 dB range in 10 dB steps)

Step size variation: <±1.0 dB .01 to 18 GHz
<±1.5 dB .01 to 22 GHz

Maximum cumulative error over the 0 to 70 dB range:
<±2.1 dB .01 to 12.4 GHz
<±2.4 dB .01 to 18 GHz
<±4.0 dB .01 to 22 GHz

Reference Level Variation (For any change of scale factor): *< ±1 dB.*

FREQUENCY RESPONSE AND SENSITIVITY

For typical frequency response and sensitivity versus input frequency, see Figure 3.

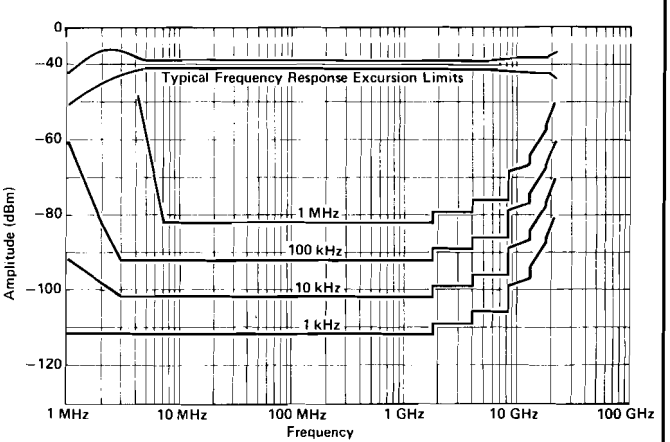

FIGURE 3. Average Noise Level vs. Input Frequency

Scans by ARTEK MEDIA =>

Table 1-2. Model 8565A Supplemental Characteristics (3 of 4)

SUPPLEMENTAL CHARACTERISTICS

NOTE: Values in this table are not specifications but are typical characteristics included for user information.

SIGNAL INPUT CHARACTERISTICS

INPUT 50Ω 0.01 TO 22 GHz

Input connector: *Precision Type N female*

Input impedance

Input attenuator at 0 dB: *50 ohms nominal*
SWR: *<1.5 0.01 to 1.8 GHz*
<2.0 1.7 to 22 GHz (at analyzer tuned frequency)
Input attenuator at 10 dB or more: *50 ohms nominal*
SWR: *<1.3 0.01 to 1.8 GHz*
<2.0 1.7 to 22 GHz

LO Emission (2.00 to 4.46 GHz):
−50 dBm 0.01 to 1.8 GHz
−85 dBm 1.7 to 22 GHz

Input Protection (For input signals from .01 to 22 GHz)
0.01 to 1.8 GHz Frequency Band: *Internal diode limiter.*
1.7 to 22 GHz Frequency Bands: *Saturation of YIG filter (preselector) occurs at total input signal power levels below input mixer damage.*

EXTERNAL MIXER INPUT

BNC female connector is a port for LO power transfer, bias current and IF return.

SWEEP CHARACTERISTICS

SWEEP SOURCE

Manual: *Sweep determined by front panel control; continuously settable across CRT in either direction.*

External: *Sweep determined by 0 to + 10V external signal applied to External Sweep Input on rear panel. Blanking is controlled by signal at Blanking Input.*

Internal: *Sweep generated from internal sweep generator.*

SWEEP TRIGGER

Free Run: *Sweep triggered repetitively by internal source.*

Line: *Sweep triggered by power line frequency.*

Video: *Sweep internally triggered by detected waveform of input signal (signal amplitude of 0.5 division peak-to-peak required on CRT display).*

Trigger Level: *Functions in the Video and Ext Trigger modes to set the level of the displayed trace or Ext Trigger Input which will trigger the sweep.*

External Trigger: *Sweep triggering determined by signal input (between +1 and +10 volts) to rear panel BNC connector.*

Single: *Sweep triggered or reset by front panel Start/Reset button.*

Start/reset: *Also can reset any internal sweep to left edge of display.*

REAR PANEL INPUT AND OUTPUT CHARACTERISTICS

X, Y, and Z Axis Outputs: These rear panel outputs are compatible with and may be used to drive all current HP XY recorders (using positive pencoils or TTL penlift input) and CRT monitors.

Horizontal Sweep Output (X axis): *A voltage proportional to the horizontal sweep of the CRT trace which ranges from −5 V for the left edge to +5 V for the right edge. Output impedance is 5kΩ.*

Vertical Output (Y axis): *Detected video output proportional to vertical deflection of the CRT trace. Output increases 100 mV/div from 0 to 800 mV (from a 50Ω source) for a full 8 division deflection. Output impedance is 50Ω.*

Blank (Penlift or Z axis) Output: *A blanking output, 15 V from 10 kΩ, which occurs during CRT retrace or when sweeping beyond band edges. Otherwise output is low at 0V with a 10Ω output impedance for a normal or unblanked trace (pen down).*

Blanking Input: *Permits remote Z axis control of CRT with TTL Levels; normal <0.5V or open circuit, blanked >2V.*

Caution: *maximum input ± 40V. 10 kΩ input impedance.*

External Sweep Input: *When the front panel Sweep Source switch is set to the EXT mode, a 0 to 10V ramp will sweep the analyzer through the frequency range determined by front panel Tuning and Frequency Span/Div controls. 100 kΩ input impedance.* ***Caution:*** *maximum input ±40 V.*

External Trigger Input: *With the Sweep Trigger in EXT mode, a signal will trigger a sweep on the signal's positive slope between +1 and +10 volts according to the setting of the Trigger Level control. 100 kΩ input impedance, dc coupled.*
Caution: *maximum input ±40V.*

21.4 MHz IF Output: *A 50 ohm, 21.4 MHz output linearly related to the RF input to the analyzer. Bandwidth controlled by the analyzer's Resolution Bandwidth setting; amplitude controlled by the Input Attenuator, IF gain vernier and first 6 IF Reference Level step gain positions (0 through −50 dBm level with 0 dB input attenuation). Output is approximately −10 dBm from 50Ω for full scale signals on the CRT.*

First LO Output: *Terminate in a 50Ω load when not in use.*

Frequency: *2.00 to 4.46 GHz*
Power Level: *typically at +8 dBm*
Stability (Typical residual FM):
Stabilized: 30 Hz P-P
Unstabilized: 2 kHz P-P

Aux A: *Interconnection for use with 8750A normalizer.*

Aux B: *Used during factory calibration.*

Scans by ARTEK MEDIA =>

Table 1-2. Model 8565A Supplemental Characteristics (4 of 4)

SUPPLEMENTAL CHARACTERISTICS

NOTE: Values in this Table are not specifications but are typical characteristics included for user information.

DISPLAY CHARACTERISTICS

CATHODE RAY TUBE

Type: *Post deflection accelerator, approximately 8.5 kV accelerating potential, aluminized P31 phosphor, electrostatic focus and deflection.*

Graticule: *8 x 10 division internal graticule, 1 division equals 0.90 cm (0.35 inches) with 5 subdivisions per major division.*

Persistence

Conventional: *Natural persistence of P31 phosphor (approximately 40 μsec).*

Write: *Continuously adjustable from 0.2 sec to full storage.*

Storage time: *> 1 minute at full brightness in Write mode extending to > 30 minutes in Store mode at lower brightness. Storage time (Store Intensity) in Store mode is continuously adjustable from 1 minute (full brightness) to >30 minutes (minimum brightness).*

Baseline Clipper: *Adjusts the vertical level below which the CRT is blanked. Helps prevent blooming by blanking the bright baseline area on the CRT. Eases analysis of pulsed RF and transient signals.*

Scale: *Turns on internal scale illumination for photography after erasing CRT. Frequency readout is frozen.*

Scale Intensity: *Adjusts scale illumination.*

CRT BEZEL READOUT

Light emitting diodes in the bezel display the following measurement data: (included in CRT photographs taken with the HP 197A Option 006 Oscilloscope Camera).

Top Line

Amplitude Scale: *Indicates the vertical scale factor chosen; linear (LIN), 10, 5, 2, or 1 dB/div.*

Reference Level: *Given in 1 dB increments from +70 dBm[1] to −102 dBm.*

Input Attenuation

Resolution Bandwidth

Bottom line

Sweep Time/Div: *A for Auto otherwise sweep times given in sec, msec, or μsec per division.*

Frequency: *Marker frequency displayed in 1.7-22 GHz and full band modes. Center frequency displayed for Per Div and Zero Span modes.*

Freq Span/Div: *F Hz for full band spans and 1.7-22 span, or horizontal calibration in MHz or kHz per division.*

[1]Maximum RF Input + 30 dBm.

Scans by ARTEK MEDIA =>

WARNING The WARNING sign denotes a hazard. It calls attention to a procedure, practice, or the like, which, if not correctly performed or adhered to, could result in injury or loss of life. Do not proceed beyond a WARNING sign until the indicated conditions are fully understood and met.

CAUTION The CAUTION sign denotes a hazard. It calls attention to an operating procedure, practice, or the like, which, if not correctly performed or adhered to, could result in damage to or destruction of part or all of the equipment. Do not proceed beyond a CAUTION sign until the indicated conditions are fully understood and met.

1-13. Service

1-14. Although this instrument has been manufactured in accordance with international safety standards, this manual contains information, cautions, and warnings which must be followed to insure safe operation and to keep the instrument safe. Service should be performed only by qualified service personnel, and the following warnings should be observed:

WARNINGS

Any maintenance or repair of the opened instrument under voltage should be avoided as much as possible, and when inevitable, should be carried out only by a skilled person who is aware of the hazard involved.

Capacitors inside the instrument may still be charged even if the instrument has been disconnected from its source of supply.

Make sure that only fuses with the required rated current and of the specified type (normal blow, time delay, etc.) are used for replacement. The use of repaired fuses and the short-circuiting of fuseholders must be avoided.

When it is likely that the protection has been impaired, the instrument must be made inoperative and be secured against any unintended operation.

If this instrument is to be energized via an auto-transformer (for voltage reduction) make sure the common terminal is connected to the earthed pole of the power source.

BEFORE SWITCHING ON THE INSTRUMENT, the protective earth terminals of the instrument must be connected to the protective conductor of the mains power cord. The mains plug shall only be inserted in a socket outlet provided with a protective earth contact. The protective action must not be negated by the use of an extension cord (power cord) without a protective conductor (grounding). Grounding one conductor of a two conductor outlet is not sufficient protection.

Any interruption of the protective (grounding) conductor (inside or outside the instrument) or disconnecting the protective earth terminal is likely to make this instrument dangerous.

CAUTIONS

BEFORE SWITCHING ON THIS INSTRUMENT, make sure instrument's ac input is set to the voltage of the ac power source (see Figure 2-1).

BEFORE SWITCHING ON THIS INSTRUMENT, make sure the ac line fuse is of the required current rating and type (normal-blow, time delay, etc.).

1-15. INSTRUMENTS COVERED BY MANUAL

1-16. Attached to the instrument is a serial number plate (Figure 1-2). The serial number is in two parts. The first four digits and the letter are the serial number prefix; the last five digits are the

Scans by ARTEK MEDIA =>

suffix. The prefix is the same for all identical instruments; it changes only when a change is made to the instrument. The suffix, however, is assigned sequentially and is different for each instrument. The contents of this manual apply to instruments with the serial number prefix(es) listed under SERIAL NUMBERS on the title page.

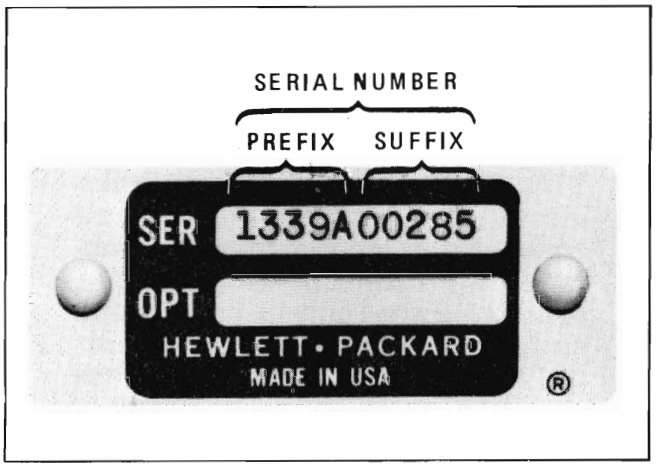

Figure 1-2. Typical Serial Number Plate

1-17. An instrument manufactured after the printing of this manual may have a serial number prefix that is not listed on the title page. This unlisted serial number prefix indicates the instrument is different from those described in this manual. The manual for this newer instrument is accompanied by a yellow Manual Changes supplement. This supplement contains "change information" that explains how to adapt the manual to the newer instrument.

1-18. In addition to change information, the supplement may contain information for correcting errors in the manual. To keep this manual as curent as possible, Hewlett-Packard recommends that you periodically request the latest Manual Changes supplement. The supplement for this manual is identified with this manual's print date and part number, both of which appear on the manual's title page. Complimentary copies of the supplement are available from Hewlett-Packard.

1-19. For information concerning a serial number prefix that is not listed on the title page or in the Manual Changes supplement, contact your nearest Hewlett-Packard office.

1-20. DESCRIPTION

1-21. The HP Model 8565A Spectrum Analyzer provides a visual display of RF signals in the frequency domain. Input signal amplitude is plotted on the CRT as a function of frequency.

1-22. The HP Model 8565A is designed for simplicity of operation. Most measurements can be made using only three controls once the green Normal Settings have been preset. The Model 8565A has absolute amplitude and frequency calibration from 10 MHz to 22 GHz. The frequency span, bandwidth, and video filter are all coupled with automatic sweep to maintain a calibrated display and simplify operation of the analyzer.

1-23. Internal preselection eliminates most spurious responses to simplify signal identification. The preselector also extends dynamic range of the analyzer as well as provides some protection for the input mixer.

1-24. All major spectrum analyzer parameters are displayed on the CRT bezel readout. The frequency range of the HP Model 8565A is 10 MHz to 22 GHz in direct coaxial input and 14.5 to 40 GHz when used with the HP Model 11517A External Mixer.

1-25. OPTIONS

1-26. Option 200

1-27. The HP Model 8565A Option 200 provides calibration in dBV. Front panel controls read in dBm as in standard instrument but bezel readout displays Reference Level in dBV. Reference Level is displayed in 1 dB increments from +177 dBV to +5 dBV.

1-28. Option 400

1-29. The HP Model 8565A Option 400 permits operation on 50, 60, or 400 Hz mains. All specifications are identical to standard Model 8565A except operating temperature range and power requirements (see Table 1)1).

1-30. Option 907 Front Handle Kit

1-31. Option 907, HP Part Number 5061-0090, contains front handles and necessary hardware for attaching the handles. See Figure 2-2 for installation procedure.

Scans by ARTEK MEDIA =>

1-32. Option 908 Rack Flange Kit

1-33. Option 908, HP Part Number 5061-0078, contains flanges and hardware required to mount the 8565A in an equipment rack with 482, 6mm (19 inches) horizontal spacing. See Figure 2-2 for installation procedure.

1-34. Option 909 Rack Flange/Front Handle Kit

1-35. Option 909, HP Part Number 5061-0084, consists of one Option 907 Front Handle Kit and one Option 908 Rack Flange Kit (see descriptions above.) See Figure 2-2 for installation procedure.

1-36. Option 910 Additional Operating and Service Manuals

1-37. Option 910 provides additional Operaing and Service manual(s). The number of additional manuals depends on quantity of Option 910's ordered. To obtain additional Operating and Service manuals after initial shipment, order by manual part number (refer to title page or rear cover of manual.

1-38. ACCESSORIES SUPPLIED

1-39. Figure 1-1 shows the HP Model 8565A Spectrum Analyzer and line power cord. Two 50-ohm terminations (HP11593A's) are also supplied. One termination is connected to the front-panel EXT MIXER port and the other is connected to the rear-panel 1st LO OUTPUT port.

1-40. EQUIPMENT AVAILABLE

1-41. Service Accessories

1-42. A Service Accessories Package is available for convenience in aligning and troubleshooting the specrum analyzer. The Service Accessories Package is shown in Figure 1-3. The package may be obtained from Hewlett-Packard by ordering HP Part Number 08565-60100.

1-43. Measurement Accessories

1-44. HP Model 11517A External Mixer. This mixer extends the frequency range coverage of the HP Model 8565A to 40 GHz. Transition sections (HP Model 11518, 11519A, and 11520A) are available to adapt the Model 11517A External Mixer to standard waveguide sizes.

1-45. HP Model 197A Option 006 Oscilloscope Camera. This camera can be used with the Model 8565A to make permanent records of your measurements. Photographs include the bezel readout information.

1-46. HP Model 8750A Storage-Normalizer. True long term storage and trace comparison make the Model 8750A a useful compliment to the HP Model 8565A's display.

1-47. HP Model K01-8565A Transit Case. This case protects the 8565A and provides a storage compartment for cables and reference booklets.

1-48. RECOMMENDED TEST EQUIPMENT

1-49. Equipment required for incoming inspection, performance testing and troubleshooting of the Hewlett-Packard Model 8565A is listed in Table 1-3. Other equipment may be substituted if it meets or exceeds the critical specifications listed in the table.

Scans by ARTEK MEDIA =>

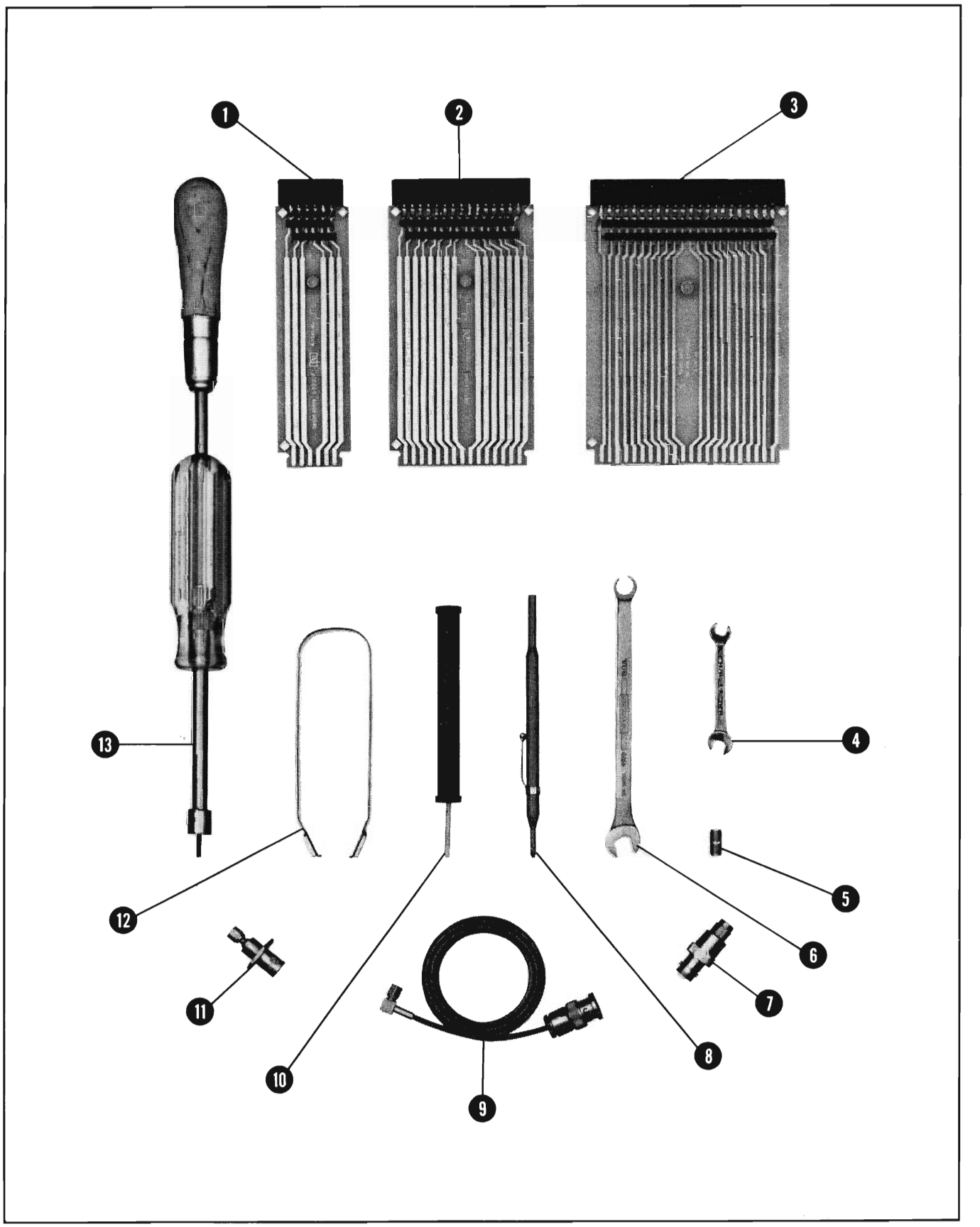

Figure 1-3. Service Accessories, HP Part Number 08565-60100 (1 of 2)

Scans by ARTEK MEDIA =>

Item	Description	HP Part Number
1	Extender board, 6 pin (12 conductors)	08505-60109
2	Extender board, 15 pin (30 conductors)	08505-60041
3	Extender board, 22 pin (44 conductors)	08565-60107
4	Wrench, 15/64 inch open end	8710-0946
5	Adapter, SMA male to male	1250-1158
6	Wrench, 5/16 inch slotted box end/open end	08555-20097
7	Adapter, BNC female to SMA male	1250-1200
8	Alignment tool	8710-0630
9	Test cable, subminiature (SMC) female to BNC male (36 inches long)	11592-60001
10	Alignment tool, non-metalic	8710-0033
11	Adapter, BNC female to SMC female (used to measure second LO output)	08565-60087
12	Connector extractor	8710-0580
13	Tuning tool (consists of modified 5/16 inch nut driver with modified No. 10 Allen driver)	08555-60107

Figure 1-3. Service Accessories, HP Part Number 08565-60100 (2 of 2)

Scans by ARTEK MEDIA =>

Table 1-3. Recommended Test Equipment (1 of 3)

Instrument	Critical Specifications	Recommended Model	Use*
Digital Multimeter	Range: −1000V to +1000V Accuracy: ±0.004% of reading plus 0.001% of range. Input impedance: 10 Meg ohms	HP 3490A	P, A
Oscilloscope	Frequency: 100 MHz Sensitivity: 5mV/Div	HP 1740A	A
Probe	High Voltage - 4KV	HP 34111A	A
Probe	10:1 Divider	HP 10004D	A
Probe	1:1 Divider	HP 10007D	A
Function Generator	Amplitude: 0 to +10V p-p sine wave with dc offset. Frequency: 1 to 5 kHz	HP 3312A	P, A
Pulse Generator	Transition time: 20 ns Pulse Width: 30 ns Pulse Repetition Rate: 100μs Amplitude: +4V p-p	HP 8002A	A
Signal Generator	Frequency: 50 to 500 MHz Modulation Frequency: 100 kHz Modulation Deviation: 1% of lowest frequency in range.	HP 8460B, Opt. 001	P, A
Time Mark Generator	Range: 5 ns to 10 sec Output: +1V peak; 50 Ohm Accuracy: ±0.005%	HP 226A	P, A
Frequency Counter	Range: .01 to 23 GHz	HP 5340A, Opt. H10	P, A
Comb Generator	Frequency Markers: 10 and 100 MHz increments up to 5 GHz	HP 8406A	P, A
Power Meter	Range: −20 to +10 dBm	HP 432A	P, A
Thermistor Mount	Frequency Range: .01 to 18 GHz	HP 8478B	P, A
Thermistor Mount	Frequency Range: 18 to 22 GHz	HP K486A	P, A
Spectrum Analyzer	Frequency: 300 MHz	HP 140T/8552B 8555A	A
Sweep Oscillator	Mainframe for RF Plug-In	HP 8620C	P, A

Scans by ARTEK MEDIA =>

Table 1-3. Recommended Test Equipment (2 of 3)

Instrument	Critical Specifications	Recommended Model	Use*
RF Plug-In	Frequency: 2 to 22 GHz	HP 86290A, Opt. H08	P, A
RF Plug-In	Frequency: .01 to 2.4 GHz	HP 86222A	P, A
Sweep Oscillator***	Mainframe for RF Plug-In	HP 8690B	P, A
RF Plug-In***	Frequency: 18 to 22 GHz	HP 8696A	P, A
Synchronizer	No substitute	HP 8709A, Opt. H10	A
Power Splitter	Frequency: 2 to 18 GHz Attenuation: 6 dB each arm Connectors: Type N Female Input APC-7 Outputs	HP 11667A, Opt. 002	P, A
Crystal Detector	Frequency: .1 to 22 GHz Input Connector: APC-3.5	HP 33330C	P, A
Mixer	Input Frequency: 23 GHz	HP 11517A	P
Adapter	K-Band to R-Band; for use with HP 11517A Mixer	HP 11519A	P
Directional Coupler***	Frequency: 18 to 22 GHz Nominal Coupling: 10 dB	HP K752C	P
Step Attenuator	Attenuation: 0 to 12 dB in 1 dB steps Frequency: 100 MHz, Calibrated	HP 355C, Opt. H80	P, A
Step Attenuator	Attenuation: 0 to 120 dB in 10 dB steps Frequency: 100 MHz, Calibrated	HP 355D, Opt. H80	P, A
Attenuator	Attenuation: 10 dB ±0.5 dB Frequency: .01 to 18 GHz Connectors: Type N	HP 8491B, Opt. 010	P, A
Attenuator	Attenuation: 10 dB ±0.5 dB Frequency: .01 to 18 GHz Connectors: APC-7	HP 8492A, Opt. 010	P
Termination	Frequency: dc to 18 GHz Impedance: 50 Ohms Connector: Type N Male	HP 909A, Opt. 012	P
Adapter**	BNC Female to SMC Female	HP 08565-60087	A
Adapter (2 required)****	Waveguide to SMA Jack	Narda 4608	P, A

Scans by ARTEK MEDIA =>

Table 1-3. Recommended Test Equipment (3 of 3)

Instrument	Critical Specifications	Recommended Model	Use*
Adapter	APC-7 to Type N Male	HP 11525A	P, A
Adapter	APC-7 to SMA Female	HP 11534A	P, A
Adapter	APC-7 to Type N Female	HP 11524A	P
Adpater	Type N Female to SMA Female	HP 08690-60005	P
Adapter	Type N to SMA	HP 1250-1250	P
Adapter (2 required)	Type N Male to BNC Female	HP 1250-0780	P
Adapter	Type N Female to BNC Male	HP 1250-0077	P
BNC Tee	Connectors: BNC Jack and Plug	HP 1250-0781	A
BNC Short	Impedance: 50 Ohms	HP 1250-0774	A
Cable Assembly	SMA Plug both ends	HP 8120-1578	P
Cable Assembly	Type N Connector both ends	HP 11500A	P
Test Cable**	SMA Female to BNC Male	HP 11592-60001	P

* P = Performance Test; A = Adjustments
** These parts are included in Service Package; HP Part Number 08565-60100.
*** Not required if HP 86290A, Opt. H08 used.
**** Only one required if HP 86290A, Opt. H08 used.

Scans by ARTEK MEDIA =>

SECTION II
INSTALLATION

2-1. INTRODUCTION

2-2. This section includes information on the initial inspection, preparation for use, storage/shipment instructions, and incoming inspection for the HP Model 8565A.

2-3. INITIAL INSPECTION

2-4. Inspect the shipping container for damage. If the shipping container or cushioning material is damaged it should be kept until the contents of the shipment have been checked for completeness and the instrument has been checked mechanically and electrically. The contents of the shipment should be as shown in Figure 1-1. Procedures for checking electrical performance are given in Section IV. If the contents are incomplete, if there is mechanical damage or defect, or if the instrument does not pass the electrical performance test, notify the nearest Hewlett-Packard office. If the shipping container is damaged, or the cushioning material shows signs of stress, notify the carrier as well as the Hewlett-Packard office. Keep the shipping materials for carrier's inspection. The HP office will arrange for repair or replacement without waiting for claim settlement.

2-5. PREPARATION FOR USE

2-6. Power Requirements

2-7. The Model 8565A requires a power source of 100, 120, 220, or 240 Vac +5% −10%, 48-66 Hz. Power consumption is less than 220 volt-amperes. The Model 8565A Option 400 permits operation on 50, 60, or 400 Hz mains at voltages specified above.

2-8. Line Voltage and Fuse Selection

WARNING

BEFORE THIS INSTRUMENT IS SWITCHED ON, its protective earth terminals must be connected to the protective conductor of the mains power cable (cord). The mains power cable plug shall only be inserted in a socket outlet provided with a protective earth contact. DO NOT negate the earth-grounding protection by using an extension cable, power cable, or autotransformer without a protective ground conductor. Failure to ground the instrument properly can result in personal injury.

CAUTION

BEFORE SWITCHING ON THIS INSTRUMENT, make sure it is adapted to the voltage of the ac power source. You must set the voltage selector card correctly to adapt the 8565A to the power source. Failure to set the ac power input of the instrument for the correct voltage level could cause damage to the instrument when switched on.

2-9. Select the line voltage and fuse as follows:

a. Measure the ac line voltage.

b. Refer to Figure 2-1. At the instrument's rear panel power line module, select the line voltage (100V, 120V, 220V, 240V) closest to the voltage you measured in step a. Line voltage must be within +5% or −10% of the voltage setting. If it is not, you must use an autotransformer between the ac source and the 8565A.

c. Make sure the correct fuse is installed in the fuse holder. The required fuse rating for each line voltage selection is indicated below the power line module.

Scans by ARTEK MEDIA =>

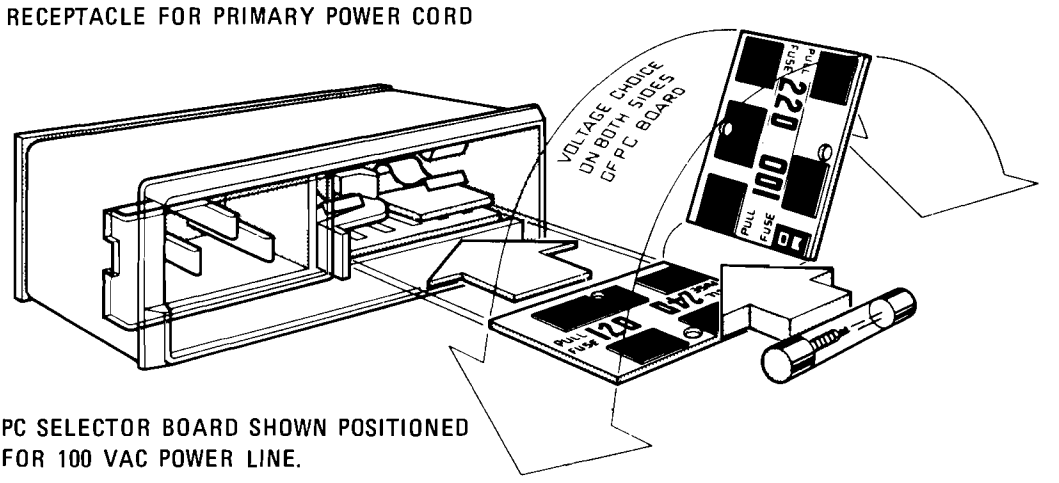

OPERATING VOLTAGE APPEARS IN MODULE WINDOW.

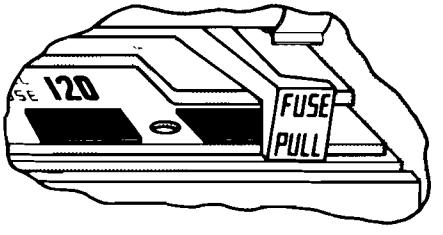

SELECTION OF OPERATING VOLTAGE

1. SLIDE OPEN POWER MODULE COVER DOOR AND PUSH FUSE-PULL LEVER TO LEFT TO REMOVE FUSE.
2. PULL OUT VOLTAGE-SELECTOR PC BOARD. POSITION PC BOARD SO THAT VOLTAGE NEAREST ACTUAL LINE VOLTAGE LEVEL IS ON TOP-LEFT SIDE OF BOARD. PUSH BOARD BACK INTO ITS SLOT.
3. PUSH FUSE-PULL LEVER INTO ITS NORMAL RIGHT-HAND POSITION.
4. CHECK FUSE TO MAKE SURE IT IS OF CORRECT RATING AND TYPE FOR INPUT AC LINE VOLTAGE. FUSE RATINGS FOR DIFFERENT LINE VOLTAGES ARE INDICATED BELOW POWER MODULE.
5. INSERT CORRECT FUSE IN FUSEHOLDER.

Figure 2-1. Line Voltage Selection with Power Module PC Board

Scans by ARTEK MEDIA =>

2-10. Cable Connections

2-11. Power Cable. In accordance with international safety standards this instrument is equipped with a three-wire power cable. When connected to an appropriate power line outlet, this cable grounds the instrument cabinet. Table 2-2 shows the styles of mains plugs available on power cables supplied with the HP instruments. The numbers for the plugs are part numbers for complete power cables.

WARNING

If this instrument is to be energized through an autotransformer, make sure the common terminal of the auto transformer is connected to the protective earth contact of the power source outlet socket.

Any interruption of the protective ground, inside or outside of the 8565A can make this instrument a shock hazard.

2-12. Mating Connectors

2-13. A list of connectors on the front and rear panels of the Model 8565A is given in Table 2-1. An industry identification, HP part number, and alternate source for the mating connector is given for each connector on the instrument.

2-14. Operating Environment

2-15. Temperature. The instrument may be operated in temperatures from 0°C to +55°C.

2-16. Humidity. The instrument may be operated in environments with humidity from 5% to 95% at 0° to 40°C. However, the instrument should also be protected from temperature extremes which cause condensation within the instrument.

2-17. Altitude. The instrument may be operated at altitudes up to 4572 metres (15000 feet).

2-18. Bench Operation

2-19. The instrument cabinet has plastic feet and foldaway tilt stands for convenience in bench operation. The tilt stands raise the front of the instrument for easier viewing of the control panel. The Plastic feet are shaped to make full width modular instruments self-aligning when stacked.

2-20. Rack Mounting (Option 908/909)

2-21. Instruments with Option 908 contain Rack Flange Kit. This kit supplies necessary hardware and installation instructions for preparing the instrument to be mounted on a rack of 482,6 mm

Table 2-1. Model 8565A Mating Connectors

Connector on Instrument	Mating Connector		
	Industry Identification	HP Part No.	Alternate Source
J11 INPUT 50Ω	Type N, male connector, UG-21G/U	1250-0882	Specialty Connector 25 P117-2
J12, J13 and J3 thru J10	Type BNC, male connector UG-88/U	1250-0256	Specialty Connector 28 P118-1
J1 AUX A	Series D, 24 contact, male connector	1251-2204	TRW Cinch Div. DDM-24W7P
J2 AUX B	Series D, 17 contact, male connector	1251-1285	TRW Cinch Div. DCMF-17W5P

Scans by ARTEK MEDIA =>

Table 2-2. AC Power Cables Available

Plug Type	HP Part Number	Plug Description	Cable Length (inches)	Cable Color	For Use In Country
	8120-1351 8120-1703	Straight 90°	90 90	Mint Gray Mint Gray	Great Britian Cyprus, Nigeria Rhodesia Singapore So. Africa, India
	8120-1369 8120-0696	Straight 90°	79 87	Gray Gray	Australia New Zealand
	8120-1689 8120-1692	Straight 90°	79 79	Mint Gray Mint Gray	East and West Europe, Saudi Arabia, United Arab Republic (unpolarized in many nations)
	8120-1348 8120-1398 8120-1754	Straight 90° Straight	80 80 36	Black Black Black	United States Canada Japan (100 or 200V) Mexico Phillippines Taiwan
	8120-1378 8120-1521 8120-1676	Straight 90° Straight	80 80 36	Jade Gray Jade Gray Jade Gray	
	8120-2104	Straight	79	Gray	Switzerland

Scans by ARTEK MEDIA =>

(19 inch) spacing. Installation instructions are also given in Figure 2-2. See Table 2-3 for HP Part Numbers.

2-22. Instruments with Option 909 contain Rack Flange Front Handle Kit. This kit supplies necessary hardware and installation instructions for preparing instrument, with the addition of front handles, to be mounted on a rack of 482,6 mm (19 inch) spacing. Installation instructions are also given in Figure 2-2. See Table 2-3 for HP Part Numbers.

2-23. Front Handles (Option 907)

2-24. Instruments with Option 907 contain front Handle Kit. This kit supplies necessary hardware and installation instructions for mounting front handles on the instrument.

2-25. INCOMING INSPECTION TEST

2-26. This test is designed to meet the needs of incoming inspection. The procedures shown in Figure 2-3 test the critical specifications of the HP Model 8565A Spectrum Analzyer. Equipment required to perform the incoming inspection is listed in Table 1-3. If substitution is necessary for any of the equipment, the alternate models must meet or exceed the critical specifications listed in Table 1-3.

2-27. The incoming inspection test varifies the critical specifications of the instrument. If complete certification is required, use the more detailed procedures in Section IV which test all of the specifications of the instrument.

2-28. STORAGE AND SHIPMENT

2-29. Environment

2-30. The instrument may be stored or shipped in environments within the following limits:

Temperature. . . . . −40°C to +75°C
Humidity . . . . . 5% to 95% at 0° to 40°C
Altitude . . . . . Up to 15240 metres (50000 feet)

The instrument should also be protected from temperature extremes which cause condensation within the instrument.

2-31. Packaging

2-32. Original Packaging. Containers and materials identical to those used in factory

Table 2-3. Rack-Mounting Kits for 8565A

Description	HP Part Number	Quantity
OPTION 908		
Rack Flange	5020-8863	2
Machine Screw, Pan Head, 8-32 x 0.375 inch	2510-0193	8
OPTION 909		
Handle Assembly	5060-9900	2
Rack Flange	5020-8875	2
Machine Screw, Pan Head, 8-32 x 0.625 inch	2510-0194	8

Scans by ARTEK MEDIA =>

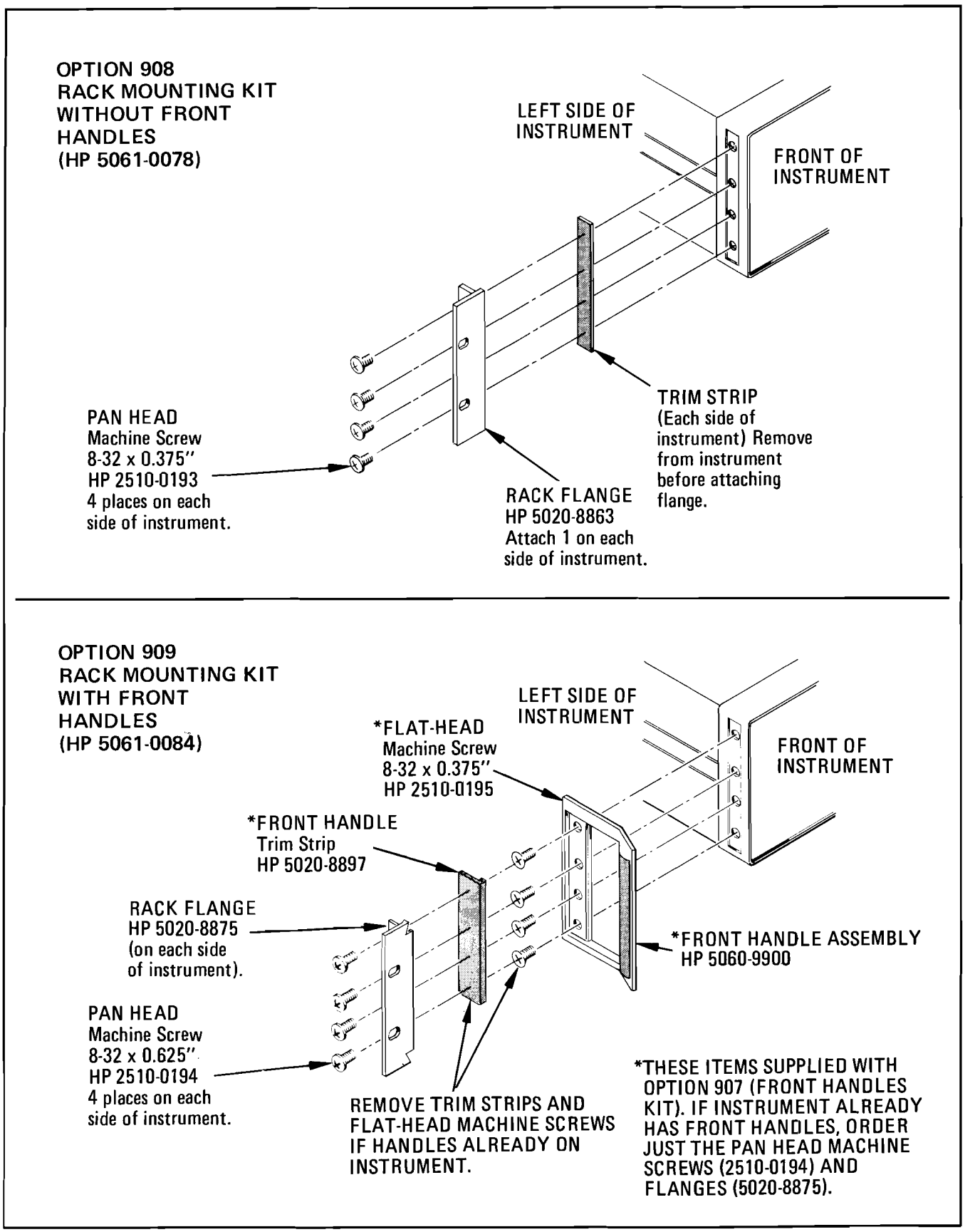

Figure 2-2. Attaching Rack Mounting Hardware and Handles

Scans by ARTEK MEDIA =>

packaging are available through Hewlett-Packard offices. If the instrument is being returned to Hewlett-Packard for servicing, attach a tag indicating the type of service required, return address, model number, and full serial number. Also, mark the container FRAGILE to assure careful handling. In any correspondence, refer to the instrument by model number and full serial number.

2-33. Other Packaging. The following general instructions should be used for repackaging with commercially available materials.

a. Wrap the instrument in heavy paper or plastic. (If shipping to a Hewlett-Packard office or service center, attach a tag indicating the type of service required, return address, model number, and full serial number.)

b. Use a strong shipping container. A double-wall carton made of 275 pound bursting strength corrugated single-wall box is sufficient.

c. Use enough shock-absorbing material (3 to 4 inch layer) around all sides of the instrument to provide firm cushion and prevent movement inside the container. Protect the control panel with cardboard.

d. Seal the shipping container securely.

e. Mark the shipping container FRAGILE to assure careful handling.

(To be Supplied)

Figure 2-3 Incoming Inspection

Scans by ARTEK MEDIA =>

SECTION III
OPERATION

3-1. INTRODUCTION

3-2. This operating section provides a basic introduction to signal analysis as well as detailed descriptions of how to use the HP Model 8565A. The information is presented in four chapters and five appendixes as follows:

a. Chapter 1: Operating the HP 8565A

b. Chapter 2: Detailed Control Operation

c. Chapter 3: Special Topics

d. Chapter 4: Typical Measurements

e. Appendix A: Operating Precautions

f. Appendix B: Control Glossary

g. Appendix C: Front Panel Adjustment Procedure

h. Appendix D: Theory of Operation

i. Appendix E: Amplitude Conversions

3-3. OPERATOR'S MAINTENANCE

3-4. Fuses. The 8565A has nine fuses, eight of which are internal. Only the ac line fuse located at the back of the instrument may be replaced by the operator. The ac line cord should be disconnected from the power source, then the other end disconnected from the instrument. With the power cord removed, access may be gained to the fuse compartment by sliding open the power module cover door. The fuse may be removed by pulling the lever inside the fuse compartment. Replace with fuse of correct rating and type for ac line voltage selected. Fuse ratings for different voltages are indicated below the power module. Access to the other eight fuses requires removing the instrument's covers. The internal fuses should only be replaced by a qualified service technician.

3-5. Air Filter. Inspect the rear-panel air filter frequently and, if necessary, remove and clean it. To clean the filter, wash it in warm water and detergent. Dry the filter thoroughly before reinstalling it on the instrument. Unrestricted air flow gives longest component life. Keep the air filter clean.

Scans by ARTEK MEDIA =>

BASIC DESCRIPTION

The HP 8565A is a high-performance spectrum analyzer designed for ease of use. Most measurements can be made with just three controls once the green Normal Settings are preset. The HP 8565A has absolute amplitude and frequency calibration from 0.01 to 22 GHz. The frequency span, bandwidth, and video filter are all coupled with automatic sweep to maintain a calibrated display and simplify use of the analyzer. Internal preselection eliminates most spurious responses to simplify signal identification. The preselector also extends the dynamic range of the analyzer as well as provides some protection for the input mixer. All major spectrum analyzer settings are displayed on the CRT bezel readout. The frequency range of the HP 8565A is 10 MHz to 22 GHz in direct coaxial input and 14.5 to 40 GHz when used with the HP 11517A External Mixer.

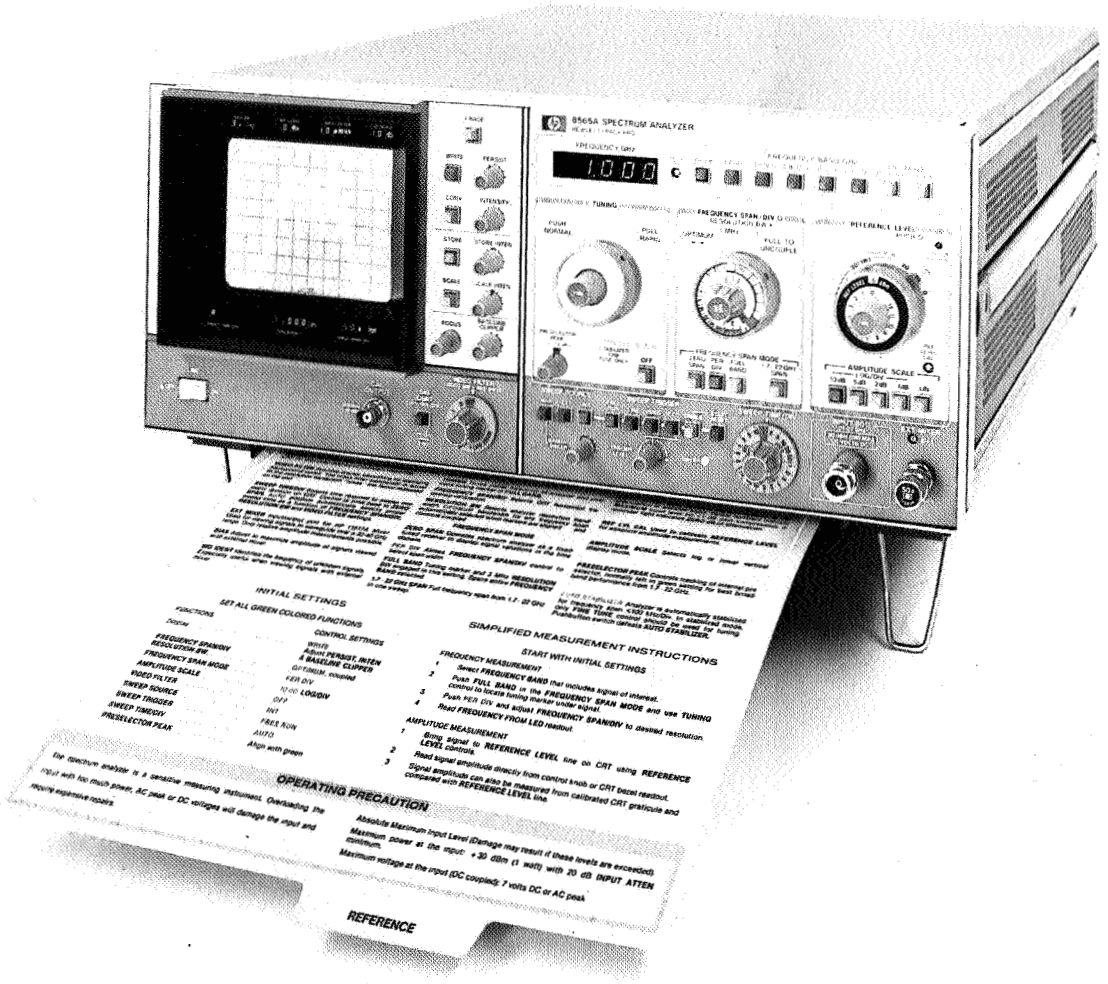

To aid in familiarization of the front panel controls, a fold-out illustration of the HP 8565A is included on page 24. Also any reference to the front panel controls are made in CAPITAL LETTERS.

Chapter I
OPERATING THE HP 8565A

The HP 8565A Spectrum Analyzer is a sensitive measuring instrument. To avoid damage to the instrument, do not exceed the following:

Absolute Maximum Inputs:[1]

Total Power: +30 dBm (1 watt)
DC: 0 V with 0 dB INPUT ATTEN
±7 V with ≥10 dB INPUT ATTEN
AC: (≪50 Ω nominal source impedance):
0 V with 0 dB INPUT ATTEN
10 V peak with ≥10 dB INPUT ATTEN

NORMAL SETTINGS

The Normal Settings are those settings which are used for the majority of measurements. For instance, 10 dB/DIV, INT sweep, and AUTO sweep time are most often used so they are classified as Normal Settings. All the Normal Settings on the HP 8565A are colored green so that the user can easily identify and set them initially. Table 1 lists all the green Normal Settings of the HP 8565A.

Table 1. Normal settings

Function	Setting
CRT DISPLAY	WRITE
BASELINE CLIPPER	OFF
FREQUENCY SPAN/DIV RESOLUTION BW	OPTIMUM ▶ ◀ (Push in to couple)
FREQUENCY SPAN MODE	PER DIV
AMPLITUDE SCALE	10 dB/DIV
VIDEO FILTER	OFF
SWEEP SOURCE	INT
SWEEP TRIGGER	FREE RUN
SWEEP TIME/DIV	AUTO
PRESELECTOR PEAK	Center in green area

With Normal Settings preset, most measurements can be made with just three knobs: TUNING, FREQUENCY SPAN/DIV, and REFERENCE LEVEL.

[1] For more detailed information regarding Operating Precautions, please refer to Appendix A.

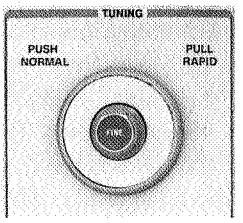

TUNING adjusts the center frequency of the analyzer. It also positions the marker in the full band modes.

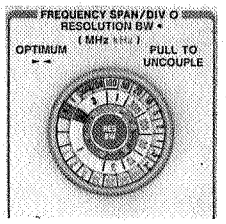

FREQUENCY SPAN/DIV sets the horizontal frequency calibration on the CRT. An optimum RESOLUTION BW is automatically selected for a given frequency span.

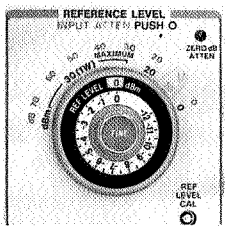

The REFERENCE LEVEL control sets the vertical amplitude calibration on the CRT. The REFERENCE LEVEL (top graticule line) on the CRT represents an absolute power level (in dBm). Changes in RF INPUT ATTEN will also change the indicated REFERENCE LEVEL.

SIMPLIFIED SIGNAL ANALYSIS

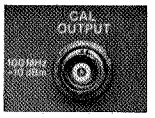

The internal CAL OUTPUT signal is a convenient source to demonstrate how fast and easy the HP 8565A can measure frequency and amplitude.

Start by presetting the green Normal Settings listed in Table 1, page 2. This sets the analyzer in its normal, three-knob operation mode. Now connect the CAL OUTPUT signal to the INPUT connector of the analyzer and begin the measurement procedure:

Initially, select the FREQUENCY BAND that includes the 100 MHz CAL OUTPUT signal:

Use the TUNING control to tune the 100 MHz signal to the center of the display. The FREQUENCY SPAN/DIV may be increased to facilitate tuning.

Once the signal is centered on the display, adjust the FREQUENCY SPAN/DIV to the desired resolution. Since there is no modulation on the CAL OUTPUT signal, a 1 MHz/DIV span is sufficient. Retune the signal to the center of the display if necessary.

Now position the peak of the signal on the REFERENCE LEVEL (top graticule line) of the CRT with the REFERENCE LEVEL control.

Since the CAL OUTPUT signal is the calibration reference for the analyzer, the center frequency should read 0.100 GHz and the REFERENCE LEVEL should read −10 dBm (Figure 2). If not, adjust the FREQ CAL and the REF LEVEL CAL to obtain the correct reading.[2]

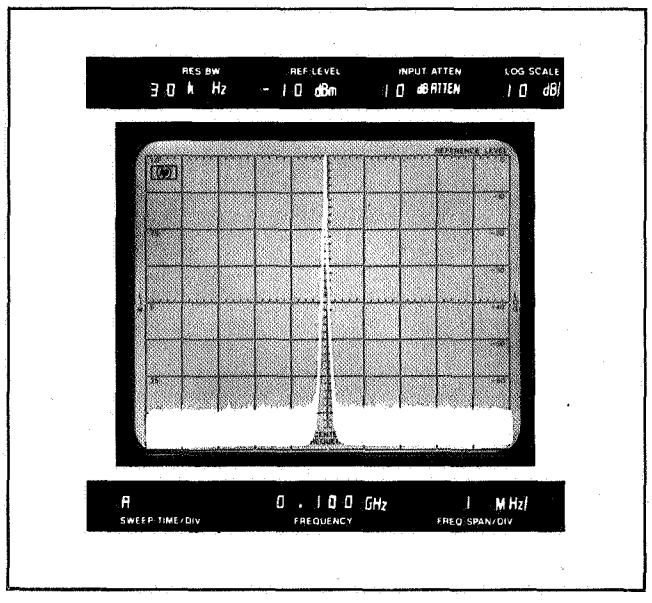

Figure 2. CAL OUTPUT signal

For this next example, let us suppose that the microwave source in the test set-up (Figure 3) operates in C-band (4 to 8 GHz). However, we do not know its exact output frequency. What, then, is the best way for locating a signal?

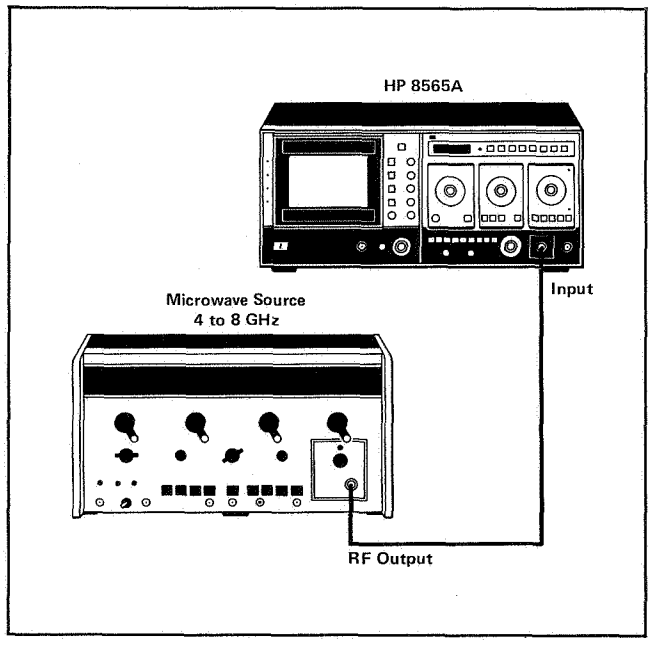

Figure 3. Microwave source test set-up

By using the FULL BAND feature of the HP 8565A, we can sweep an entire frequency band to search for a signal. Since we know that the microwave source in Figure 3 operates in C-band, the 3.8 to 8.5 GHz FREQUENCY BAND would be selected. A tuning marker (which appears in the full band modes) can be located under the signal to identify its frequency (Figure 4). Then by pushing the green PER DIV button, the signal at the marker will become the center frequency of the analyzer (Figure 5). In PER DIV the desired frequency span can be adjusted with the FREQUENCY SPAN/DIV control. Figure 6 graphically illustrates the procedure for locating a signal.

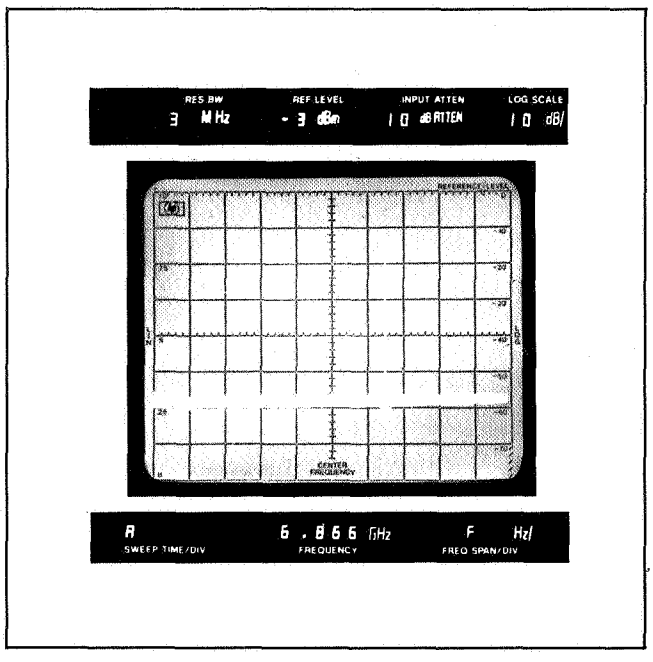

Figure 4. Tuning marker in FULL BAND

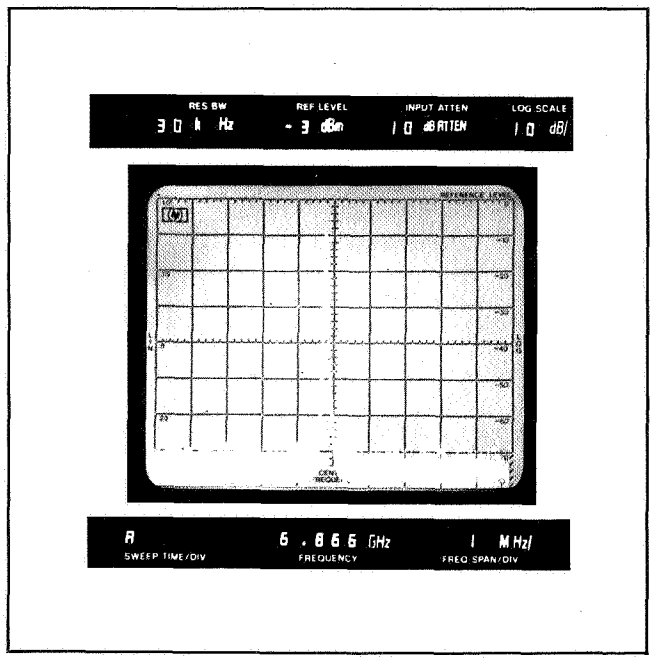

Figure 5. PER DIV mode

[2] A complete Front Panel Adjustment Procedure is included in Appendix C.

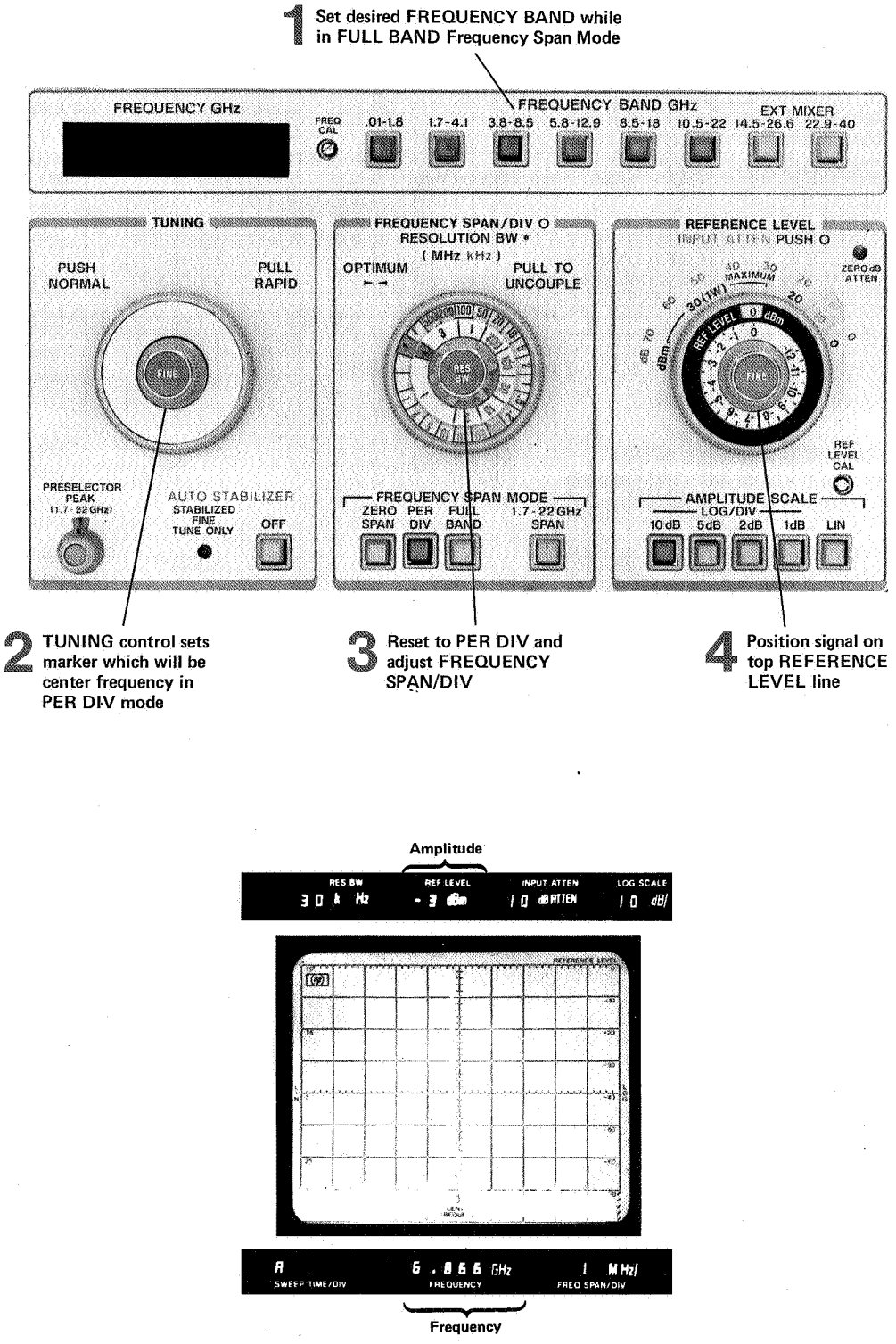

Figure 6. Locating a signal

Chapter 2
DETAILED CONTROL OPERATION

TUNING

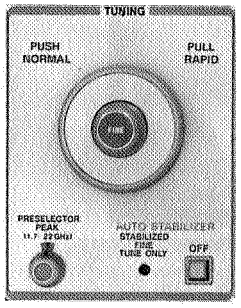

The TUNING control adjusts the center frequency of the analyzer. In the full band modes, the TUNING control is used to locate a marker under a particular signal. The FREQUENCY readout indicates the center frequency of the analyzer or the frequency at the tuning marker. By pulling out the outer control knob, *rapid* tuning is enabled. Rapid tuning is especially useful when moving the tuning marker in the full band modes. Normal tuning resumes when the knob is pushed in. When the analyzer is stabilized (frequency span ≤100 kHz/Div) only FINE TUNING should be used to tune the analyzer. If coarse tuning is desired, the AUTO STABILIZER can be disabled with the pushbutton switch.

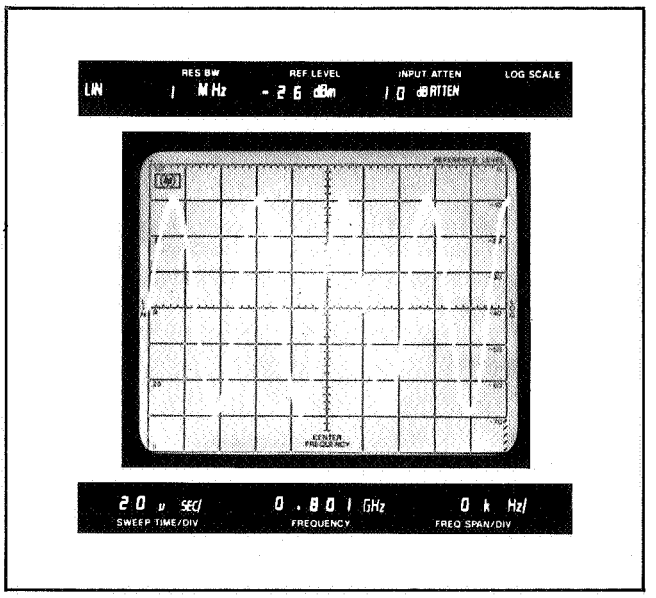

Figure 7. AM carrier demodulated in ZERO SPAN

FREQUENCY SPAN MODES

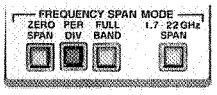

Four pushbutton span modes are available on the HP 8565A: ZERO SPAN, PER DIV, FULL BAND, and 1.7 - 22 GHz SPAN. Also, an additional F (full-band) setting is available on the FREQUENCY SPAN/DIV control knob. The full band modes, (FULL BAND, F, and 1.7 - 22 GHz SPAN) enable the analyzer to monitor the various frequency bands as well as a multi-octave coverage from 1.7 to 22 GHz. PER DIV is generally used for detailed signal analysis and ZERO SPAN is used for time domain analysis. The following text explains the various FREQUENCY SPAN MODE settings in more detail.

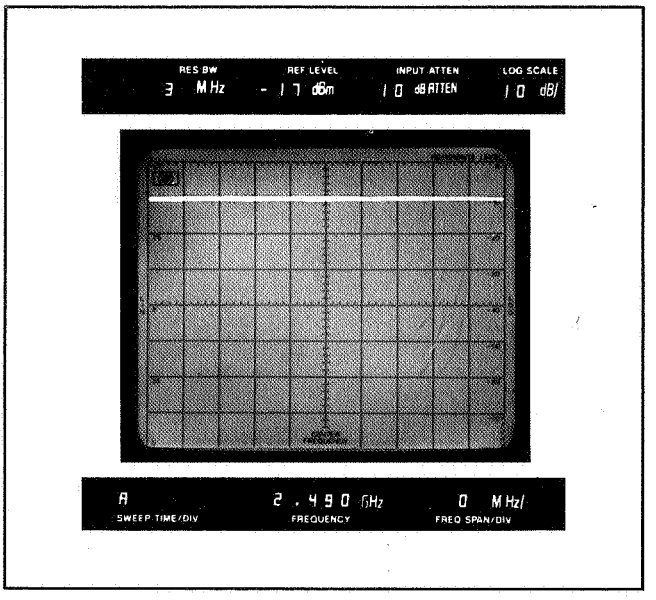

Figure 8. CW measurement in ZERO SPAN

Zero Span

ZERO SPAN is used when it is desired to recover the modulation on a carrier. In ZERO SPAN there is no sweep voltage applied to the LO in the analyzer; hence, it operates as a manually-tuned receiver. Carrier modulation will be displayed in the time domain and the calibrated SWEEP TIME/DIV control can be used manually to read the time variation of the signal. Selecting VIDEO trigger will allow the sweep to be synchronized on the demodulated waveform. Figure 7 is a display of a demodulated AM carrier that was obtained with the analyzer in ZERO SPAN.

Since the analyzer remains calibrated in ZERO SPAN, it is also possible to measure the amplitude and frequency of a CW signal. In this case, the CW signal appears as a horizontal line on the CRT (see Figure 8). Using a wide RESOLUTION BW setting and disabling the AUTO STABILIZER will allow the signal to be tuned to easily.

Per Div

The PER DIV mode enables the FREQUENCY SPAN/DIV control to set the horizontal frequency calibration of the CRT. The calibrated FREQUENCY SPAN/DIV control is adjustable from 1 kHz/DIV to 500 MHz/DIV. Also, an F (full band), position is available which allows the entire FREQUENCY BAND selected to be scanned. Normally, the RESOLUTION BW is optimally coupled (▶◀) to the FREQUENCY SPAN/DIV. Then the optimum RESOLUTION BW is automatically selected as the FREQUENCY SPAN/DIV is adjusted.

Full Band

The FULL BAND mode scans the entire FREQUENCY BAND selected in one sweep. A tuning marker, 3 MHz RESOLUTION BW and 0.003 VIDEO FILTER are automatically set in FULL BAND. Different FREQUENCY BANDs can be selected to look for unknown signals. Once a signal is located in a particular FREQUENCY BAND, the tuning marker can be positioned under the signal to identify its frequency (Figure 9). Then, by pushing PER DIV, the signal that was at the marker will be displayed as the center frequency on the CRT (Figure 10). The F position on the FREQUENCY SPAN/DIV control differs from the FULL BAND pushbutton in that it allows independent adjustment of RESOLUTION BW and VIDEO FILTER.

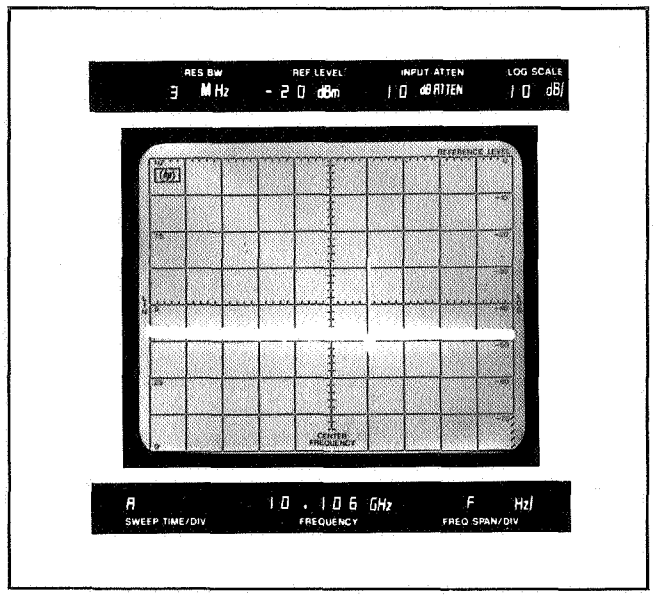

Figure 9. Identifying a signal in FULL BAND

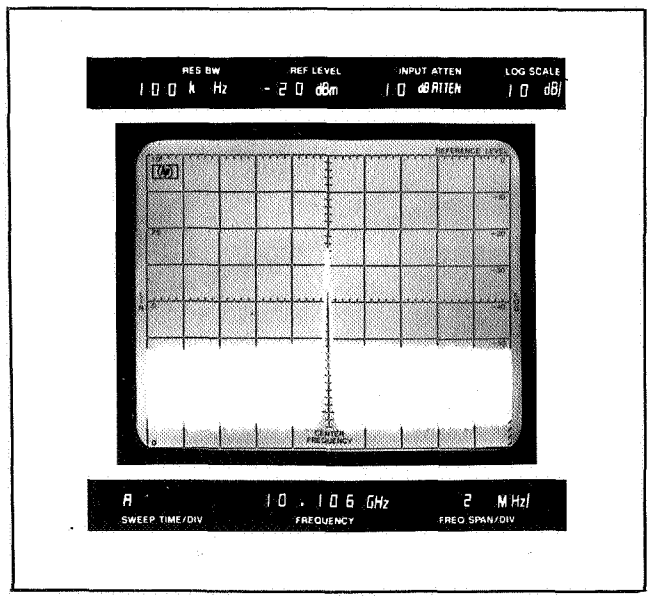

Figure 10. Analysis in PER DIV

1.7 - 22 GHz Span

A multi-band sweep is available when the 1.7 - 22 GHz SPAN pushbutton is depressed. This span mode is useful for observing signal activity within a broad frequency range. A tuning marker can be used with *rapid* TUNING to quickly identify the frequency of any signal in the 1.7 to 22 GHz range. Figure 11 illustrates a typical display using the 1.7 - 22 GHz SPAN mode.

The staircase baseline display is the result of gain compensation applied to the higher frequency bands to maintain a calibrated amplitude display. Gain compensation is required because the higher frequency bands utilize higher LO harmonics which yields reduced sensitivity.[3]

Table 2. Frequency Span Modes

			Full Band Modes		
	ZERO SPAN (Time Domain)	**PER DIV** (Close Analysis)	**On Freq Span/Div Control**	**FULL BAND**	**1.7 - 22 GHz SPAN**
TUNING MARKER	NO	NO	YES	YES	YES
FREQUENCY SPAN	ZERO (Manual Tune)	Selectable from 1 kHz/ DIV to 500 MHz/DIV	Depends on FREQUENCY BAND Selected	Depends on FREQUENCY BAND Selected	1.7 to 22 GHz
RESOLUTION BANDWIDTH	Selectable	OPTIMUM (▶◀) or Selectable	Selectable	Fixed at 3 MHz	Fixed at 3 MHz
VIDEO FILTER	Selectable	Selectable	Selectable	Fixed at 0.003 x 3 MHz = 9 kHz	Fixed at 0.003 x 3 MHz = 9 kHz

[3] To obtain the highest sensitivity from the analyzer, use the lowest FREQUENCY BAND available when there is a frequency overlap. For instance, a 7 GHz signal can be measured in the 3.8 to 8.5 GHz band or the 5.8 to 12.9 GHz band. The sensitivity however, is better in the 3.8 to 8.5 GHz band.

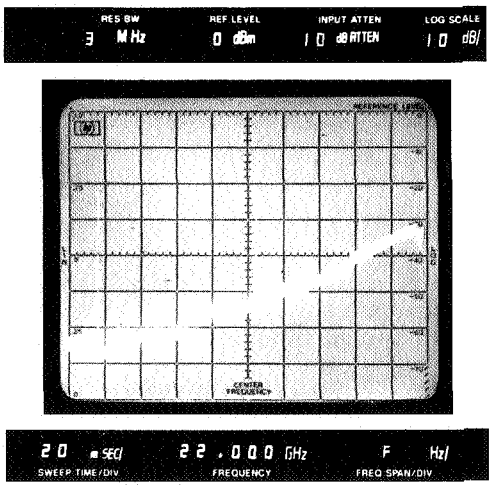

Figure 11. 1.7 - 22 GHz SPAN mode

The five frequency span modes available on the HP 8565A provide the user with maximum flexibility in making measurements. Table 2 summarizes the characteristics of each FREQUENCY SPAN MODE.

RESOLUTION BANDWIDTH

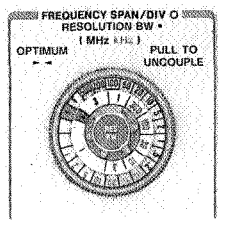

In Normal Setting, the RESOLUTION BW is optimally coupled to the FREQUENCY SPAN/DIV by aligning the green markers (▶ ◀) and pushing the controls in to couple. Once the controls are coupled at OPTIMUM, the best RESOLUTION BW will be automatically chosen for any frequency span selected. The RESOLUTION BW can also be coupled at a position other than OPTIMUM.

For certain applications, independent control of RESOLUTION BW may be desirable. By pulling out either control knob, the RESOLUTION BW will be decoupled thus allowing different RESOLUTION BW settings to be selected. Figure 12 illustrates how an AM signal with 200 kHz sidebands is displayed with various RESOLUTION BW settings. Also, note that the narrower RESOLUTION BW will yield increased sensitivity since random noise decreases 10 dB for every factor of 10 reduction in RESOLUTION BW.

The SWEEP TIME/DIV, when in AUTO position, will automatically select the proper sweep speed whether the RESOLUTION BW is coupled or uncoupled and operated independently.

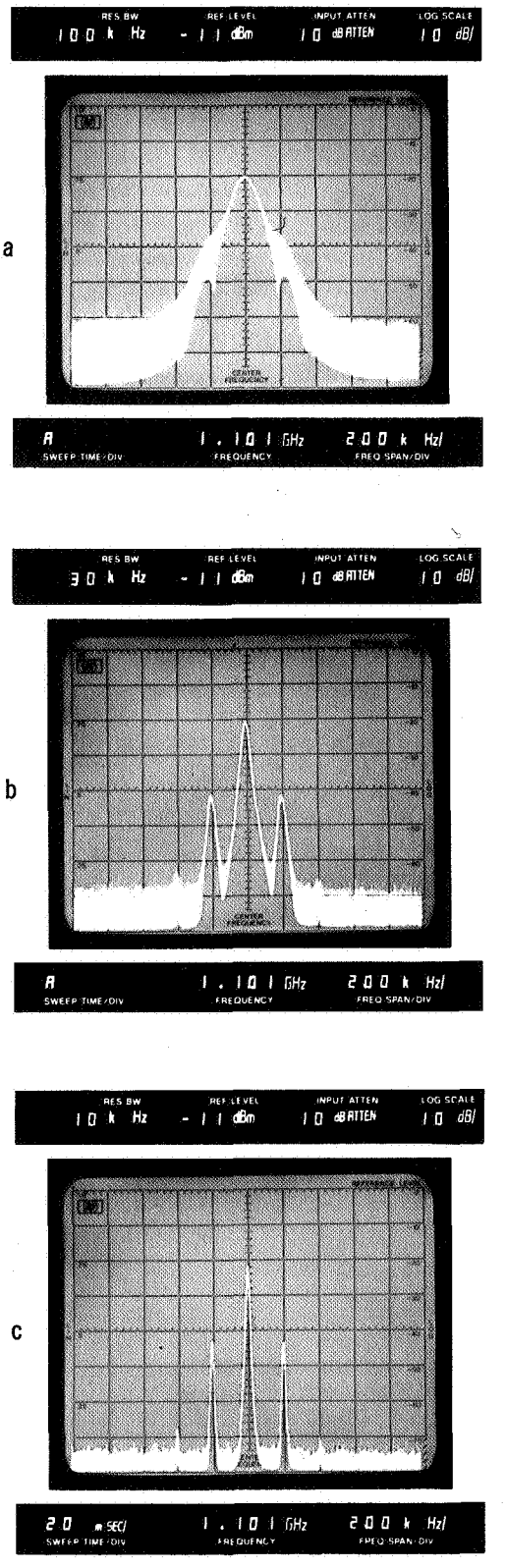

Figure 12. (a) 100 kHz RBW (b) 30 kHz RBW (c) 10 kHz RBW

REFERENCE LEVEL

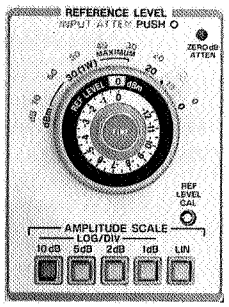

The main purpose of the REFERENCE LEVEL control is to set the absolute power of the REFERENCE LEVEL (top graticule line) on the CRT. When the peak of a signal is at the REFERENCE LEVEL, its absolute power (in dBm) will be indicated on the bezel readout as well as on the REFERENCE LEVEL control knob.

The REFERENCE LEVEL control, along with the INPUT ATTEN, has a range of 172 dB; from −102 dBm to +70 dBm. Although the REFERENCE LEVEL is calibrated from +30 to +70 dBm, signal levels should never exceed +30 dBm since that is the maximum power the analyzer can withstand without damage. In Figure 13, the REFERENCE LEVEL was adjusted to position f_1 on the REFERENCE LEVEL line of the CRT. The absolute power of f_1 then, is +30 dBm. The level at f_2 can be read from the calibrated CRT display as +30 dBm −50 dB = −20 dBm. If desired, a low-level signal can be positioned on the REFERENCE LEVEL line to read its power level directly on the bezel readout. f_3 in Figure 13 is positioned on the REFERENCE LEVEL line to read −80 dBm direct.

The REFERENCE LEVEL line on the CRT is determined by a combination of IF gain (REFERENCE LEVEL control) and RF attenuation (INPUT ATTEN). The outer control knob adjusts the IF gain in 10 dB steps. A FINE vernier knob provides continuous control from 0 to −12 dB.

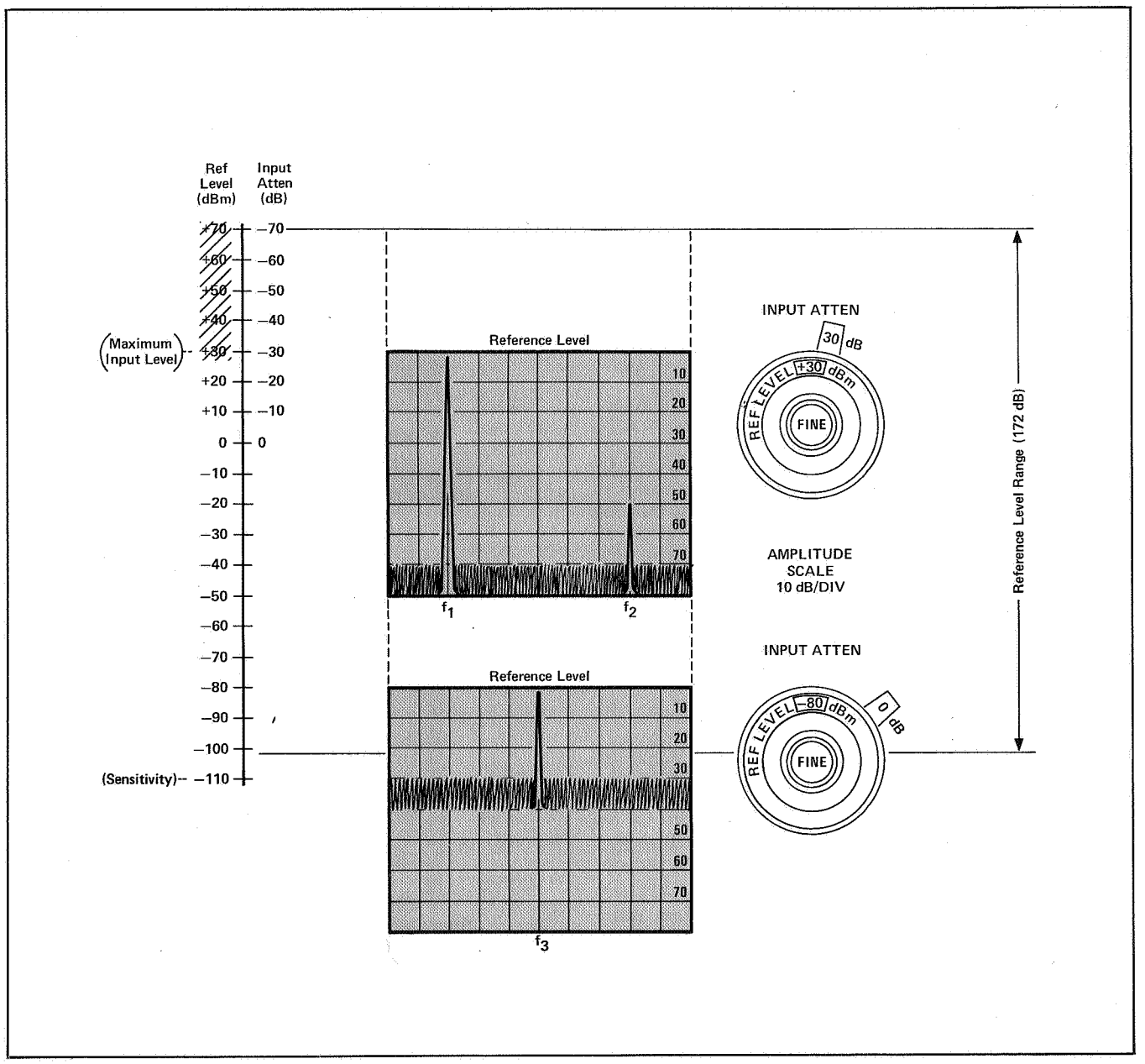

Figure 13. REFERENCE LEVEL control diagram

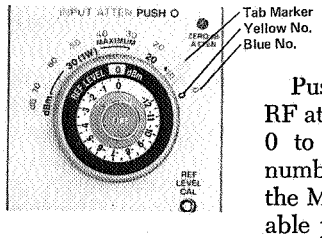

Pushing the outer knob in allows RF attenuation (blue numbers) from 0 to 70 dB to be selected. The numbers outlined in yellow indicate the MAXIMUM signal input allowable prior to signal compression.

A reminder light is lit whenever 0 dB INPUT ATTEN is selected. Unless making noise measurements or when maximum sensitivity is required, a minimum INPUT ATTEN of 10 dB should always be used. This insures a good input SWR and will minimize uncertainties due to mismatches.

VIDEO FILTER

The VIDEO FILTER control is used to average the noise displayed on the CRT. The VIDEO FILTER bandwidth is equal to the dial factor indicated multiplied by the RESOLUTION BW setting.

i.e. RESOLUTION BW = 30 kHz,
VIDEO FILTER = 0.01
then VIDEO FILTER = 0.01 x 30 kHz = 300 Hz.

If the RESOLUTION BW is changed to 10 kHz the VIDEO FILTER bandwidth will be 100 Hz. Thus, the VIDEO FILTER always varies as a percentage of the RESOLUTION BW.

The VIDEO FILTER is useful when observing a low-level signal that is close to the noise level. Figure 14 illustrates how use of the VIDEO FILTER control enables a low-level signal, close to the noise level, to be seen more clearly.

In addition, a NOISE AVG position on the VIDEO FILTER control allows the analyzer to make noise level measurements or to measure its own sensitivity (in a given RESOLUTION BW). The NOISE AVG position engages a 1 Hz low-pass filter to average the noise displayed on the CRT. Also the sweep time of the analyzer is increased to facilitate making noise level measurements.[4]

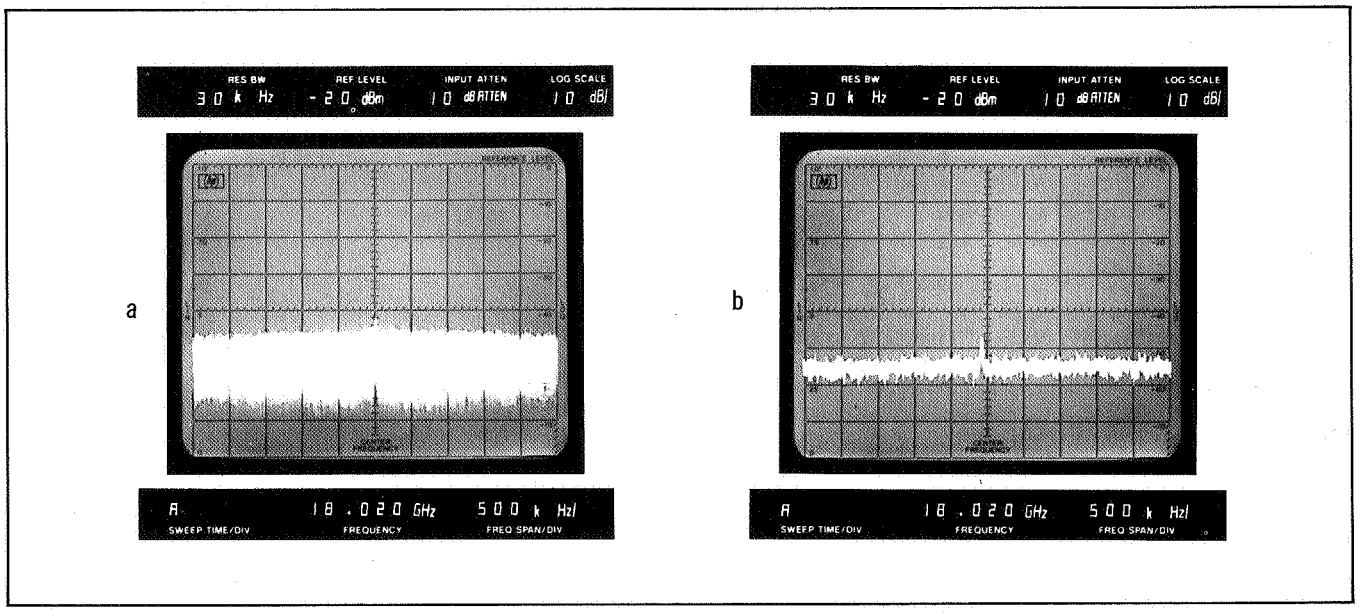

Figure 14. (a) VIDEO FILTER off (b) VIDEO FILTER = 0.003 × 0.10 kHz = 30 Hz

AUTOMATIC SWEEP TIME

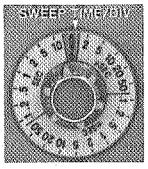

In the green AUTO position, the sweep time is automatically adjusted for any FREQUENCY SPAN/DIV, RESOLUTION BW, and VIDEO FILTER selected to maintain a calibrated amplitude display. One way to see the effect of AUTO SWEEP TIME/DIV is by decreasing the VIDEO FILTER bandwidth. The sweep rate will slow down automatically to allow the narrow VIDEO FILTER bandwidths more time to respond. Calibrated sweep times from 2 μsec/DIV to 10 sec/DIV are available when the SWEEP TIME/DIV control is switched out of the AUTO position and operated manually. The faster sweep times (2 μsec/DIV to 1 msec/DIV) are used only to display fast signal variations in the time domain (ZERO SPAN). A word of caution is necessary if the SWEEP TIME/DIV control is operated manually in PER DIV or in any full band modes. To insure that the amplitude calibration in the analyzer is maintained, observe changes in signal amplitude as the SWEEP TIME/DIV is changed. If the signal amplitude does not change, then the SWEEP TIME/DIV chosen is sufficient to allow the analyzer's bandwidth filters to fully respond. Additionally, the SWEEP TIME/DIV (AUTO or manual operation) will operate with any type of SWEEP TRIGGER as long as the INTernal SWEEP SOURCE is selected.

---

4 Because of detector and log amplifier characteristics, 2.5 dB should be added to obtain the correct noise power reading. See Hewlett-Packard Application Note 150-4 for details.

Chapter 3
SPECIAL TOPICS

OPTIMUM DYNAMIC RANGE

Dynamic range is defined here as the ratio of the largest signal to the smallest signal that can be at the input simultaneously with no analyzer distortion products. The "optimum" dynamic range is the point where the maximum distortion-free dynamic range can be achieved along with the maximum signal-noise ratio.

The optimum dynamic range on the HP 8565A can be determined by referring to Figure 17 on page 11. Three types of curves are presented on the chart; sensitivity (solid line), second-order distortion (dash line) and third-order distortion (dotted line). The sensitivity curves for the six internal frequency bands (0.01 - 22 GHz) have been normalized to a 1 kHz bandwidth. To use the sensitivity curves for different resolution bandwidths, simply subtract 10 dB from the signal-noise ratio reading for every factor of 10 increase in resolution bandwidth (i.e., a signal-noise ratio of 70 dB for a 1 kHz bandwidth would be 60 dB for a 10 kHz bandwidth). The second-order and third-order distortion curves are dependent on whether the 0.01 to 1.8 GHz or the 1.7 to 22 GHz frequency bands are used. Two vertical axes are used in Figure 17: Signal-Noise Ratio (left side) and Distortion-Free Dynamic Range (right side). The optimum dynamic range occurs at the intersection of the particular sensitivity and distortion curve under consideration. At this point the maximum Distortion-Free Dynamic Range is achieved with the maximum Signal-Noise Ratio.

Three major factors determine the optimum achievable dynamic range of the HP 8565A. They are:

1. Effective signal input
2. Frequency band
3. Signal separation

Let's examine each of these factors separately.

Effective Signal Input

The Effective Signal Input is simply the signal at the input minus the analyzer INPUT ATTEN setting. In equation form:

Effective Signal Input = signal input − INPUT ATTEN.

The horizontal axis on the dynamic range chart represents the Effective Signal Input.

Dynamic range varies as a function of Effective Signal Input. This is not as critical in the preselected 1.7 to 22 GHz frequency range. However, in the 0.01 to 1.8 GHz range, the Effective Signal Input (for optimum dynamic range) should be approximately −40 dBm when measuring second-order distortion products. Beyond this level, second-order distortion will increase 20 dB for every 10 dB increase in signal input. For third-order distortion measurements, the Effective Signal Input should be approximately −30 dBm. The optimum dynamic range in the 1.7 to 22 GHz band is achieved with an Effective Signal Input of approximately 0 dBm. This applies for both second-order and third-order distortion products.

Example: (Refer to Figure 17 on page 11.)

It is desired to measure the third-order distortion products from a device. The input signals are at 1456 MHz and 1466 MHz. Find the Effective Signal Input to obtain the optimum dynamic range.

Answer: The Effective Signal Input to achieve this is −30 dBm for each signal. Since this is a third-order measurement, we use the dotted third-order distortion curve applicable to the frequency range. Intersect this curve with the sensitivity curve that covers 0.01 to 1.8 GHz. The optimum dynamic range occurs at the intersection of the curves.

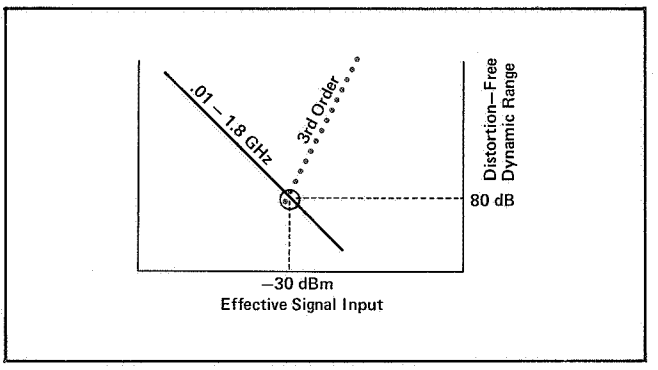

Frequency Bands

It can be seen that the dynamic range for the 1.7 to 22 GHz frequency range is generally much greater than for the 0.01 to 1.8 GHz range. This benefit is possible due to the tracking preselector in the HP 8565A. The preselector extends the dynamic range by allowing the analyzer to measure a low-level signal in the presence of a potentially interfering high-level signal. Since the preselector tracks the tuning of the analyzer, it only allows a signal to pass to the mixer when both preselector and analyzer are tuned to receive it. When the analyzer is tuned to the low-level harmonic, the preselector rejects the high-level fundamental, thus preventing internal distortion products from affecting the measurement.

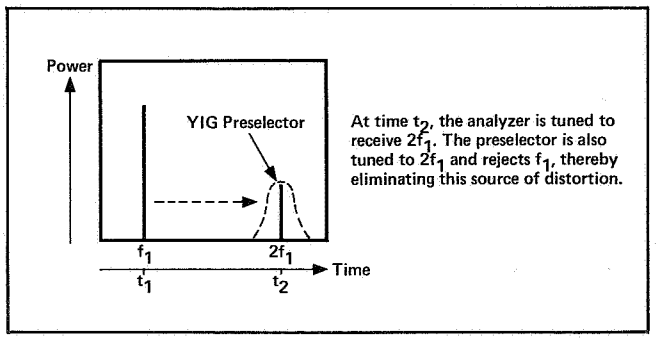

Figure 15. YIG preselector tuning

Signal Separation

In the preselected frequency bands (1.7 to 22 GHz) the tracking bandpass filter has a nominal 50 MHz bandwidth. For signal separation >100 MHz, the tracking filter will only allow one signal to pass to the mixer while simultaneously rejecting the other signal. This is illustrated in Figure 16: Since only one signal enters the analyzer at any instant in time, the analyzer will not generate any third-order distortion products. Also, for larger signal separation, the preselector will have more rejection and hence the dynamic range is greater.

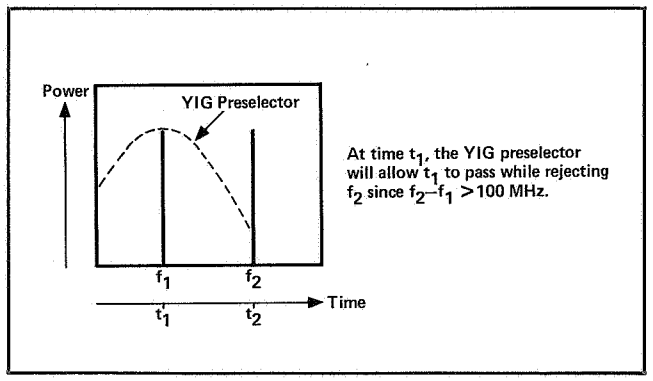

Figure 16. YIG preselector passband

Example:

It is desired to measure the third-order intermodulation products of a microwave amplifier. The two output signals are −10 dBm at 5.9 and 6.1 GHz. What is the dynamic range of the analyzer?

Answer: *93 dB*. Find the sensitivity curve for 3.8 to 8.5 GHz. Intersect this with the effective signal input at −10 dBm. The dynamic range of the analyzer is 93 dB.

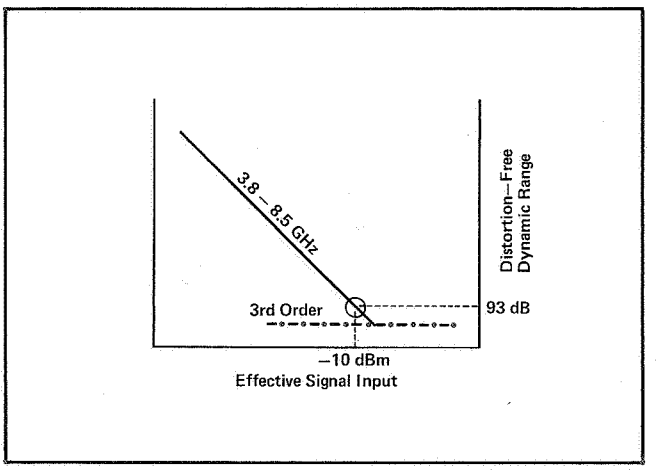

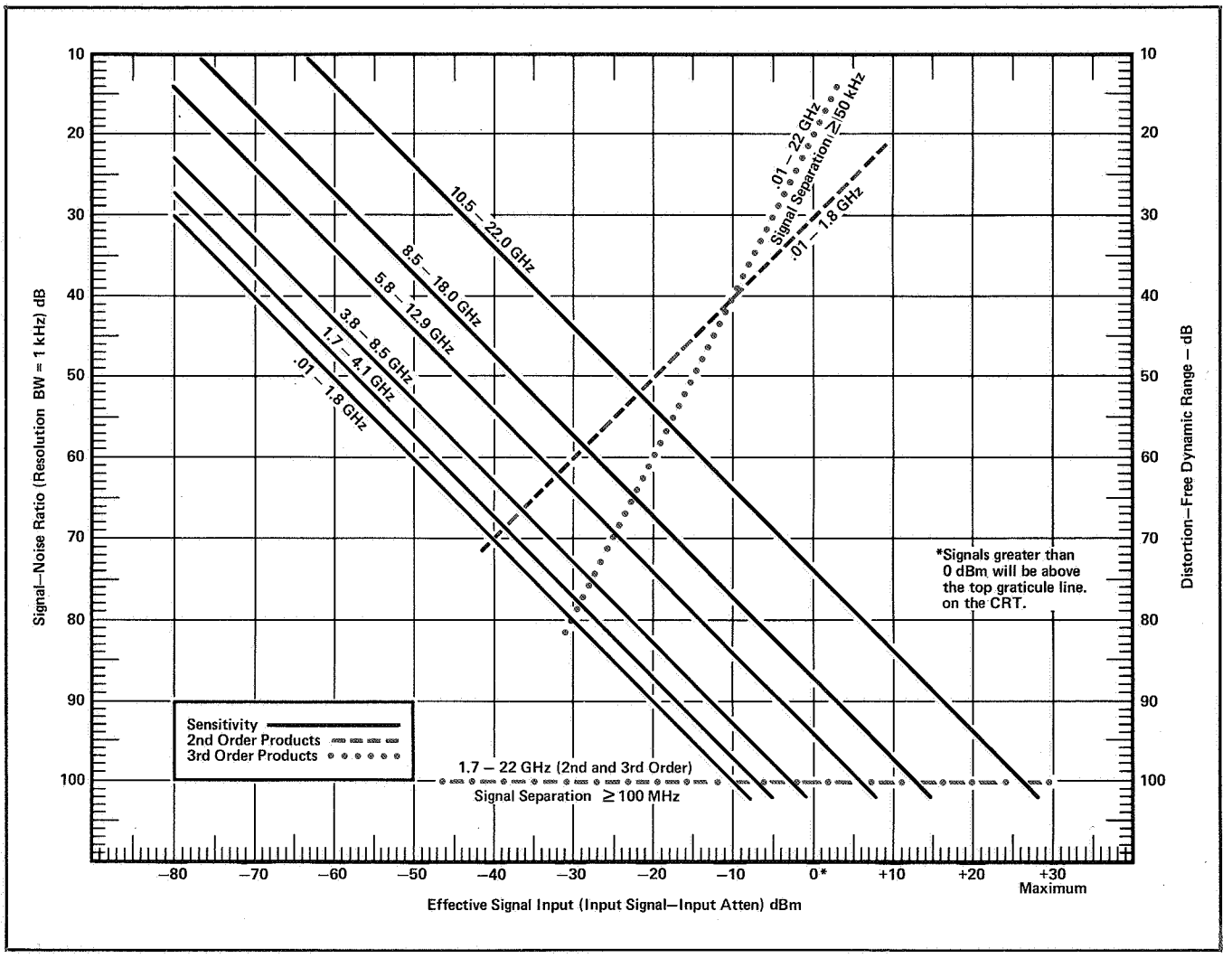

Figure 17. Dynamic range

Other constraints: When measuring distortion products associated with low-level signal inputs, the available signal strength will be the limitation. In this case, find the signal level on the Effective Signal Input (horizontal) axis and go vertically to the appropriate sensitivity curve. The maximum obtainable dynamic range is read from the Signal-Noise Ratio (vertical) axis.

IMPROVING MEASUREMENT ACCURACY

The technique known as IF substitution can be used to improve measurement accuracy on the HP 8565A. IF substitution is a method of using *only* the accurate IF gain of the analyzer to position the signal on the calibrated REFERENCE LEVEL line. In this way, errors due to the CRT non-linearity, log amplifier, input attenuator, and bandwidth filter will be eliminated. The IF gain of the analyzer is controlled with the calibrated REFERENCE LEVEL knob. The steps for achieving accurate amplitude measurements with IF substitution are as follows:

Amplitude Measurement With IF Substitution

1. Set the INPUT ATTEN to 10 dB or greater. This insures a good input SWR to minimize mismatch errors.
2. Set the FREQUENCY SPAN/DIV control to the desired frequency resolution.
3. Connect the CAL OUTPUT signal to the analyzer to verify calibration.
4. Disconnect the CAL OUTPUT signal and connect the signal to be measured.
5. Set the desired FREQUENCY BAND and use *only* the TUNING control to center the signal on the CRT.
6. In the 1.7 to 22 GHz frequency range, adjust the PRESELECTOR PEAK control to maximize the signal level.[5]
7. Now, using only the REFERENCE LEVEL control and FINE vernier, position the peak of the signal on the REFERENCE LEVEL line of the CRT. The signal amplitude is indicated by the REF LEVEL on the CRT bezel readout.

When the IF substitution technique is used for amplitude measurements, the only remaining measurement uncertainties are due to the CAL OUTPUT signal, flatness, and REFERENCE LEVEL control of the analyzer. Uncertainties due to RESOLUTION BW, INPUT ATTEN, log amplifier, and CRT non-linearities have been eliminated because they were left unchanged throughout the measurement.

[5] Normally, the best broadband tracking performance of the preselector is obtained with the PRESELECTOR PEAK control centered in the green area. However, for accurate power measurement, the PRESELECTOR PEAK control should be adjusted to maximize signal level.

Further accuracy improvement can be achieved by calibrating the analyzer at the same frequency to which the measurement will be made. This would eliminate any flatness uncertainties and the measurement accuracy would only be dependent upon the accuracy of the calibration signal and the REFERENCE LEVEL control.

CRT PHOTOGRAPHY AND X-Y RECORDING

CRT Photography

The CRT bezel readout on the HP 8565A provides an excellent means of information retention with use of any compatible scope camera. Since the display has readouts for all major spectrum analyzer settings, the need for additional writing on the photograph is largely eliminated. Also, interference between trace and characters is not a problem since the LED's are built into the CRT bezel. (See Figure 18.)

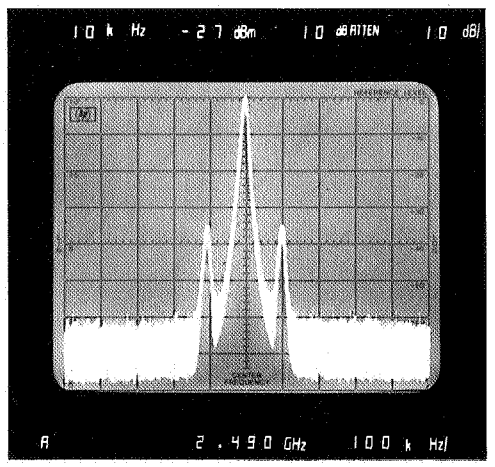

Figure 18. CRT display with bezel readout

The photo in Figure 18 is a double exposure which was taken with a camera that has variable shutter speed and f-stop. A double exposure provides the best contrast between signal trace, graticule lines, and CRT bezel readout. A step-by-step procedure for double-exposure photography is given below. These steps are applicable with the HP 197A or other compatible scope cameras:

Double Exposure Photography

1. Set the HP 8565A STORE INTEN and SCALE INTEN to the calibrated blue markings.
2. Set the camera shutter speed to 1 second and the f-stop to 16.

3. Push the STORE button on the analyzer to store the trace.[6] Press shutter on camera to take first exposure.

4. Push the SCALE button on the analyzer to illuminate the graticule lines.[7] Wait 2 seconds for display to fully erase. Press shutter on camera to take second exposure.

X-Y Recording

The HP 8565A is directly compatible with HP's line of X-Y recorders as well as strip-chart, digital, or magnetic tape recorders. The VERTICAL OUTPUT, BLANK OUTPUT, and HORIZONTAL SWEEP OUTPUT are all available from the rear panel of the analyzer. X-Y recorders can provide full-size (up to 11″ x 14″) copies with high resolution that are more applicable for folders or lab reports. Also, they can be reproduced easier than photographs and thus provide additional copies at minimal cost. Figure 19 illustrates a typical set-up used for X-Y recording.

The bandwidth of most X-Y recorders is very narrow; typically 1 to 2 Hz. This narrow bandwidth requires a sweep rate that is slow enough for the recorder to fully respond to a signal. In general, a sweep rate of 2 sec/div is sufficient for the majority of X-Y recorders. The SINGLE or the MANUAL sweep mode on the HP 8565A can be used to control the sweep.

Additional detailed information on CRT Photography and X-Y recording can be obtained from Hewlett-Packard Application Note 150-5.

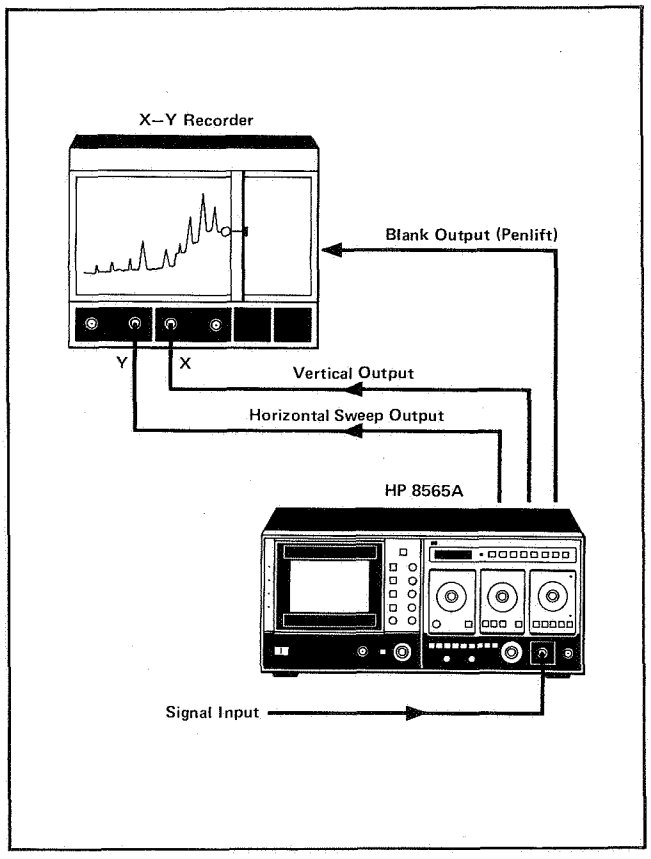

Figure 19. X-Y recording

[6] When the STORE or SCALE button is pushed, the FREQUENCY readout on the CRT bezel is fixed in its last reading. This insures that the FREQUENCY reading will not change while the camera shutter is opened.

[7] The SCALE button simultaneously erases the trace and illuminates the graticule lines.

EXTERNAL MIXER OPERATION

Calibrated frequency coverage from 14.5 to 40 GHz can be achieved by using the HP 11517A External Mixer with the appropriate waveguide adapter listed in Table 3. The external mixer connects to the EXT MIXER port on the front panel of the HP 8565A with a BNC coaxial cable. Setting the corresponding FREQUENCY BAND will allow frequency coverage in two ranges: 14.5 to 26.6 GHz or 22.9 to 40 GHz.

Table 3. External mixer components

HP Model Number	Description	HP Band Designation
11517A	12.4 - 40 GHz Mixer	
11518A	12.4 - 18 GHz Adapter	P
11519A	18 - 26.5 GHz Adapter	K
11520A	26.5 - 40 GHz Adapter	R

A connection diagram of the HP 8565A with the HP 11517A External Mixer and adapter is illustrated in Figure 20.

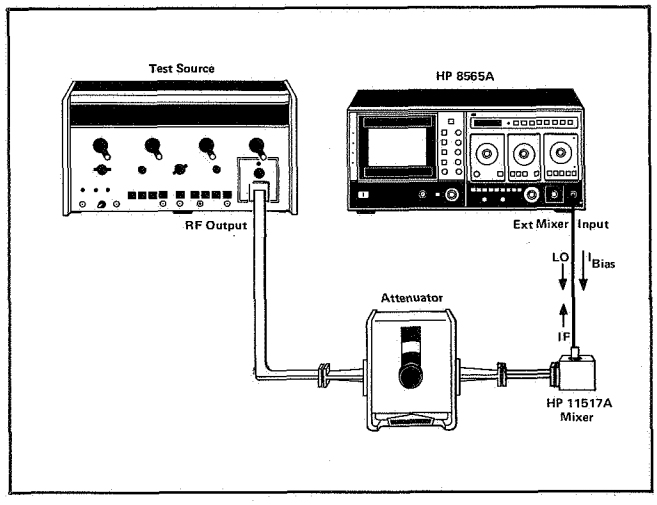

Figure 20. External mixer test set-up

The EXT MIXER port is somewhat unique in that it transceives three signals. The LO and a bias current (I_{bias}) exit to the HP 11517A and the IF is received back at the EXT MIXER port. Filter networks at the EXT MIXER port separate the unwanted RF signals from the desired IF product. The BIAS control is adjusted to optimize the signals viewed with the external mixer.

In operation, the HP 11517A External Mixer bypasses the input attenuator, preselector, and the calibrated internal mixer of the analyzer. Hence, three things must be remembered when using the external mixer:

1. The INPUT ATTEN has no effect on input signals.

2. Harmonic mixing responses must be properly identified since there is no preselection in the EXT MIXER bands.

3. Amplitude measurements are uncalibrated unless steps are taken to calibrate the analyzer.

Signal Identification

To properly identify a signal on the CRT, the SIG IDENT on the HP 8565A is used. To use the SIG IDENT, center the unknown response on the CRT and set the FREQUENCY SPAN/DIV to 1 MHz. Then depress the SIG IDENT pushbutton and note if the response resembles Figure 21. If the response moves two divisions to the left and drops in amplitude, then it is the correct signal and its frequency is indicated on the LED display. If the response does not identify correctly, then tune to another response and use the SIG IDENT once again to identify it.

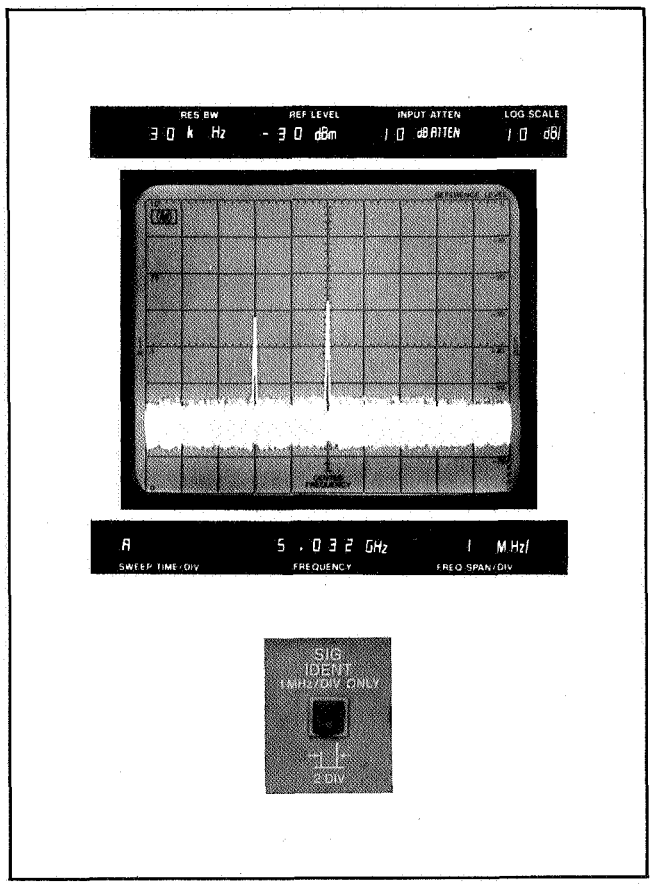

Figure 21. Signal identifier

Amplitude Calibration of External Mixer

The analyzer can easily be calibrated to read absolute power if a reference signal is available in the frequency range of interest. This is done by using both the INPUT ATTEN control and the REF LEVEL CAL adjustment on the analyzer. Since the INPUT ATTEN is bypassed in EXT MIXER operation, it has no effect on the signal but will change the REF LEVEL readout. Thus the INPUT ATTEN control provides a method of calibrating the analyzer to within ±5 dB (attenuator has 10 dB steps) of the reference signal. To adjust between the ±5 dB limit, use the REF LEVEL CAL adjustment to bring the display into an absolute power calibration. A step-by-step procedure for calibrating the analyzer to measure absolute power up to 40 GHz with the HP 11517A mixer follows:

Procedure

1. Set up equipment as shown in Figure 20.
2. Connect reference signal to external mixer and select corresponding EXT MIXER frequency band to be calibrated.
3. Use SIG IDENT to verify that reference signal is correct response.
4. Peak the reference signal displayed on the analyzer with the BIAS control. Adjust to the maximum peak since it is normal to see more than one peak occur.
5. Set the INPUT ATTEN to 0 dB and the REF LEVEL FINE control to 0 dB.
6. Position the reference signal as close as possible to the REFERENCE LEVEL line using only the coarse REFERENCE LEVEL control.
7. Since the amplitude of the reference signal is known, adjust the INPUT ATTEN to obtain the correct amplitude reading on the CRT bezel readout. If the reference signal is not in *even* 10 dB increments (i.e., −20 dBm, −30 dBm) then it will be necessary to adjust the REF LEVEL FINE control to obtain the correct REF LEVEL readout.
8. At this point, the REF LEVEL readout on the bezel should read the amplitude of the reference signal. Also, the signal should be positioned within ±5 dB of the REFERENCE LEVEL line. The final step is to position the reference signal on the REFERENCE LEVEL line by using the REF LEVEL CAL adjustment.

Once the reference signal is at the REFERENCE LEVEL line and the REF LEVEL reading equals the absolute value of the reference signal, the analyzer will be amplitude calibrated for that particular EXT MIXER band.

Note: If the REF LEVEL CAL adjustment was used to calibrate the EXT MIXER band, then the analyzer must be recalibrated to its internal CAL OUTPUT signal for the 0.01 to 22 GHz frequency range.

Additional information on external mixer measurements can be obtained from AN 150-12.

Chapter 4
TYPICAL MEASUREMENTS

DISTORTION

Distortion measurement is an area where the spectrum analyzer makes a significant contribution. There are two basic types of distortion that are usually specified by the manufacturer: harmonic distortion and two-tone, third-order intermodulation distortion. The third-order intermodulation products are represented by: $2f_1 - f_2$ and $2f_2 - f_1$ where f_1 and f_2 are the two-tone input signals.

The HP 8565A can measure harmonic distortion products up to 100 dB down in the 1.7 to 22 GHz frequency range. Third-order intermodulation products can also be measured up to 100 dB down, depending on signal separation and frequency range. In all, the HP 8565A is capable of making a wide variety of distortion measurements with speed and precision.

Amplifiers

All amplifiers generate some distortion at the output and these distortion products can be significant if the amplifier is overdriven with a high-level input signal. The test set-up in Figure 22 was used to measure the third-order intermodulation products of a microwave FET (Field-Effect Transistor) amplifier. Directional couplers and attenuators were used to provide isolation between sources.

Figure 23 is a CRT photo of a two-tone, third-order intermodulation measurement. The third-order products ($2f_1 - f_2$ and $2f_2 - f_1$) are 50 dB below the two-tone signals (f_1 and f_2).

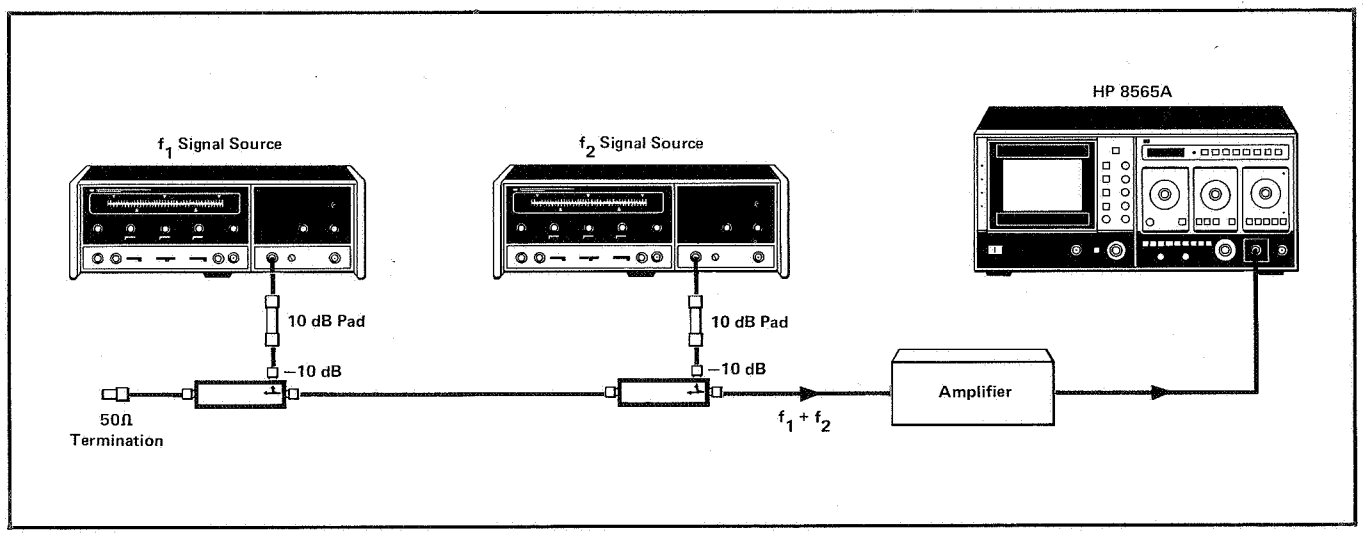

Figure 22. Two-tone test set-up

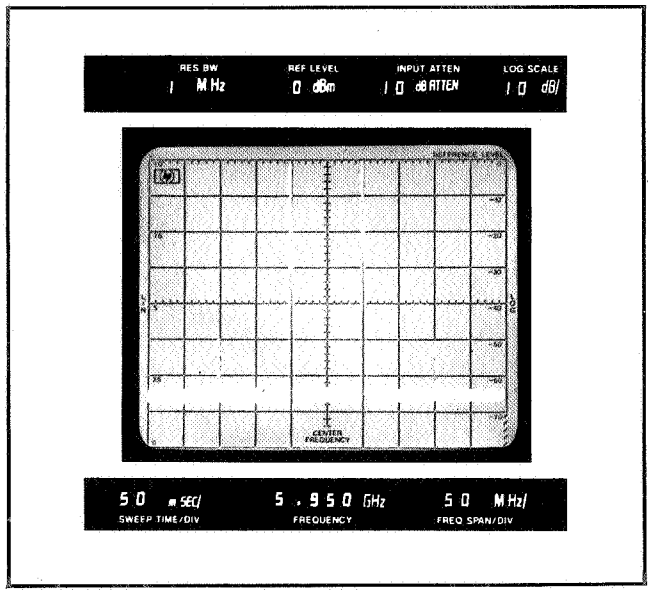

Figure 23. Two-tone, third-order intermodulation products

Mixers

Mixers utilize the non-linear characteristics of an active or passive device to achieve a desired frequency conversion. This results in some distortion at the output due to the inherent non-linearity of the device. Figure 24 illustrates the test set-up and CRT photograph of a typical mixer measurement.

From a single display, the following information was determined:

Conversion loss (SSB):
$(RF_{in}) - (IF) = (-30) - (-40) = 10$ dB

LO to IF Isolation:
$LO_{in} - LO_{out(IF)} = (+5) - (-25) = 30$ dB

RF to IF Isolation:
$RF_{in} - RF_{out(IF)} = (-30) - (-57) = 27$ dB

Third-Order Distortion Product (2 LO − RF):
−64 dBm @ 600 MHz.

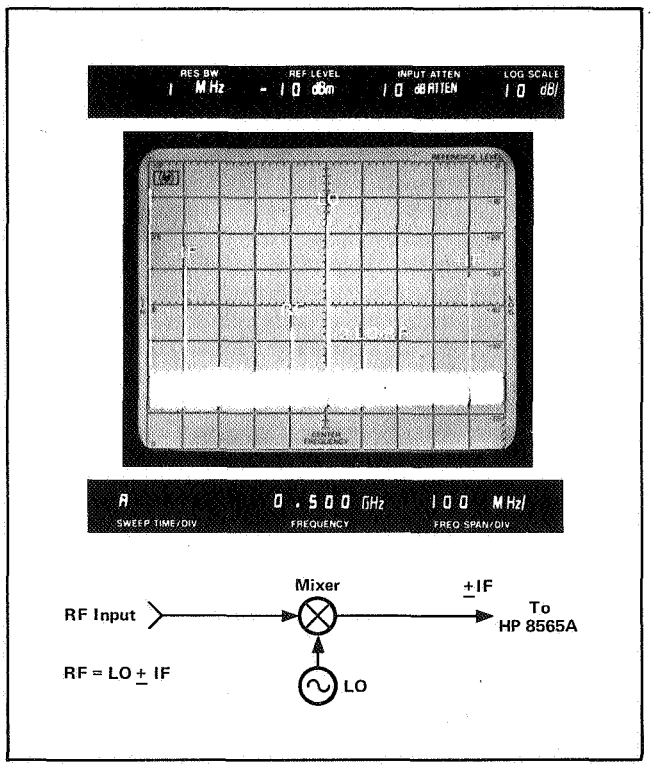

Figure 24. Mixer measurement

Oscillators

Distortion in oscillators may be harmonically or non-harmonically related to the fundamental frequency. Non-harmonic oscillator outputs are usually termed spurious. Both harmonic and spurious outputs of an oscillator can be minimized with proper biasing and filtering techniques. The HP 8565A can monitor changes in distortion levels while modifications to the oscillator are made. In the full-band modes, a tuning marker can be located under any signal response to determine its frequency and hence its relationship to the oscillator's fundamental frequency. Figure 25 is a CRT photo of the fundamental and second harmonic of an S-Band (2 to 4 GHz) YIG oscillator. The internal preselector of the HP 8565A enables the analyzer to measure a low-level harmonic in the presence of a high-level fundamental. The photo was obtained by adjusting the PERSIST control to allow storage of the trace and then tuning the oscillator over a narrow band.

Note: Consult AN 150-11 for more information on distortion measurements.

MODULATION

AM

The wide dynamic range of the spectrum analyzer allows accurate measurement of modulation levels. A 0.06% modulation is a logarithmic ratio of 70 dB, which is easily measured with the HP 8565A. Figure 26 is a signal with 2% AM; a log ratio of 40 dB.

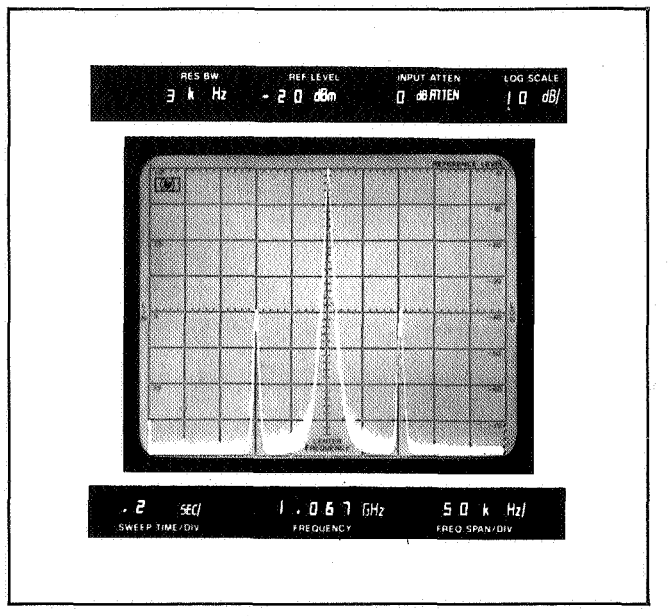

Figure 26. 2% AM

When the analyzer is used as a manually-tuned receiver (ZERO SPAN), the AM is demodulated and viewed in the time domain. To demodulate an AM signal, uncouple

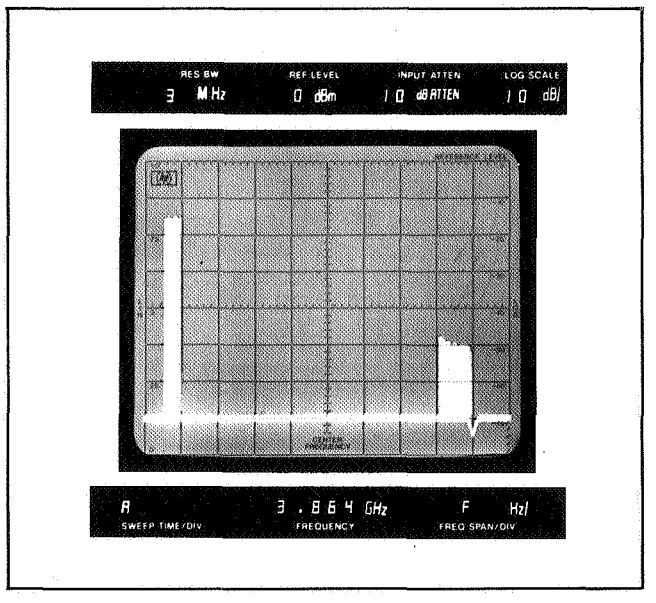

Figure 25. Oscillator fundamental and second harmonic

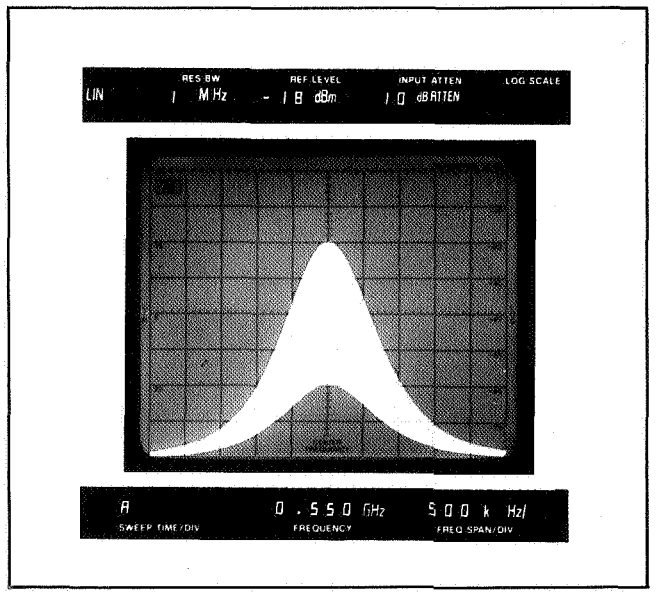

Figure 27. Linear amplitude display

the RESOLUTION BW and set it to a value at least twice the modulation frequency. Then set the AMPLITUDE SCALE to LIN and center the signal, horizontally and vertically, on the CRT. (See Figure 27)) By pushing ZERO SPAN and VIDEO triggering, the modulation will be displayed in the time domain. (See Figure 28.) The time variation of the modulation signal can then be measured with the calibrated SWEEP TIME/DIV control.

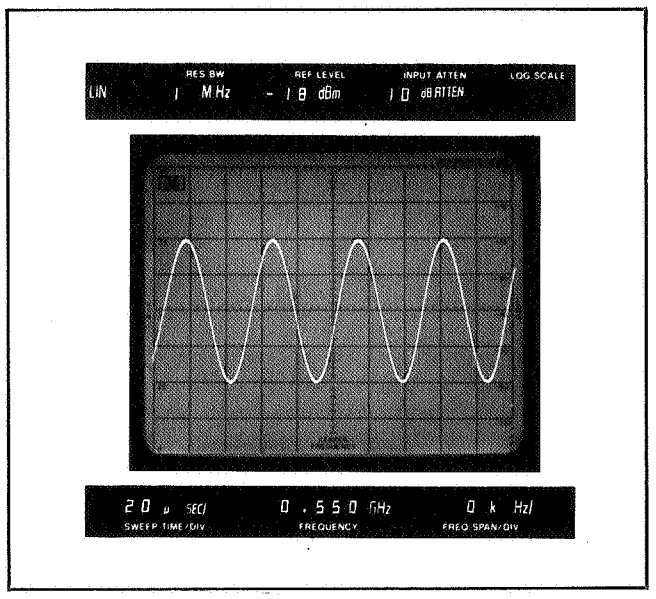

Figure 28. Demodulated AM signal in ZERO SPAN

FM

For frequency modulated signals, parameters such as modulation frequency (f_m), modulation index (m), peak frequency deviation of carrier (Δf peak) are all easily measured with the HP 8565A. The FM signal in Figure 29 was adjusted for the carrier null which corresponds to m = 2.4 on the *Bessel* function. The modulation frequency, f_m, is simply the frequency separation of the sidebands which is 50 kHz. From this, we can calculate the peak frequency deviation of the carrier (Δf peak) with the following equation:

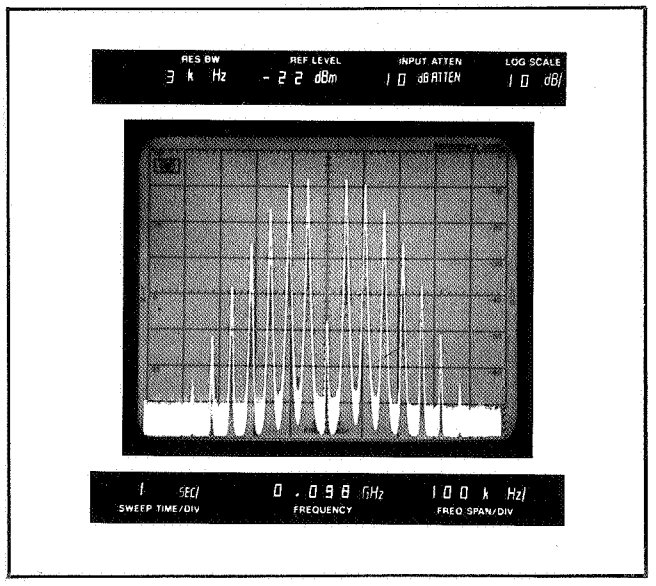

Figure 29. FM signal

$$m = \frac{\Delta f \text{ peak}}{f_m} \quad \text{or} \quad \Delta f \text{ peak} = 2.4 \times 50 \text{ kHz} = 120 \text{ kHz}.$$

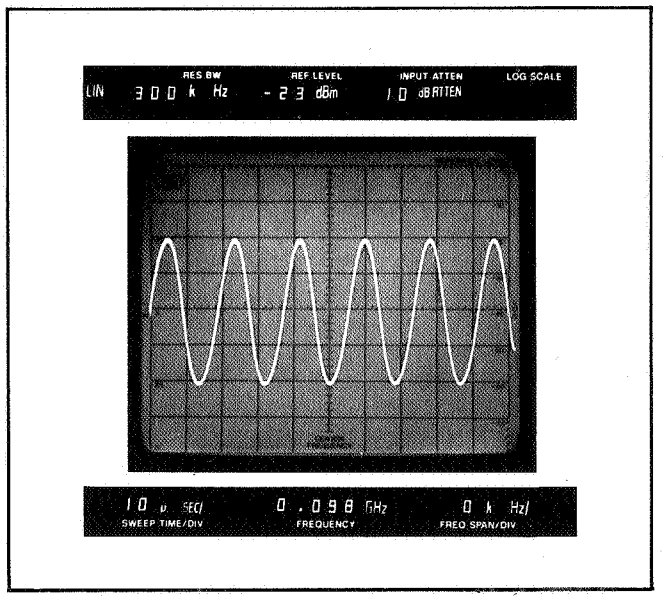

Figure 30. Demodulated FM signal in ZERO SPAN

Although the HP 8565A does not have a built-in discriminator, FM signals can be demodulated by slope detection. Rather than tuning the signal to the center of the CRT as in AM, the slope of the IF filter is tuned to the center of the CRT instead. At the slope of the IF filter, the frequency variation is converted to amplitude variation. When ZERO SPAN is selected, the amplitude variation is detected by the analyzer and displayed in the time domain as shown in Figure 30. In FM, the RESOLUTION BW must be increased to yield a display similar to Figure 31 before switching to ZERO SPAN.

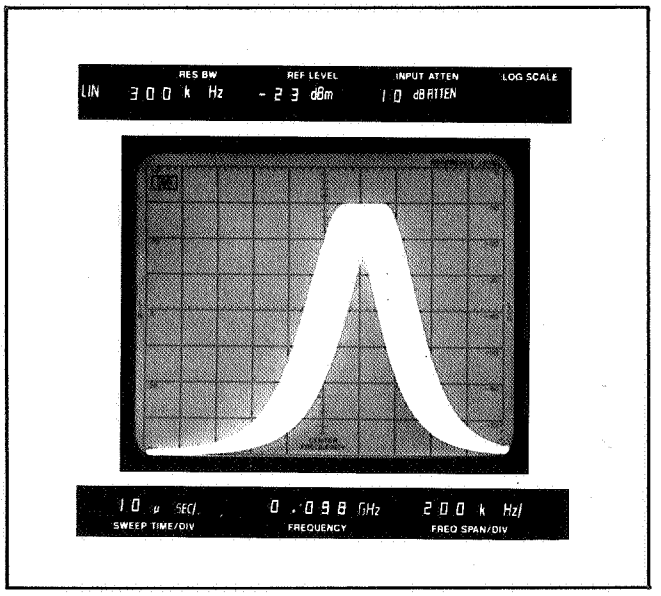

Figure 31. Slope detection of FM signal

Note: Consult AN 150-1 for more information on AM-FM.

Pulsed RF

A pulsed RF signal is a train of RF pulses having constant amplitude. Some parameters to be determined in measuring pulsed RF signals are PRF (pulse repetition frequency), pulse width, duty cycle, peak and average pulse power, and the on-off ratio of the modulator. Figure 32 illustrates a *line* spectrum presentation of a pulsed RF signal.

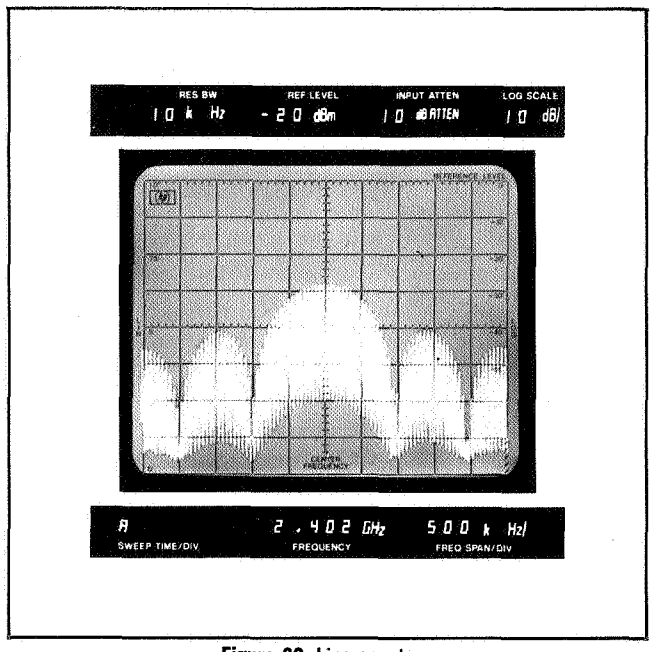

Figure 32. Line spectrum

A *line* spectrum (as opposed to a *pulsed* spectrum) is an actual Fourier representation of a pulsed RF signal; all the spectral components of the signal are fully resolved. To obtain a *line* spectrum on the analyzer, the "rule of thumb" to follow is that the RESOLUTION BW be less than 0.3 x PRF. This insures that individual spectral lines will be resolved. From the line spectrum shown in Figure 32, it is possible to measure the following parameters:

PRF = 50 kHz (spacing between spectral lines)

lobe width = 1 MHz

mainlobe power = −48 dBm

Then from the above measurement the following data can be calculated:

$$\text{Pulse width} = \frac{1}{\text{lobe width}} = \frac{1}{1\ \text{MHz}} = 1\mu\text{s}$$

$$\text{Duty Cycle} = \frac{\text{PRF}}{\text{lobe width}} = \frac{50\ \text{kHz}}{1\ \text{MHz}} = 0.05$$

A factor to consider when measuring the amplitude of a pulsed RF signal is the pulse desensitization factor. The mainlobe power of a pulsed RF signal does not represent the actual peak power of the signal. This is because a pulsed signal has its power distributed over a number of spectral components and each component represents a fraction of the peak pulse power. The HP 8565A measures the absolute power of each spectral component. To determine the peak pulse power in a line spectrum, a pulse desensitization factor (α_L) must be added to the measured mainlobe power. The desensitization factor is a function of the duty cycle and is represented by the following equation:

$$\alpha_L = 20 \log (\text{duty cycle})$$

For a duty cycle of 0.05, $\alpha_L = -26$ dB. Hence the peak pulse power in Figure 33 is −22 dBm (−48 dBm +26 dB).

An alternate method of measuring a pulsed RF signal is in the *pulse* spectrum mode. In a *pulse* spectrum, the individual spectral lines are not resolved. If the RESOLUTION BW of the analyzer is greater than 1.7 x PRF, then the pulsed RF signal is being viewed in the *pulse* spectrum. Using the pulse spectrum enables a wider resolution bandwidth to be used. Two benefits result from this: first, the signal-noise ratio is increased because the pulse amplitude increases linearly with the resolution bandwidth (BW) whereas random noise increases only proportionally to the $\sqrt{\text{BW}}$. Hence the signal-noise ratio of the analyzer is effectively increased. Secondly, faster sweep times can be used because of the wider resolution bandwidths. The HP 8565A has a 3 MHz RESOLUTION BW which enables it to effectively display pulsed RF signals in the pulse spectrum. The 3 MHz bandwidth, along with fast sweep times, also enables narrow pulse widths to be measured in the time domain. Figure 33 illustrates a signal in the pulse spectrum. The same signal is demodulated with the analyzer in Figure 34.

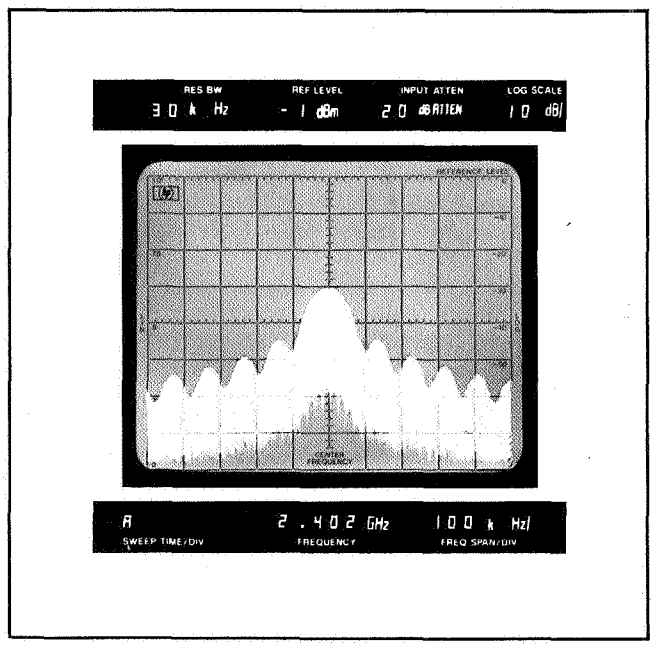

Figure 33. Pulse spectrum

An additional factor to consider when measuring pulsed RF signals is the VIDEO FILTER control. In general, the VIDEO FILTER should be left in the OFF position when measuring pulsed RF signals. Adding video filtering will desensitize a pulsed signal and limit its displayed amplitude. Hence, when monitoring pulsed signals in a full-band mode, it is important to use the F mode rather than

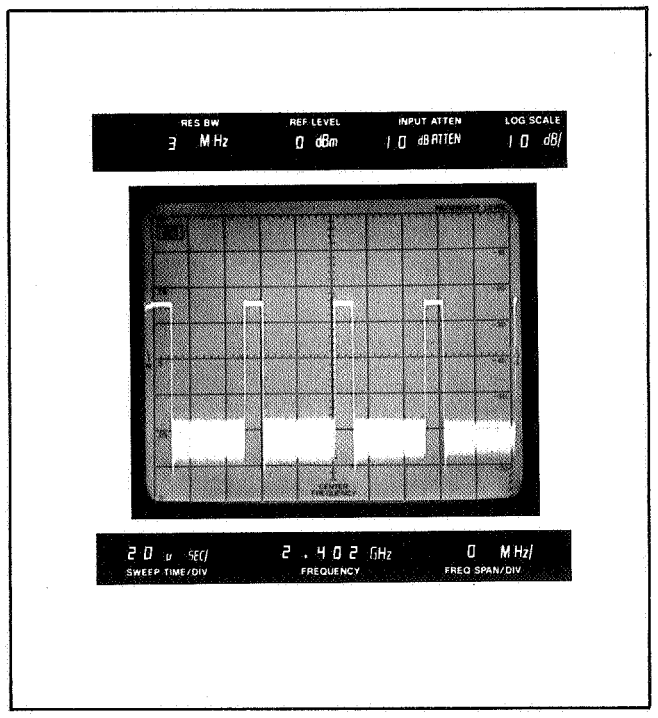

Figure 34. Demodulated pulsed RF signal in ZERO SPAN

the FULL BAND pushbutton mode. The FULL BAND mode automatically engages a 9 kHz VIDEO FILTER (0.003 x 3 MHz) which will limit the displayed amplitude of the pulse.

Note: Consult AN 150-2 for more information on pulsed RF.

NOISE

Applications involving noise measurements include oscillator noise (spectral purity), signal-noise ratio, and noise figure. The NOISE AVG position of the VIDEO FILTER control can be used to measure the analyzer sensitivity or noise power from 0.01 to 22 GHz.

The test set-up in Figure 35 is used to make a swept noise figure measurement of an amplifier. In general, this measurement involves determining the total gain of the amplifier under test and the pre-amp. Then the input of the amplifier is terminated and its noise power is measured. The noise figure of the amplifier will then be the theoretical noise power (KTB) minus the total gain and the amplifier noise power. Figure 36 is a photo of an amplifier's noise power output from 0.01 to 1.3 GHz.

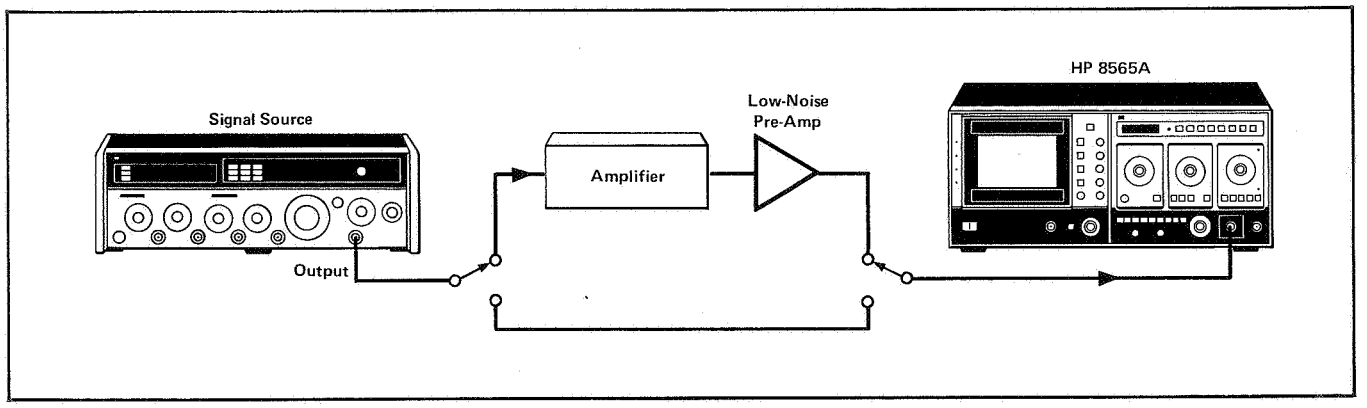

Figure 35. Swept noise figure test set-up

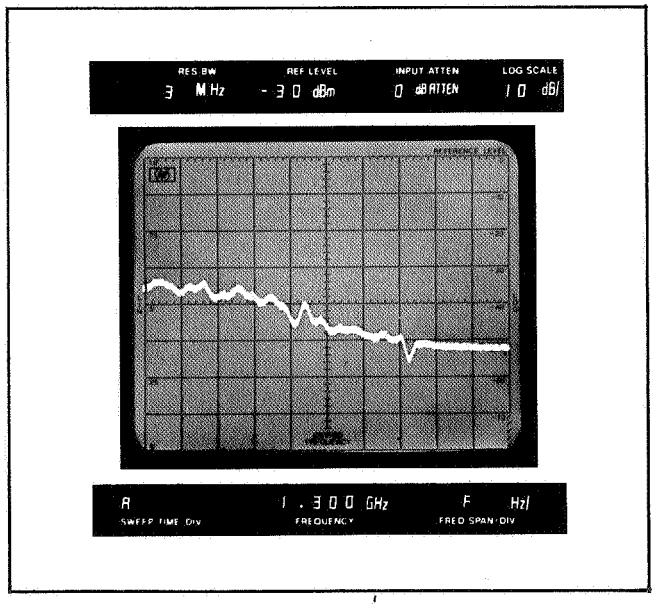

Figure 36. Noise power measurement

Note: Consult AN 150-4, AN 150-7 and AN 150-9 for more information on noise measurements.

ELECTROMAGNETIC INTERFERENCE (EMI)

The overall objective of EMI measurements is to assure compatibility between devices operating in the same vicinity. The HP 8565A, along with an appropriate transducer, is capable of measuring either conducted or radiated EMI. Figure 37 illustrates a simple set-up used for measuring radiated field strength.

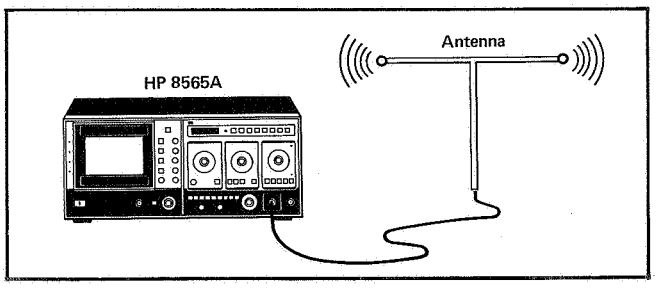

Figure 37. Field strength test set-up

The antenna is used to convert the radiated field to a voltage for the analyzer to measure. The field strength will be the analyzer reading plus the antenna correction factor. Figure 38 illustrates a typical signal generated by a DUT (Device Under Test) with spurious radiation.

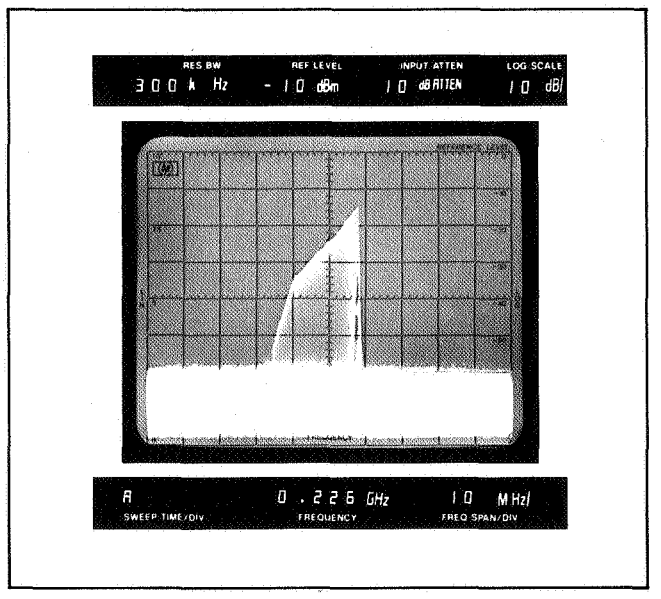

Figure 38. Spurious radiation

Compatibility is also important for high-frequency circuits which are in close proximity to each other. In a multi-stage circuit, parasitic oscillation from one stage can couple to a nearby stage and cause unpredictable behavior. A popular technique used to search for spurious radiation is with an inductive loop probe. The loop probe is simply a few turns of wire that attaches to the spectrum analyzer with a flexible coaxial cable. (See Figure 39.)

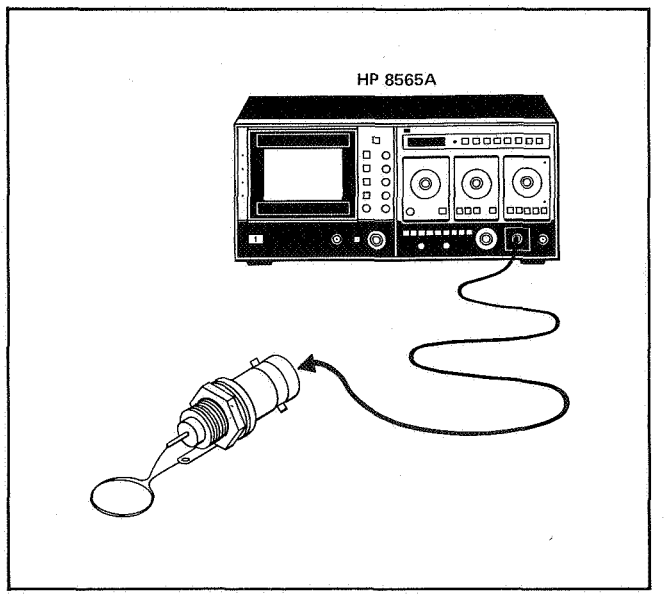

Figure 39. Loop probe

Various parts of the circuit can then be "probed" to identify the location as well as the frequency and relative amplitude of a spurious signal. Once the spurious signal has been identified, design techniques can be implemented to reduce or eliminate the cause of interference.

Note: Consult AN 150-10 and AN 63E for more information on EMI measurements.

Appendix A
OPERATING PRECAUTIONS

The spectrum analyzer is a sensitive measuring instrument. To avoid damage to the instrument, do not exceed the following **Absolute Maximum Inputs:**

Total Power: +30 dBm (1 watt)
DC: 0 V with 0 dB INPUT ATTEN
±7 V with ≥10 dB INPUT ATTEN
AC: (≤50 Ω nominal source impedance):
0 V with 0 dB INPUT ATTEN
10 V peak with ≥10 dB INPUT ATTEN

Overloading the input with too much power, peak voltages or dc voltages will damage the input circuit and require expensive repairs.

LOW IMPEDANCE AC

A source with less than 50 Ω nominal output impedance can produce excessive current which may damage the input circuit of the analyzer.

DC PRECAUTIONS

The HP 8565A *cannot* accept DC voltages in *0 dB* INPUT ATTEN. With 10 dB or greater INPUT ATTEN, small DC voltages (≤ ±7 V) can be accepted without damage if the total power (AC and DC) does not exceed 1 watt.

The input is direct-coupled and its DC input resistance varies from 0 to 87 Ω depending on the INPUT ATTEN and FREQUENCY BAND selected. (Refer to Figure 40.)

If large DC components are present with AC signals, a blocking capacitor should be used at the INPUT of the analyzer to eliminate the DC components.

Note: Input signal distortion may occur if DC voltages are applied in excess of those shown in the table below:

INPUT ATTEN	MAXIMUM DC Voltage (without distortion)
0 dB	0 V
10 dB	220 mV
20 dB	700 mV
30 dB	2.2 V
≥40 dB	7 V

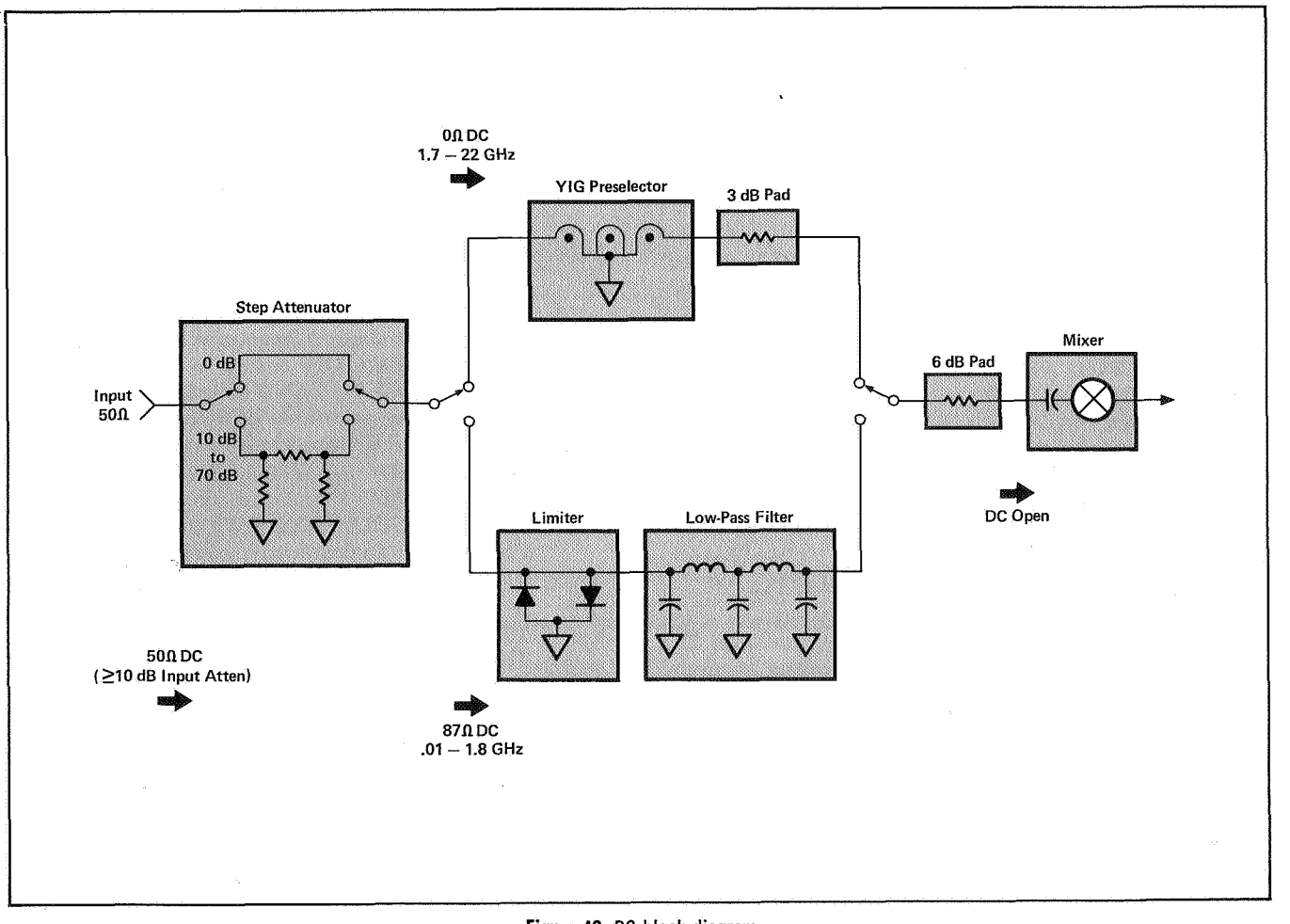

Figure 40. DC block diagram

Appendix B
CONTROL GLOSSARY

FRONT PANEL

1. **LINE:** AC line switch. Turns instrument ON-OFF.
2. **ASTIG:** Used with FOCUS to obtain smallest spot size on CRT.
3. **TRACE ALIGN:** Rotates trace about center of CRT.
4. **HORIZ POSN:** Adjusts horizontal position of CRT trace.
5. **VERT POSN:** Adjusts vertical position of CRT trace.
6. **ERASE:** Removes trace from CRT. Operates in WRITE mode only.
7. **WRITE:** Allows CRT to write with variable persistence. Used for most applications.
8. **PERSIST:** Adjusts fade rate of trace in WRITE mode. Used to eliminate trace flickering.
9. **CONV:** Conventional (non-storage, short persistence) CRT display. Useful for observing fast sweeps in ZERO SPAN.
10. **INTENSITY:** Adjusts brightness of CRT trace.
11. **STORE:** Retains CRT trace at reduced intensity for photography or extended viewing. CRT does not write or erase in STORE mode. FREQUENCY readout is frozen.
12. **STORE INTEN:** Adjusts stored trace intensity for photography or viewing. Minimum intensity yields longest storage time.
13. **SCALE:** Sequentially erases trace, blanks CRT, and turns on scale illumination for photography. FREQUENCY readout is frozen.
14. **SCALE INTEN:** Adjusts scale illumination for photography.
15. **FOCUS:** Adjusts sharpness of CRT trace.
16. **BASELINE CLIPPER:** Adjusts the vertical level below which the CRT is blanked. Helps prevent blooming by blanking the bright baseline of area of CRT. Especially useful for pulsed RF and transient signals.
17. **CAL OUTPUT:** An internal 100 MHz, −10 dBm calibration signal.
18. **SIG IDENT:** Used to verify frequency of unknown signals. With FREQUENCY SPAN/DIV at 1 MHz, correct response will shift two divisions to the left and be lower in amplitude. Especially useful in EXT MIXER bands or when small signals present with large signals (ratio ≥70 dB). Note: SIG IDENT does not properly identify internal 100 MHz CAL OUTPUT signal.
19. **VIDEO FILTER:** Selects post-detection, low-pass filters which smooth the trace by averaging random noise. The VIDEO FILTER bandwidth is equal to the RESOLUTION BW times the factor indicated on the control knob. The NOISE AVG position is a fixed 1 Hz low-pass filter used for noise measurements only.
20. **FREQ CAL:** Calibrates the FREQUENCY readout to a known frequency reference.
21. **FREQUENCY:** Displays the tuned center frequency of analyzer in PER DIV and ZERO SPAN. In full-band modes, display reads frequency at the tuning marker.
22. **FREQUENCY BAND:** Selects frequency range.
23. **TUNING:** Tunes center frequency of analyzer or positions marker in full-band modes. Coarse tuning provided by large knob; push for *normal* and pull for *rapid*. Smaller knob provides FINE tuning.
24. **PRESELECTOR PEAK:** Adjusts tracking of internal YIG preselector. Normally centered in green area for best broadband performance from 1.7 to 22 GHz. Used to maximize signals for more accurate amplitude measurements.
25. **AUTO STABILIZER:** Analyzer is automatically stabilized for narrow frequency spans (≤100 kHz/DIV). In stabilized mode, light is on and only FINE tuning should be used. Pushbutton switch (when depressed) disables AUTO STABILIZER to allow coarse tuning in narrow spans.
26. **FREQUENCY SPAN/DIV:** Selects CRT horizontal frequency calibration in PER DIV mode. Each major division on CRT (total of 10) represents frequency span selected.
27. **RESOLUTION BW:** Selects analyzer 3 dB IF bandwidth. Optimum resolution bandwidth for any frequency span automatically selected when markers are aligned (▶ ◀) and controls pushed in to couple. RESOLUTION BW can also be coupled at settings other than OPTIMUM or it can be operated independently (uncoupled).
28. **FREQUENCY SPAN MODE:** Selects desired span mode.
    a. **ZERO SPAN:** Analyzer operates as a manually-tuned receiver to display detector output in time domain. The SWEEP TIME/DIV control is a calibrated time base when switched out of AUTO position.
    b. **PER DIV:** Allows FREQUENCY SPAN/DIV control to select desired frequency span. With FREQUENCY SPAN/DIV control in F (full band), entire FREQUENCY BAND selected is displayed. A tuning marker, selectable RESOLUTION BW, and VIDEO FILTER are available in the F position.
    c. **FULL BAND:** Spans the entire FREQUENCY BAND selected. A tuning marker is available and 3 MHz RESOLUTION BW and 0.003 VIDEO FILTER are automatically selected.
    d. **1.7 - 22 GHz SPAN:** Analyzer spans 1.7 to 22 GHz in one sweep. A tuning marker is available and 3 MHz RESOLUTION BW and 0.003 VIDEO FILTER are automatically selected.
29. **REFERENCE LEVEL:** Controls power level (in dBm) represented by top graticule line of CRT. Adjustable in calibrated 10 dB steps with continuous calibrated 0 to −12 dB FINE vernier.
30. **INPUT ATTEN:** Push and turn to select desired RF input attenuation indicated by blue numbers. Yellow outlined numbers indicate MAXIMUM input level for <1 dB signal compression. A reminder light indicates ZERO dB input attenuation. (≥10 dB INPUT ATTEN provides best input match).

31. **AMPLITUDE SCALE:** Selects log (dB/DIV) or linear vertical scale calibration. REFERENCE LEVEL remains constant at top graticule line.

32. **REF LEVEL CAL:** Calibrates REFERENCE LEVEL to a known amplitude reference.

33. **SWEEP SOURCE:** Selects desired sweep source.
    a. **MAN:** Sweep controlled with MANUAL SWEEP knob.
    b. **EXT:** Allows analyzer to be swept with external source.
    c. **INT:** Analyzer sweeps repetitively with internal source. Synchronization selected by SWEEP TRIGGER.

34. **SWEEP TRIGGER:** Selects desired trigger source for INT sweep.
    a. **FREE RUN:** Sweep triggered repetitively by internal source.
    b. **LINE:** Sweep triggered by ac line frequency.
    c. **VIDEO:** Sweep internally triggered by detected waveform of RF signal. Normally used for time domain analysis in ZERO SPAN.
    d. **EXT:** Sweep triggered by external signal.
    e. **SINGLE:** Sweep triggered by START/RESET pushbutton.
    f. **START/RESET:** Dual function pushbutton; can start a single sweep or reset *any* internal sweep back to left edge of CRT.
    g. **TRIGGER LEVEL:** Adjusts trigger level in VIDEO or EXT trigger mode. DC coupled, positive slope triggering. In VIDEO, + or − indicates trigger level relative to center horizontal graticule line.
    h. **SWEEP:** Light is on while analyzer is sweeping.

35. **SWEEP TIME/DIV:** Selects time required to sweep one major horizontal division on CRT. AUTO position automatically selects proper sweep time as a function of FREQUENCY SPAN/DIV, RESOLUTION BW, and VIDEO FILTER settings to maintain a calibrated amplitude display. AUTO feature is retained when FREQUENCY SPAN/DIV and RESOLUTION BW are uncoupled. Control is calibrated time base when switched out of AUTO. Sweep times ≤1 msec/DIV are used for time domain analysis (ZERO SPAN) only.

36. **INPUT 50Ω:** Type N female connector with 50Ω input impedance. Used for signals from 0.01 to 22 GHz. CAUTION: Maximum input is +30 dBm (1 watt) and 0 volts DC. (See Operating Precautions.)

37. **EXT MIXER:** Input/output port for use with HP 11517A External Mixer. Used for measurements from 14.5 to 40 GHz in waveguide. The BNC connector supplies LO signal and DC bias to external mixer and receives IF signal from mixer. Terminate in 50Ω load when not in use. CAUTION: Maximum input level to HP 11517A is 0 dBm (1 mW).

38. **EXT MIXER BIAS:** Controls amount of dc bias to HP 11517A mixer diode. Adjust to maximize signal amplitude.

39. **INFORMATION CARD:** Pull out to use. Card provides basic HP 8565A operating instructions and reference information.

40. **CRT BEZEL READOUT:** Displays all major spectrum analyzer settings.

REAR PANEL

41. **HORIZONTAL SWEEP OUTPUT** (X-axis): A −5 V to +5 V output which is proportional to horizontal CRT deflection from left to right, respectively. 0.0 V corresponds to center of CRT. Output impedance is 5 kΩ. Used for driving horizontal channel of X-Y recorder or other external monitors.

42. **VERTICAL OUTPUT** (Y-axis): A 0 to +0.8 V detected video output which is proportional to vertical deflection on CRT. 0 V corresponds to bottom graticule line and +0.8 V corresponds to top graticule line. Output impedance is 50Ω. Used for driving vertical channel of X-Y recorder or other external monitors. Also useful in ZERO SPAN for listening to detected output with headphones.

43. **BLANK OUTPUT (PENLIFT)** (Z-axis): A 0 or +15 V output which corresponds to CRT blanking during retrace and oversweeping of band edges. During unblank period (pen down) output is 0 V with 10Ω output impedance. Caution: Maximum current sink 150 ma. During blank (pen up) output is +15 V with 10 kΩ output impedance. Used to control pen lift of X-Y recorder or blanking of other external monitor.

44. **EXT SWEEP INPUT:** With SWEEP SOURCE in EXT, a 0 to +10 V ramp will sweep analyzer across frequency span selected. Caution: Maximum input level is ±40 V. Input impedance is 100 kΩ.

45. **EXT TRIGGER INPUT:** With SWEEP TRIGGER in EXT, a positive voltage >1 V will trigger internal sweep source. TRIGGER LEVEL adjusts point (from 1 to 10 V) on trigger waveform which starts sweep. DC coupled, positive-slope triggering. Caution: Maximum input is ±40 V. Input impedance is 100 kΩ.

46. **BLANKING INPUT:** Permits external blanking control of CRT. TTL compatible; high (>2 V) blanks CRT, low (<0.5 V) or an open circuit retains normal CRT operation. Caution: Maximum input is ±40 V. Input impedance is 10 kΩ.

47. **1ST LO OUTPUT:** A 2.0 to 4.46 GHz, +8 dBm nominal output coupled from first local oscillator. Terminate with 50Ω load when not in use. (See Appendix D for information on LO for each FREQUENCY BAND.)

48. **21.4 MHz IF OUTPUT:** A 21.4 MHz output linearly related to the RF input to analyzer. Bandwidth controlled by analyzer RESOLUTION BW setting. Amplitude controlled by INPUT ATTEN, REF LEVEL FINE and first six REFERENCE LEVEL step gain positions (0 to −50 dBm with 0 dB INPUT ATTEN). Output is approximately −10 dBm for full-scale signals on CRT. Output impedance is 50Ω.

49. **AUX A:** Interconnection jack for interfacing HP 8750 Storage-Normalizer to analyzer.

50. **AUX B:** Interconnection jack for factory calibration of analyzer.

51. **POWER LINE MODULE:** Line voltage selector card allows choice of 100, 120, 220, or 240 volts (+5%, −10%). Line fuse contained in power line module. Warning: A 2 amp normal blow fuse must be used for 100 or 120 V operation and a 1 amp normal blow fuse must be used for 220 or 240 V operation.

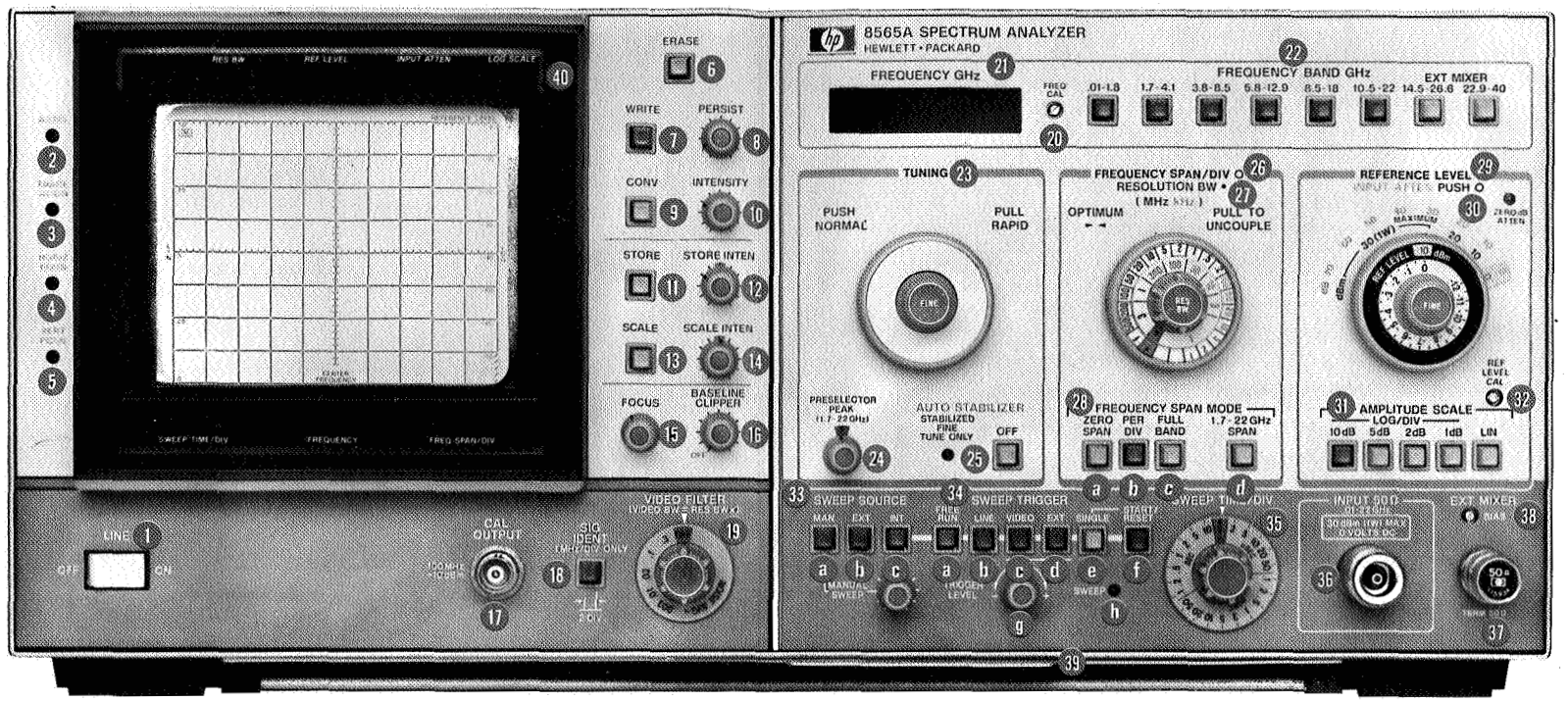

Figure 41. Front panel diagram

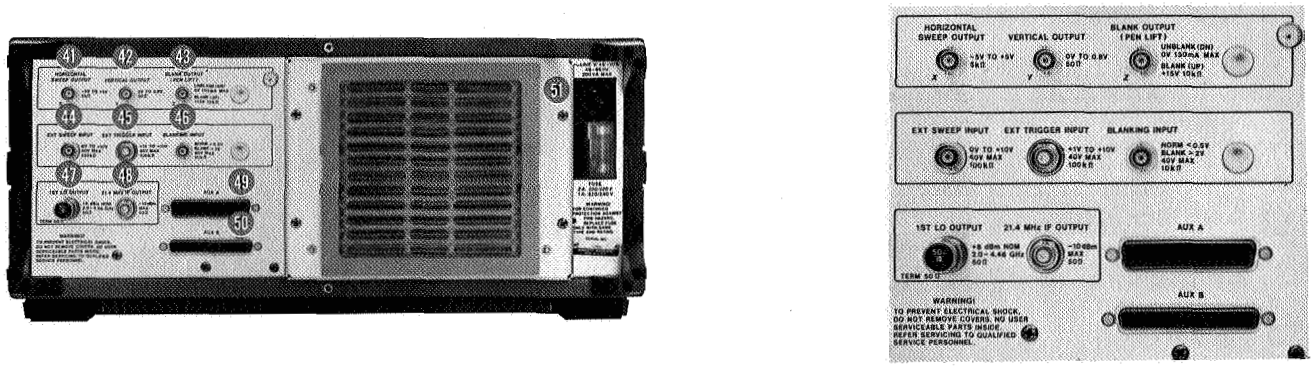

Figure 42. Rear panel diagram

Appendix C
FRONT PANEL ADJUSTMENT PROCEDURE

The Front Panel Adjustment optimizes the performance of the HP 8565A Spectrum Analyzer to obtain its specified accuracy. The following step-by-step procedure is recommended for adjusting the HP 8565A. A condensed procedure is also located on a pull-out INFORMATION CARD attached to the analyzer.

Table 4. Normal settings

Function	Setting
CRT DISPLAY	WRITE
BASELINE CLIPPER	OFF
FREQUENCY SPAN/DIV RESOLUTION BW	OPTIMUM ▶ ◀ (Push in to couple)
FREQUENCY SPAN MODE	PER DIV
AMPLITUDE SCALE	10 dB/DIV
VIDEO FILTER	OFF
SWEEP SOURCE	INT
SWEEP TRIGGER	FREE RUN
SWEEP TIME/DIV	AUTO
PRESELECTOR PEAK	Center in green area

PRE-ADJUSTMENT SETTINGS

1. Set Normal Settings on analyzer (Table 1).
2. Set FREQUENCY BAND to 0.01 - 1.8 GHz ☐ .
3. Set FREQUENCY SPAN/DIV to 0.2 MHz (200 kHz).
4. Set INPUT ATTEN to 10 dB.
5. Set REFERENCE LEVEL to −10 dBm and REF LEVEL FINE to 0 dB.
6. Set AMPLITUDE SCALE to LIN ☐ .

DISPLAY ADJUSTMENTS

1. Adjust VERT POSN ⊘ to place the CRT trace on a horizontal graticule line near center of CRT.
2. Reduce INTENSITY and depress both INT ▣ and EXT ☐ SWEEP SOURCE to produce a dot on the CRT. Caution: Leaving a dot on the CRT for prolonged periods at high intensity may burn the phosphor.
3. Adjust ASTIG ⊘ and FOCUS for the smallest round dot.
4. Adjust HORIZ POSN ⊘ to center dot on the CRT. Reset to INT ▣ SWEEP SOURCE.
5. Adjust TRACE ALIGN ⊘ so that the trace is parallel to a horizontal graticule line.
6. Adjust VERT POSN ⊘ to re-position baseline on the bottom graticule line.

FREQUENCY ADJUSTMENT

Connect 100 MHz CAL OUTPUT signal to INPUT and center signal on CRT with TUNING control. Adjust FREQ CAL ⊘ to indicate 0.100 GHz on FREQUENCY readout.

AMPLITUDE ADJUSTMENT

Set AMPLITUDE SCALE to 1 dB/DIV ☐ .

Adjust REF LEVEL CAL ⊘ to position the peak of the signal on the REFERENCE LEVEL (top graticule line) of the CRT.

Once the Front Panel Adjustment Procedure is completed, the CRT display should look similar to Figure 43.

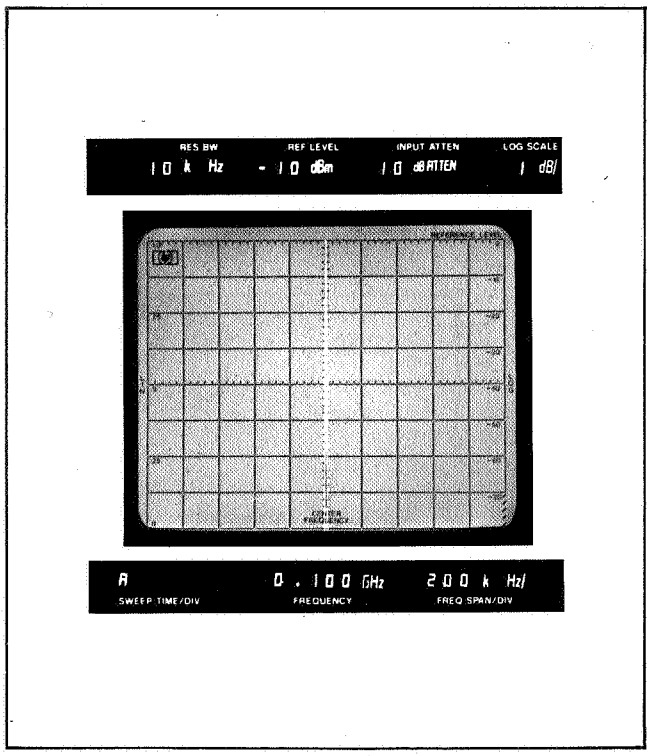

Figure 43. CAL OUTPUT signal

Reset the AMPLITUDE SCALE to 10 dB/DIV ▣ . The HP 8565A is now calibrated for absolute frequency and amplitude measurement.

Appendix D
THEORY OF OPERATION

SYSTEMS DESCRIPTION

The HP 8565A Spectrum Analyzer is basically an electronically-swept superheterodyne receiver. It has high sensitivity and selectivity, a wide distortion-free dynamic range, and excellent flatness from 10 MHz to 22 GHz. With external mixing, frequency coverage can be extended up to 40 GHz. The HP 8565A consists of an RF and IF section, an automatic stabilization and control section, and a display section. Each of these sections will be discussed separately in this appendix. A simplified block diagram (Figure 44) is shown below for reference.

RF SECTION

The RF section is composed of a 0-70 dB step attenuator, an automatic preselector, a tunable local oscillator (LO), and a broadband mixer. The step attenuator at the input to the spectrum analyzer is used to control the signal level to the mixer for optimum dynamic range and signal-noise ratio. The automatic preselector consists of a low-pass filter from 0.01 to 1.8 GHz and a YIG-tuned filter (YTF) from a 1.7 to 22 GHz. Coaxial switches are used to switch to the proper filter depending on frequency band chosen. The automatic preselector eliminates most image, multiple, and spurious responses of the analyzer and thus enhances its dynamic range. A transistorized YIG-tuned oscillator (YTO) with a fundamental tuning range of 2.05 to 4.46 GHz is used as the LO in this superheterodyne system.

The basic frequency conversion equation for a heterodyne system is given by equation 1:

(1): $f_s = f_{lo} \pm f_{if}$

where: f_s = signal frequency

f_{lo} = local oscillator frequency

f_{if} = intermediate frequency

The first IF in the HP 8565A is set at 321.4 MHz and the first LO sweeps from 2.0 to 4.46 GHz. Therefore, from equation 1, f_s would cover approximately 1.68 to 4.14 GHz in fundamental operation. With harmonic mixing, given by equation 2:

(2): $f_s = nf_{lo} \pm f_{if}$

where:

n (harmonic number) = 1−, 2−, 3−, 4+, 5+, 6+, 10+

the frequency range is extended to 40 GHz. Each harmonic number creates a tuning curve which is illustrated in Figure 45, page 28. Signal frequencies from 0.01 to 1.8 and 1.7 to 22 GHz are converted to a 2050 MHz and 321.4 MHz IF respectively with the broadband internal mixer. In the 1.7 to 22 GHz frequency range, the YIG-tuned filter tracks a particular tuning curve and thus eliminates spurious responses resulting from harmonic mixing. From 14.5 to 40 GHz, an external waveguide mixer is used to convert the input signals to a 2050 MHz IF which is then further processed by the analyzer.

AUTOMATIC STABILIZATION SECTION

Many factors can limit the resolution of the spectrum analyzer. Among these are the local oscillator's stability and spectral purity, and the IF filter's bandwidth and shape factor. Of these limitations, the most significant one for microwave analyzers is usually the stability (residual FM or drift) of an oscillator. For this reason, the HP

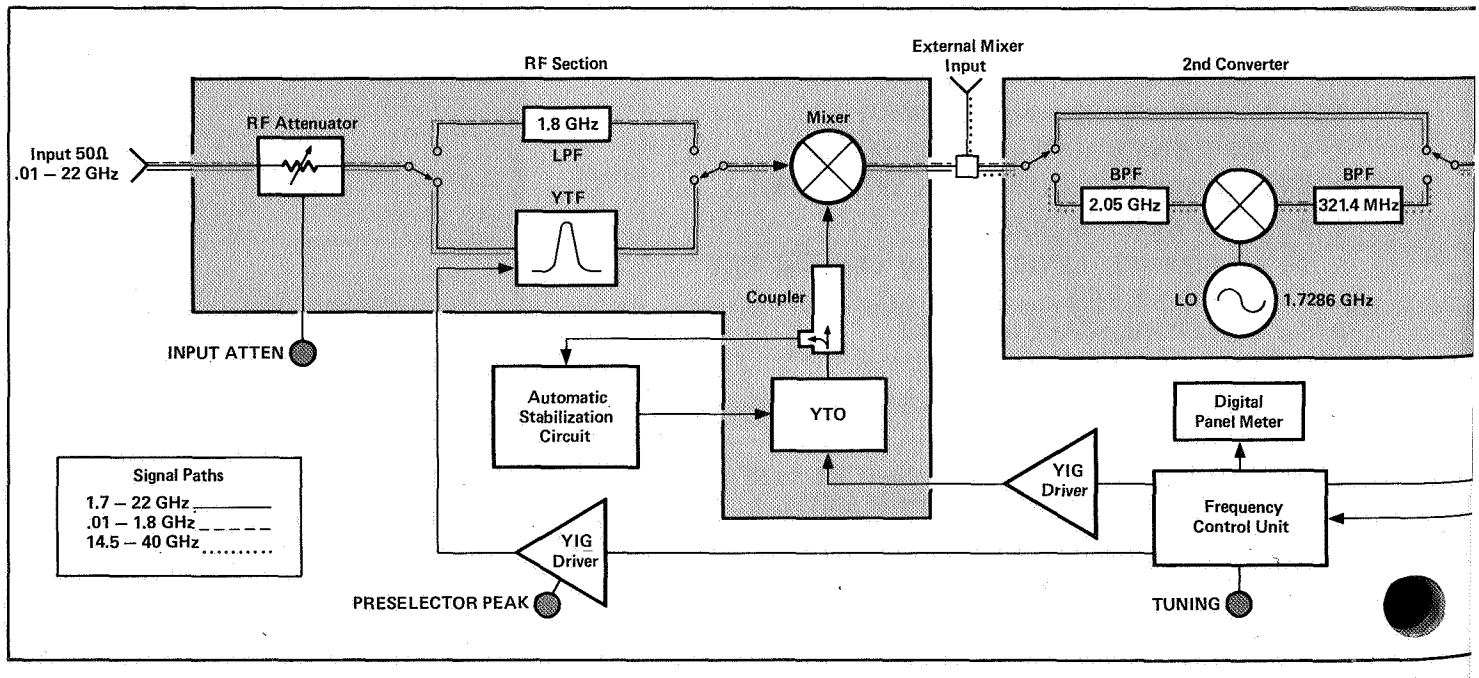

Figure 44. HP 8565A block diagram

8565A utilizes an automatic stabilization circuit that locks the YTO to a 1 MHz crystal reference oscillator. The lock is automatically engaged when frequency spans of 100 kHz/DIV or less are selected. The AUTO STABILIZER can be disabled by a pushbutton switch located on the front panel. An added feature to the automatic stabilization circuit is the use of offset compensation to maintain the signal of interest fixed on the CRT during stabilization. The circuit is designed such that the YTO is not moved when it is locked to the reference oscillator. Since there is no frequency shift in the YTO, the displayed signal will not shift either. This eliminates the need for the user to retune the signal on the CRT once it has been stabilized.

IF SECTION

The IF section consists of components in the signal path after the first mixer. The output from the first mixer is either 321.4 MHz or 2050 MHz. Signals at 321.4 MHz bypass the second converter whereas a 2050 MHz signal would mix with the second LO at 1.7286 GHz to also produce a 321.4 MHz IF. At the third converter, the 321.4 MHz IF is amplified, filtered, and mixed with the third LO at 300 MHz to produce a final IF of 21.4 MHz. The output of the third converter goes to a variable gain amplifier, selectable bandpass filters, variable gain logarithmic, and linear amplifiers, and is then detected. The detected video signal goes through a selectable video filter and a vertical amplifier to be processed for the display. The IF bandpass filter, log and linear amplifiers, and video filter are all controllable from the front panel of the spectrum analyzer.

DISPLAY SECTION

The sweep voltage that is used to tune the YTO is simultaneously applied to the horizontal deflection amplifiers in the CRT. The video output of the IF section is then synchronously applied to the vertical deflection amplifier and a plot of frequency vs. amplitude results on the CRT.

LED's are embedded in the CRT bezel to allow easy readout of control settings and also to extend the usefulness of CRT photography. The CRT bezel readout displays all pertinent information related to the amplitude, frequency, and sweep time of the analyzer.

Because some combinations of resolution bandwidth, frequency span, and video filtering require slow sweep times, a variable persistence CRT is used to provide a flicker-free display of the signal. The CRT also has storage capability which is useful for extended viewing or photography.

TUNING CONTROL SECTION

The tuning control section contains the Frequency Control Board, YIG driver, Digital Panel Meter (DPM), sweep attenuator, and sweep generator.

The sweep generator provides a sweep voltage that is simultaneously applied to the horizontal deflection amplifier and the sweep attenuator. The sweep attenuator, controlled by the FREQUENCY SPAN/DIV control, reduces the sweep voltage to the Frequency Control Board to maintain a calibrated horizontal scale on the CRT. In addition, the tuning control voltage, which sets the center frequency of the analyzer, is also applied to the Frequency Control Board. The tuning control voltage and the sweep attenuator voltage are summed and scaled in the Frequency Control Board. The resultant signal is then applied to the YIG drivers. Both the YTF and the YTO have separate YIG drivers which are basically voltage-to-current converters. A preselector peak adjustment is used to control the offset of the YTF's YIG driver circuit. It is adjusted to eliminate any amplitude uncertainty due to mis-tracking between the YTF and the YTO. A DPM readout displays the frequency represented by the center of the CRT display.

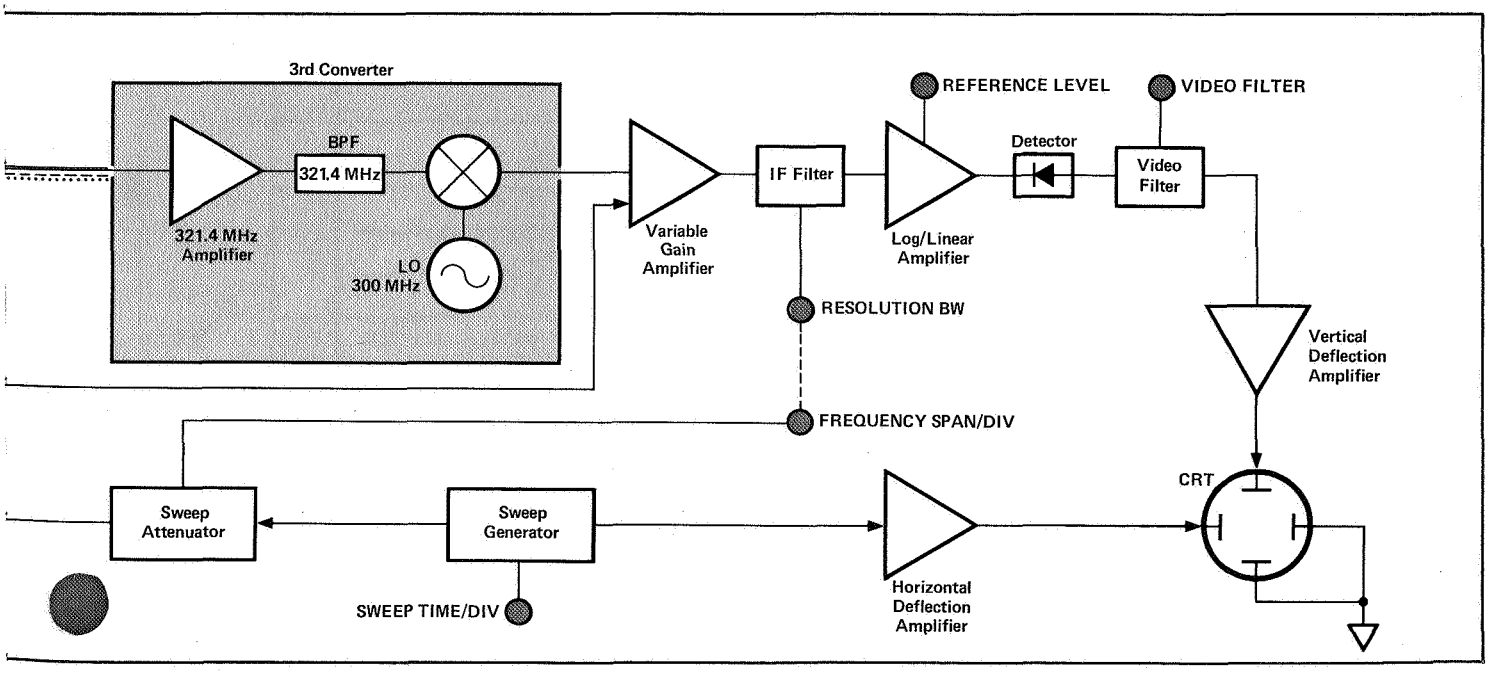

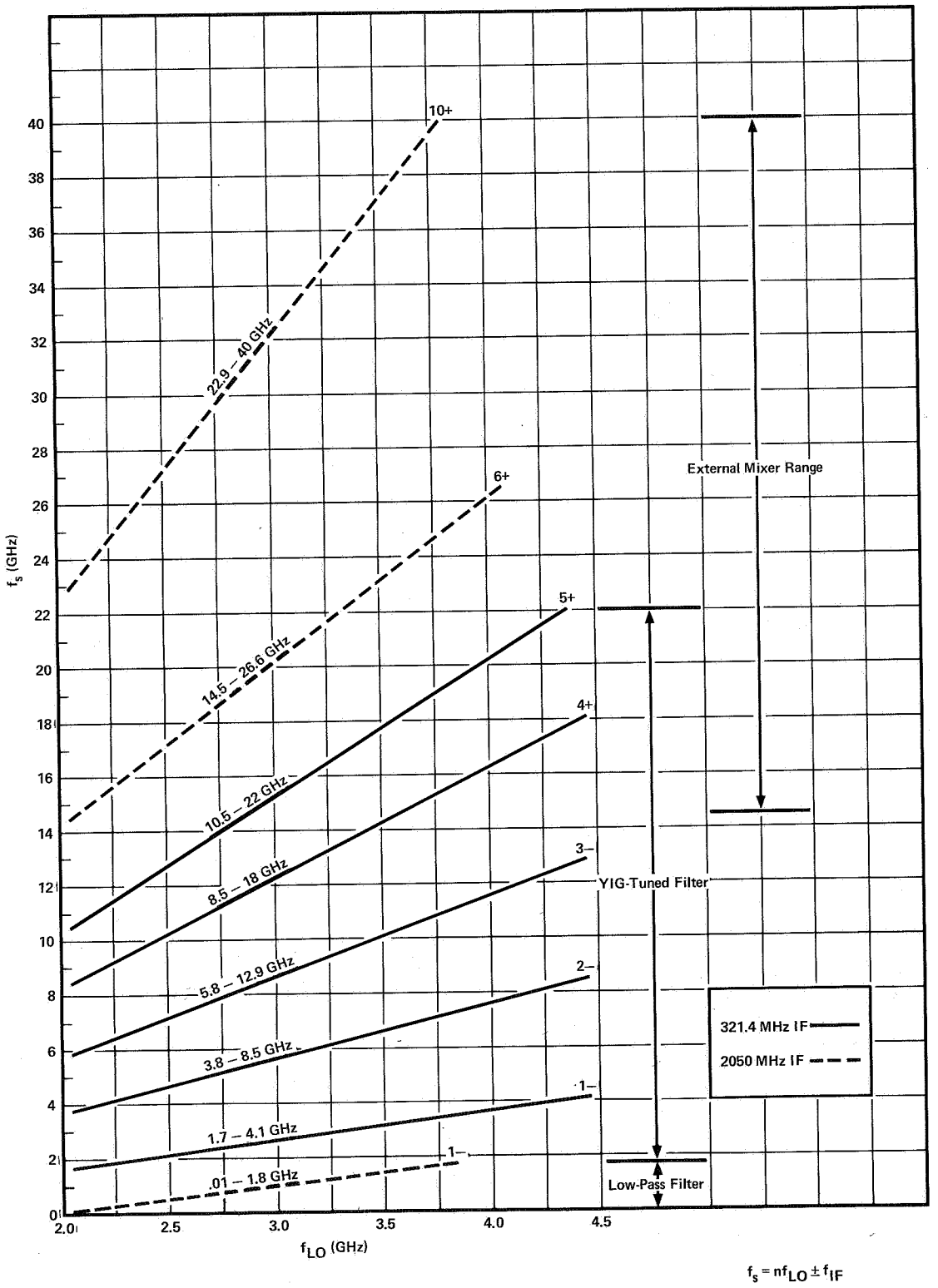

Figure 45. HP 8565A tuning curves

Appendix E
AMPLITUDE CONVERSIONS

The HP 8565A Spectrum Analyzer reads signal levels in dBm. The following equations allow conversion from dBm to dBmV or dBμV in a 50 Ω system.

CONVERSION EQUATIONS

$$\text{dBm} + 107\ \text{dB} = \text{dB}\mu\text{V}$$
$$\text{dBm} + 47\ \text{dB} = \text{dBmV}$$
$$\text{dBmV} + 60\ \text{dB} = \text{dB}\mu\text{V}$$

If it is desired to convert from logarithmic units to linear units, then the equations given below will be useful. Keep in mind that the logarithmic levels are all referenced to linear units.

i.e., 0 dBm referenced to 1 mw
0 dBmV referenced to 1 mV
0 dBμV referenced to 1 μV

Therefore, to calculate a linear level, simply take the antilog of the logarithmic level.

dBm to P(mW)

$$\text{dBm} = 10 \log \frac{P}{1\ \text{mW}},\ P = \log^{-1} \frac{\text{dBm}}{10}$$

dBmV to V(mV)

$$\text{dBmV} = 20 \log \frac{V}{1\ \text{mV}},\ V = \log^{-1} \frac{\text{dBmV}}{20}$$

dBμV to V(μV)

$$\text{dB}\mu\text{V} = 20 \log \frac{V}{1\ \mu\text{V}},\ V = \log^{-1} \frac{\text{dB}\mu\text{V}}{20}$$

Figure 46 below converts from dBm to voltage in a 50 Ω system.

Conversion from dBm to volts can be made whether the AMPLITUDE SCALE is in LOG/DIV or LINear. To read voltage on the HP 8565A, position the signal on the REFERENCE LEVEL line of the CRT. Read the REF LEVEL in dBm and find its equivalent voltage from the Conversion Chart.

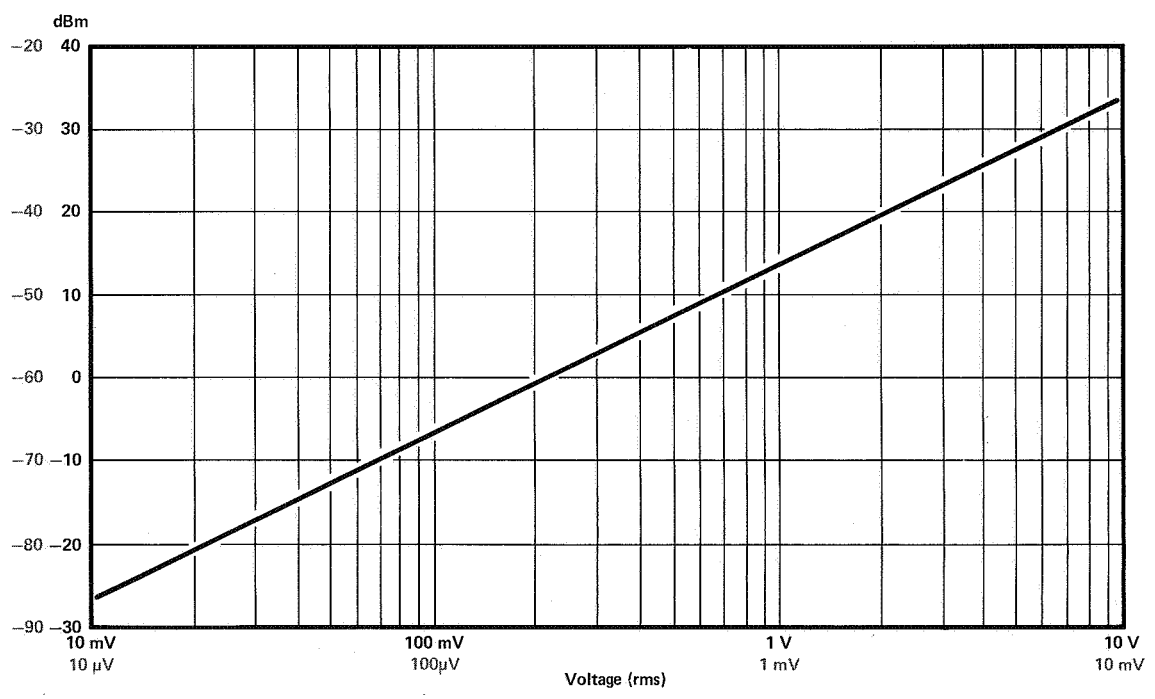

Figure 46. Conversion chart—converts from dBm to voltage in 50 Ω

SECTION IV
PERFORMANCE TESTS

4-1. INTRODUCTION

4-2. The procedures in this section test the electrical performance of the instrument using the specifications of Table 1-1 as the performance standards. All tests can be performed without access to the interior of the instrument. The Incoming Inspection Test of Section II is designed to test the most critical specifications and operating features of the instrument. It is recommended to be used for Incoming Inspections and for verification of overall instrument operation after repair.

4-3. The performance test procedures must be performed in the sequence given, since some procedures rely on satisfactory test results in preceding steps. If a test measurement is marginal, go to Section V and perform adjustment procedures. If a function fails to operate, go to Section VIII and perform troubleshooting.

4-4. EQUIPMENT REQUIRED

4-5. Equipment required for the performance tests is listed in the Recommended Test Equipment, Table 1-3, in Section I. Any equipment that satisfies the critical specifications given in the table may be substituted for the recommended model.

4-6. TEST RECORD

4-7. Results of the performance tests may be tabulated on the Test Record at the end of the procedure. The Test Record lists all of the tested specifications and their acceptable limits. Recorded test results can be used for comparison in periodic maintenance and troubleshooting and after repairs or adjustment.

PERFORMANCE TESTS

NOTE

Allow one hour warm-up time for 8565A Spectrum Analyzer before beginning Performance Tests.

4-8. TUNING ACCURACY TEST

SPECIFICATION

Overall tuning accuracy of the digital Frequency readout in any span mode:

Internal Mixing:

.01 to 2.5 GHz < ± 5 MHz ± 20% of FREQUENCY SPAN/DIV.
2.5 to 22 GHz < ± 0.2% ±20% of FREQUENCY SPAN/DIV.

External Mixing:

14.5 to 40 GHz < ± 0.7% of FREQUENCY SPAN/DIV.

DESCRIPTION:

A comb generator is used to check the tuning accuracy in the low frequency bands (.01 GHz to 4.1 GHz; internal mixing). In the higher frequency bands (3.8 GHz to 22 GHz, internal mixing, and 14.5 GHz to 40 GHz, external mixing) a sweep oscillator is used and the frequencies are accurately tuned using a frequency counter. The signal, in each case, is tuned to the center graticule line of the spectrum analyzer using the TUNING control. The tuning accuracy is then indicated by the FREQUENCY readout.

Scans by ARTEK MEDIA =>

4-8. TUNING ACCURACY TEST (Cont'd)

In the two external mixing bands (14.5 – 40 GHz) the tuning accuracy is checked at 23 GHz. An external mixer is used and the EXTernal MIXER BIAS is adjusted to produce the highest displayed signal level.

CONFIGURATION A

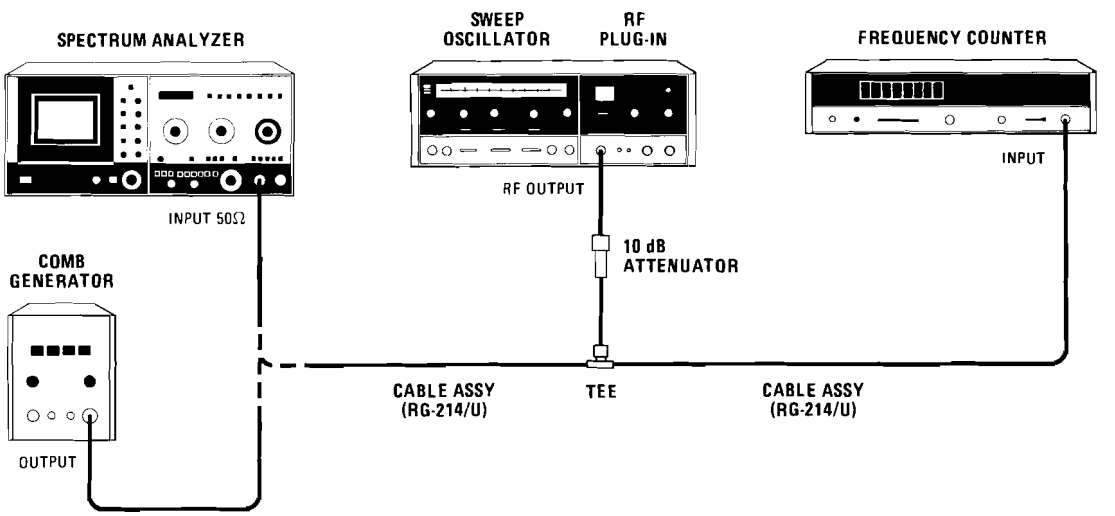

CONFIGURATION B

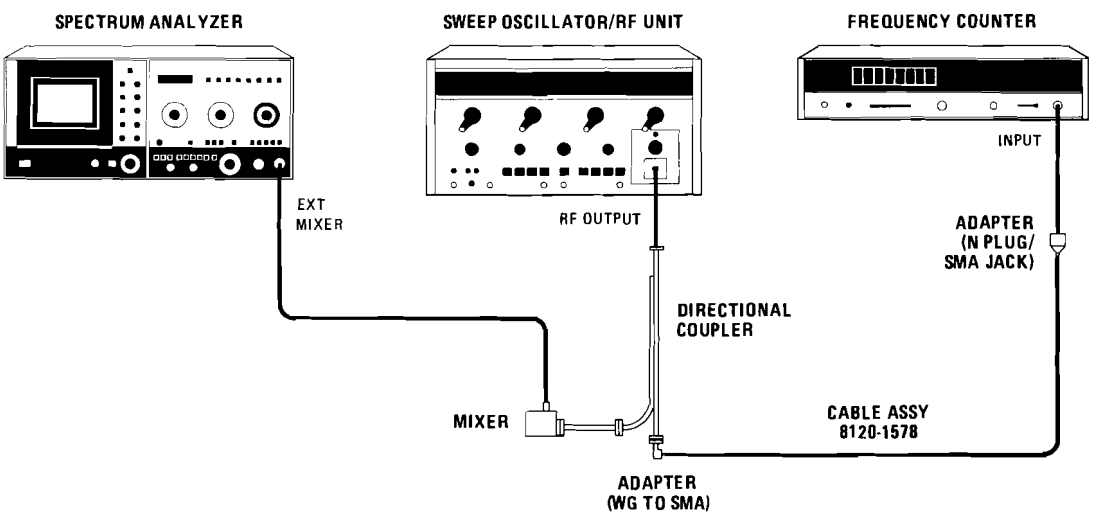

Figure 4-1. Tuning Accuracy Test Setup

Scans by ARTEK MEDIA =>

PERFORMANCE TESTS

4-8. TUNING ACCURACY TEST (Cont'd)

EQUIPMENT:

Sweep Oscillator/RF Plug-in	HP 8620C/86290A
Sweep Oscillator/RF Unit	HP 8690B/8696A
Frequency Counter	HP 5340A Opt. H10
Comb Generator	HP 8406A
Mixer	HP 11517A
Adapter, K-band to R-band	HP 11519A
Directional Coupler (10 dB)	HP K752C
10 dB Attenuator	HP 8491B Opt. 010
Cable Assembly, SMA Plugs	HP 8120-1578
Cable Assembly, RG-214/U with Type N Connectors (2 required)	HP 11500A

PROCEDURE:

.01 to 1.8 GHz FREQUENCY BAND (Internal Mixing):

a. Set spectrum analyzer controls as follows:

Set all Normal Settings (controls marked with green)

FREQUENCY BAND GHz	.01 — 1.8
INPUT ATTEN	10 dB
REF LEVEL	−10 dBm
REF LEVEL FINE	0
RESOLUTION BW	Coupled (pushed in)
FREQUENCY SPAN/DIV	1 MHz

b. Connect 100 MHz CAL OUTPUT signal to INPUT of spectrum analyzer and center signal on CRT with TUNING control.

c. Adjust FREQ CAL to indicate 0.100 GHz on FREQUENCY readout.

d. Connect equipment as shown in Configuration A of Figure 4-1 with comb generator connected to INPUT of spectrum analyzer.

e. Set comb generator for 10 MHz comb output. Adjust spectrum analyzer TUNING control for an indication of 0.010 GHz on FREQUENCY readout.

f. Set 10 MHz comb tooth on center graticule line using TUNING control. FREQUENCY readout should indicate:

Min.	Actual	Max.
.005 GHz	_____	.015 GHz

g. Set comb generator for 100 MHz comb output. Adjust spectrum analyzer TUNING control for an indication of 1.000 GHz on FREQUENCY readout.

Scans by ARTEK MEDIA =>

4-8. TUNING ACCURACY TEST (Cont'd)

h. Set 1 GHz comb tooth on center graticule line using TUNING control. FREQUENCY readout should indicate:

Min.	Actual	Max.
.995 GHz	_____	1.005 GHz

i. Adjust spectrum analyzer TUNING control for an indication of 1.800 GHz on FREQUENCY readout.

j. Set 1.8 GHz comb tooth on center graticule line using TUNING control. FREQUENCY readout should indicate:

Min.	Actual	Max.
1.795 GHz	_____	1.805 GHz

1.7 to 22 GHz FREQUENCY BANDs (Internal Mixing)

k. Set spectrum analyzer FREQUENCY BAND GHz to 1.7 — 4.1, FREQUENCY SPAN/DIV to 1 MHz, and RESOLUTION BW to OPTIMUM. Adjust TUNING control for an indication of 1.700 GHz on FREQUENCY readout (pull for rapid tuning).

l. Set 1.7 GHz comb tooth on center graticule line using TUNING control. FREQUENCY readout should indicate:

Min.	Actual	Max.
1.695 GHz	_____	1.705 GHz

m. Adjust spectrum analyzer TUNING control for an indication of 3.000 GHz on FREQUENCY readout. Set 3 GHz comb tooth on center graticule line using TUNING control. FREQUENCY readout should indicte:

Min.	Actual	Max.
2.994 GHz	_____	3.006 GHz

n. Adjust spectrum analyzer TUNING control for an indication of 4.100 GHz on FREQUENCY readout. Set 4.1 GHz comb tooth on center graticule line using TUNING control. FREQUENCY readout should indicate:

Min.	Actual	Max.
4.092 GHz	_____	4.108 GHz

o. Disconnect comb generator from spectrum analyzer input. Connect sweep oscillator and frequency counter as shown in Configuation A of Figure 4-1.

Scans by ARTEK MEDIA =>

4-8. TUNING ACCURACY TEST (Cont'd)

p. Check tuning accuracy at frequencies listed in Table 4-1. Set each frequency using the frequency counter. Adjust spectrum analyzer TUNING control to position signal on center graticule line. Indication on FREQUENCY GHz digital readout must be within the test limits given in Table 4-1.

Table 4-1. Tuning Accuracy Test Limits, 3.8 to 22 GHz Bands

Spectrum Analyzer		RF Source	FREQUENCY GHz Digital Readout Test Limits	
FREQUENCY BAND GHz	FREQUENCY SPAN/DIV (MHz)	FREQUENCY (GHz)*	Min.	Max.
3.8 – 8.5	1	3.800	3.793	3.807
3.8 – 8.5	1	6.000	5.988	6.012
3.8 – 8.5	1	8.500	8.403	8.517
5.8 – 12.9	1	5.800	5.789	5.811
5.8 – 12.9	1	8.000	7.984	8.016
5.8 – 12.9	1	12.900	12.875	12.925
8.5 – 18	1	8.500	8.483	8.517
8.5 – 18	1	12.500	12.475	12.525
8.5 – 18	1	18.000	17.964	18.036
10.5 – 22	1	10.500	10.479	10.521
10.5 – 22	1	16.500	16.467	16.533
10.5 – 22	1	22.000**	21.956	22.044

*Frequency set to within ±.05%.
**Use HP 8690B/8696A with appropriate adapters in place of 8620C/86290A, Configuration A of Figure 4-1.

14.5 to 40 GHz FREQUENCY BANDs (External Mixing)

q. Connect equipment as shown in Configuration B of Figure 4-1.

r. Set sweep oscillator frequency for indication of 23.000 ±0.010 GHz on frequency counter.

s. Press 14.5 – 26.6 FREQUENCY BAND GHz pushbutton on spectrum analyzer and adjust TUNING control for an indication of 23.00 GHz on FREQUENCY readout.

t. Adjust EXT MIXER BIAS for greatest peak (peaking will occur in more than one position of BIAS control).

u. Set FREQUENCY SPAN/DIV to 1 MHz and identify 23 GHz signal using SIG IDENT. Adjust TUNING control to position 23 GHz signal on center graticule line. FREQUENCY readout should indicate:

Min.	Actual	Max.
22.84 GHz	_____	23.16 GHz

Scans by ARTEK MEDIA =>

PERFORMANCE TESTS

4-8. TUNING ACCURACY TEST (Cont'd)

v. Set FREQUENCY SPAN/DIV to 10 MHz and press 22.9 — 40 FREQUENCY BAND GHz pushbutton. Adjust TUNING control for an indication of 23.00 GHz on FREQUENCY readout and repeat steps t and u.

4-9. SPAN WIDTH ACCURACY TEST

SPECIFICATION:

The frequency error for two points on the display for spans from 500 MHz/div to 200 kHz/div is less than ±5% of the indicated separation; for stabilized spans 100 kHz/div and less, the error is less than ± 15%.

DESCRIPTION:

The 500 MHz per division and 200 MHz per division span widths are checked using a wide-band source and a frequency counter. The source is set to 7 GHz and the spectrum analyzer is tuned to place the signal at the far-left graticule line. The source is then tuned to 11 GHz and the span error for 500 MHz per division is checked at the eighth graticule line. The 200 MHz per division span width accuracy is checked in the same manner.

The span width accuracy from 100 MHz per division down to 1 kHz per division is tested using a comb generator. Wide span widths (100 MHz to .5 MHz/div) are checked by using the 100 MHz, 10 MHz and 1 MHz comb generator outputs. Narrow span widths (.2 MHz to 1 kHz/div) are checked by using the comb generator output modulated by a function generator. Since the comb generator produces frequency components separated by a precisely determined frequency interval, the resultant spectral lines displayed on the CRT are evenly spaced when no span error exists in the instrument. Thus, span error is the cumulative variance of distance among the spectral line intervals displayed across the CRT. The amount of span error is determined by comparing the distance between the first eight graticule divisions to the display distance of the corresponding spectral line intervals.

CONFIGURATION A
(500 MHz and 200 MHz/Div.)

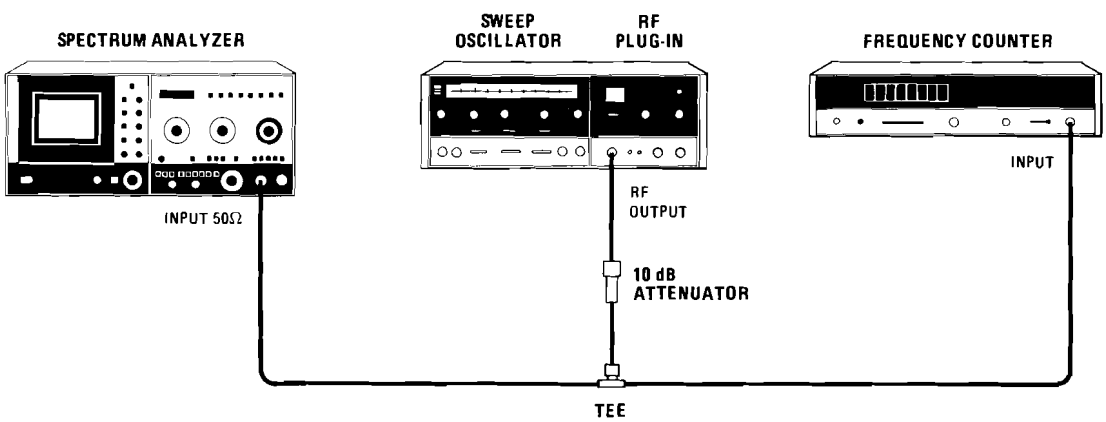

Figure 4-2. Span Width Accuracy Test Setup (1 of 2)

Scans by ARTEK MEDIA =>

PERFORMANCE TESTS

4-9. SPAN WIDTH ACCURACY TEST (Cont'd)

CONFIGURATION B
(100 MHz to 1 kHz/Div.)

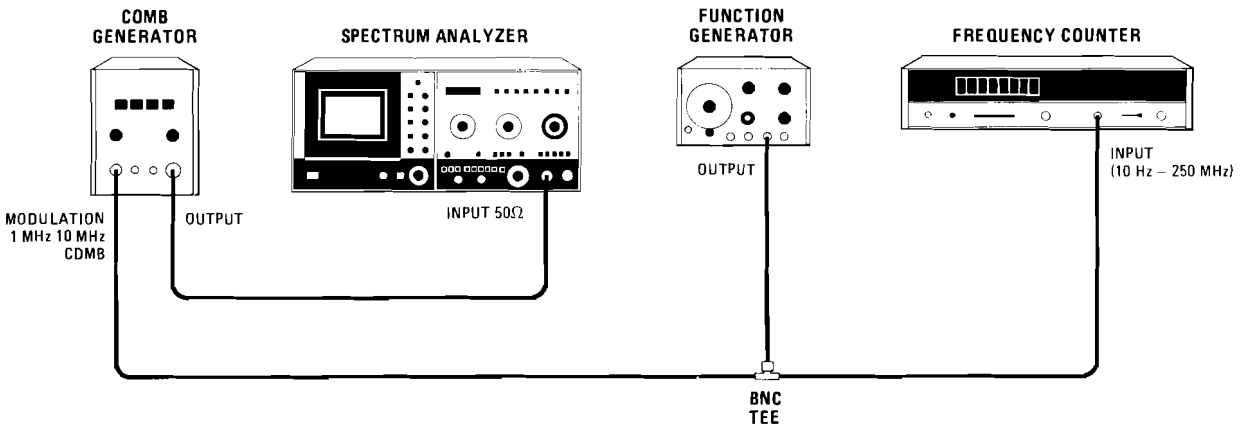

Figure 4-2. Span Width Accuracy Test Setup (2 of 2)

EQUIPMENT:

Sweep Oscillator/RF Plug-in	HP 8620C/86290A
Frequency Counter	HP 5340A Opt. H10
Comb Genertor	HP 8406A
Function Genertor	HP 3312A
10 dB Attenuator	HP 8491B, Opt. 010

PROCEDURE:

500 MHz and 200 MHz Per Division

a. Set spectrum analyzer controls as follows:

Set all Normal Settings (controls marked with green)

FREQUENCY BAND GHz	5.8 — 12.9
INPUT ATTEN	10 dB
REF LEVEL	−10 dBm
REF LEVEL FINE	0
RESOLUTION BW	Coupled (pushed in)
FREQUENCY SPAN/DIV	500 MHz

b. Connect equipment as shown in Configuration A of Figure 4-2.

c. Set sweep oscillator for CW output, 6.0 to 12.4 GHz band, and tune for a frequency counter indication of 7.000 ± .005 GHz.

d. Adjust spectrum analyzer TUNING control to position signal at graticule reference line (far left) of display (Should indicate approximately 9.5 GHz on FREQUENCY readout.)

Scans by ARTEK MEDIA =>

PERFORMANCE TESTS

4-9. SPAN WIDTH ACCURACY TEST (Cont'd)

e. Tune sweep oscillaor CW output for a frequency counter indication of 11.000 ± .005 GHz.

f. Measure error between signal peak and eighth graticue line. Error should not exceed ±0.4 division. (See Figure 4-3.)

g. Set spectrum analyzer FREQUENCY SPAN/DIV control to 200 MHz. Set TUNING control for a FREQUENCY readout of approximately 8 GHz.

h. Tune sweep oscillator CW output for a frequency counter indication of 7.000 ± .005 GHz. Adjust spectrum analyzer TUNING control to position signal at graticule reference line (far left) of display.

i. Tune sweep oscillator CW output for a frequency counter indication of 8.600 ± .005 GHz.

j. Measure error between signal peak and eighth graticule line. Error should not exceed ±0.4 division. (See Figure 4-3.)

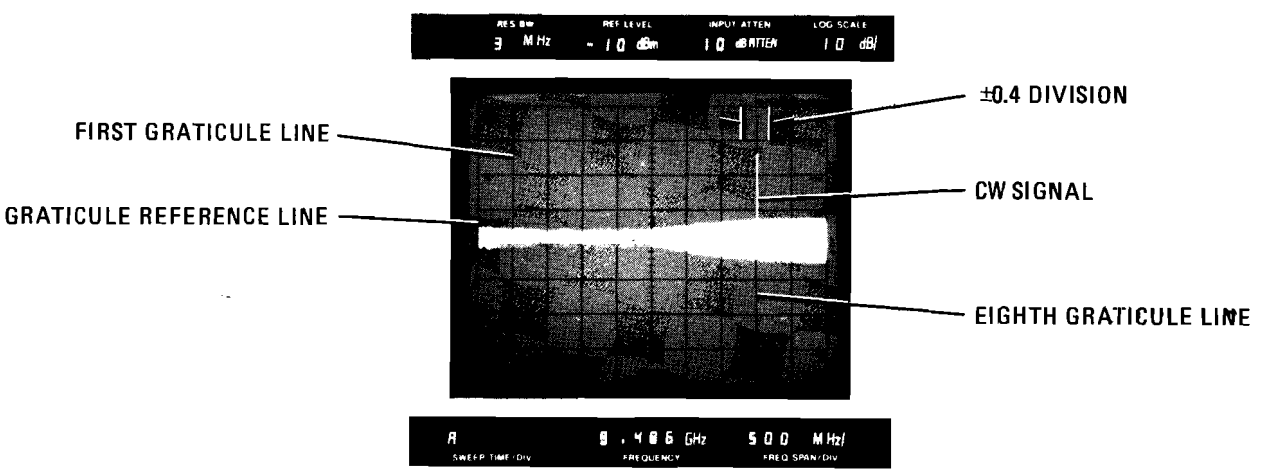

Figure 4-3. Span Width Accuracy Measurement, 500 MHz and 200 MHz per Division

k. Connect equipment as shown in Configuration B of Figure 4-2 without connecting function generator. Set comb generator for 100 MHz comb output.

l. Set spectrum analyzer FREQUENCY BAND GHz to .01 — 1.8, FREQUENCY SPAN/DIV control to 100 MHz. Set TUNING control for a FREQUENCY readout of 0.800 GHz.

m. Adjust spectrum analyzer TUNING control to position one spectral line (from comb generator) at graticule reference line (first graticule line at far left) of display. Measure error between ninth spectral line and eighth graticule line. Error should not exceed ± 0.4 division. (See Figure 4-4.)

Scans by ARTEK MEDIA =>

PERFORMANCE TESTS

4-9. SPAN WIDTH ACCURACY TEST (Cont'd)

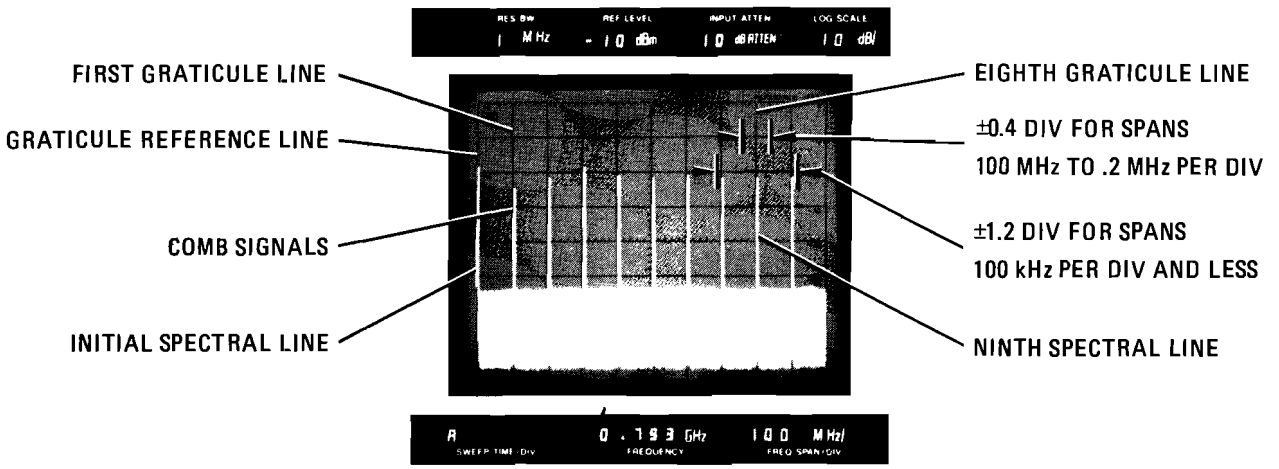

Figure 4-4. Span Width Accuracy Measurement, 100 MHz per Division and Less

n. Set FREQUENCY SPAN/DIV to 50 MHz. Adjust TUNING control to position one spectral line (from comb generator) at graticule reference line (first graticule line at far left) of display. Measure error between fifth spectral line and eighth graticule line. Error should not exceed ±0.4 division.

o. Set comb generator for 10 MHz comb output. Set spectrum analyzer FREQUENCY SPAN/DIV to 20 MHz and RESOLUTION BW to OPTIMUM. Adjust TUNING control to position one spectral line at graticule reference line. Measure error between seventeenth spectral line and eighth graticule line on display. Error should not exceed ±0.4 divison.

p. Set FREQUENCY SPAN/DIV to 10 MHz. Adjust TUNING control to position one spectral line at graticule reference line. Measure error between ninth spectral line and eighth graticue line. Error should not exceed ±0.4 division.

q. Set FREQUENCY SPAN/DIV to 5 MHz. Adjust TUNING control to position one spectral line at graticule reference line. Measure error between fifth spectral line and eighth graticule line. Error should not exceed ±0.4 division.

r. Set comb generator for 1 MHz comb output. Set spectrum analyzer FREQUENCY SPAN/DIV to 2 MHz and VIDEO FILTER to .1. Adjust TUNING control to position one spectral line at graticule reference line. Measure error between seventeenth spectral line and eighth graticule line. Error should not exceed ±0.4 division.

Scans by ARTEK MEDIA =>

PERFORMANCE TESTS

4-9. SPAN WIDTH ACCURACY TEST (Cont'd)

s. Set FREQUENCY SPAN/DIV to 1 MHz. Adjust TUNING control to position one spectral line at graticule reference line. Measure error between ninth spectral line and eighth graticule line. Error should not exceed ±0.4 division.

t. Set FREQUENCY SPAN/DIV to .5 MHz. Adjust TUNING control to position one spectral line at the graticule reference line. Measure error between fifth spectral line and eighth graticule line. Error should not exceed ±0.4 division.

u. Set comb generator for 10 MHz comb output and turn interpolation control on. Connect function generator output level high output to modulate the comb generator. Set function generator frequency to 200 ± 1 kHz, set function to negative pulse, and set output level control for a clean 200 kHz comb (approximately mid-position) on the spectrum analyzer display.

NOTE

It may be necessary to readjust function generator output level control and comb generator interpolation amplitude control to obtain desired presentation of comb.

v. Set spectrum analyzer FREQUENCY SPAN/DIV to .2 MHz. Adjust TUNING control to position one spectral line at graticule reference line. Measure error between ninth spectral line and eighth graticule line. Error should not exceed ±0.4 division.

100 kHz to 5 kHz Per Division:

w. Using procedure of step u and v, change spectrum analyzer FREQUENCY SPAN/DIV and function generator output frequency in accordance with Table 4-2. Adjust spectrum analyzer TUNING control to position one spectral line at graticule reference line. Measure the span error between ninth spectral line and eighth graticule line.

NOTE

It may be necessary to temporarily disable the AUTO STABILIZER to tune the spectrum analyzer TUNING control for best comb presentation.

Table 4-2. Narrow Span Width Error Measurement

Spectrum Analyzer		Function Generator Output Frequency*	Allowable Error (Max.)
FREQ SPAN/DIV	RESOLUTION BW		
100 kHz	OPTIMUM	100 kHz	±1.2 Divisions
50 kHz	OPTIMUM	50 kHz	±1.2 Divisions
20 kHz	OPTIMUM	20 kHz	±1.2 Divisions
10 kHz	OPTIMUM	10 kHz	±1.2 Divisions
5 kHz	OPTIMUM	5 kHz	±1.2 Divisions

*Check function generator output frequency using an electronic counter. Frequency readout should be within ±0.5% of desired audio frequency.

Scans by ARTEK MEDIA =>

PERFORMANCE TESTS

4-9. SPAN WIDTH ACCURACY TEST (Cont'd)

2 kHz and 1 kHz Per Division

x. Set spectrum analyzer AMPLITUDE SCALE to 5 dB (LOG/DIV), REF LEVEL to −70 dBm, VIDEO FILTER to .03, and FREQUENCY SPAN/DIV to 2 kHz.

y. Set function generator frequency to 4.00 ± .02 kHz. Adjust spectrum analyzer TUNING control to position one spectral line at graticule reference line. Measure error between fifth spectral line and eighth graticule line. Error should not exceed ± 1.2 divisions.

z. Set spectrum analyzer FREQUENCY SPAN/DIV to 1 kHz. Set function generator frequency to 2.00 ± .02 kHz and adjust spectrum analyzer TUNING control to position one spectral line at graticule reference line. Measure error between fifth spectral line and eighth graticule line. Error should not exceed ± 1.2 divisions.

4-10. RESOLUTION BANDWIDTH ACCURCY TEST

SPECIFICATION:

Individual resolution bandwidth 3 dB points:

< ± 15%

DESCRIPTION:

Resolution bandwidth accuracy is measured in the linear mode to eliminate log amplifier errors. Since half power is represented by a voltage ratio of 1.41, 5 divisions on the spectrum analyzer display represents half power (3 dB) points for a 7.1 division display.

$$\frac{1}{1.41} = \text{(Voltage Ratio)} = \frac{\text{X Div}}{\text{7.1 DIV}} \rightarrow \text{X DIV} = \frac{\text{7.1 DIV}}{1.4} = \text{5.0 DIV}$$

In the narrow bandwidths (10 kHz and below) a 321.4 MHz signal (first IF) is injected by connecting the output of the signal generator to the external mixer port of the spectrum analyzer. This IF injection method provides the high degree of stability required when measuring narrow resolution bandwidths.

Scans by ARTEK MEDIA =>

PERFORMANCE TESTS

4-10. RESOLUTION BANDWIDTH ACCURACY TEST (Cont'd)

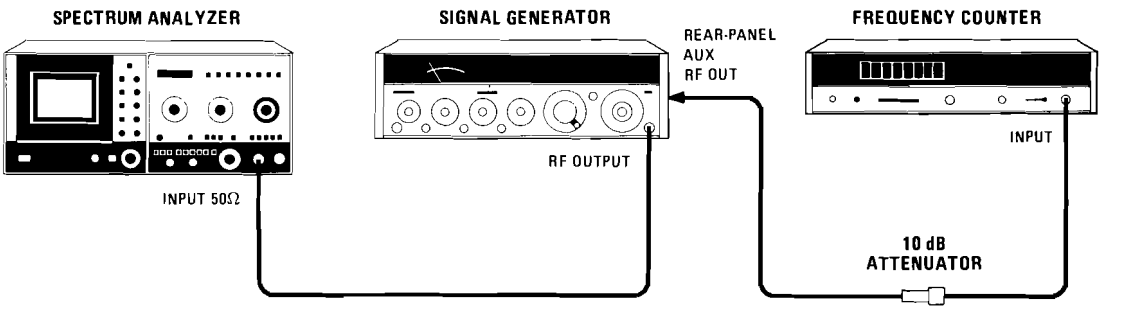

Figure 4-5. Resolution Bandwidth Accuracy Test Setup

EQUIPMENT:

Signal Generator ..... HP 8640B
Frequency Counter ..... HP 5340A
10 dB Attenuator ..... HP 8491 B Opt. 010

PROCEDURE:

a. Set spectrum analyzer controls as follows:

Set all normal Settings (controls marked with green)
FREQUENCY BAND GHz ..... .01 — 1.8
INPUT ATTEN ..... 20 dB
REF LEVEL ..... —10 dBm
REF LEVEL FINE 0
RESOLUTION BW ..... 3 MHz, Uncoupled
FREQUENCY SPAN MODE ..... ZERO SPAN
AMPLITUDE SCALE ..... LIN
AUTO STABILIZER ..... OFF

b. Set signal generator for an unmodulated 100 MHz output at approximately −10 dBm. Set 8640B counter mode to internal.

c. Adjust spectrum analyzer TUNING control to locate peak of 100 MHz signal on CRT. Reduce signal generator output if necessary.

d. Adjust signal generator output level to position trace at 7.1 divisions above graticule baseline.

e. Tune signal generator frequency until trace drops to 5 divisions above graticule baseline. Record frequency displayed on 8640B.

_____ MHz

Scans by ARTEK MEDIA =>

PERFORMANCE TESTS

4-10. RESOLUTION BANDWIDTH ACCURACY TEST (Cont'd)

f. Tune signal generator frequency in opposite direction of step e until trace peaks (7.1 divisions) and then drops to 5 divisions above graticule baseline. Record frequency displayed on 8640B.

_____ MHz

g. The difference between results of steps e and f is the measured resolution bandwidth at 3 dB points.

Min.	Actual	Max.
2.55 MHz	_____	3.45 MHz

h. Set RESOLUTION BW to 1 MHz. Tune signal generator to 100 MHz and repeat steps c through g.

Min.	Actual	Max.
850 kHz	_____	1.15 MHz

i. Set RESOLUTION BW to 300 kHz. Tune signal generator to 100 MHz and repeat steps c through g.

Min.	Actual	Max.
255 kHz	_____	345 kHz

j. Set RESOLUTION BW to 100 kHz. Tune signal generator to 100 MHz and repeat steps c through g.

Min.	Actual	Max.
85 kHz	_____	115 kHz

k. Set RESOLUTION BW to 30 kHz. Tune signal generator to 100 MHz and press EXPAND X10 pushbutton to provide greater resolution on frequency readout (remember to include overflow when reading frequency). Enable spectrum analyzer AUTO STABILIZER OFF (pushbutton out) and repeat steps c through g.

Min.	Actual	Max.
25.5 kHz	_____	34.5 kHz

l. Set RESOLUTION BW to 10 kHz. Set EXT MIXER BIAS adjustment fully counterclockwise.

m. Tune signal generator to 321.4 MHz. Connect signal generator output to spectrum analyzer EXT MIXER BNC connector. Press 1.7 — 4.1 FREQUENCY BAND GHz pushbutton.

n. Connect frequency counter as shown in Figure 4-5 and set frequency counter resolution to 10 Hz.

o. Tune signal generator FINE TUNE control to peak signal on CRT. Adjust output level to position trace at 7.1 divisions above graticule baseline.

p. Tune signal generator frequency, using FINE TUNE control, until trace drops to 5 divisions above graticule baseline. Record frequency displayed on frequency counter.

_____ MHz

Scans by ARTEK MEDIA =>

PERFORMANCE TESTS

4-10. RESOLUTION BANDWIDTH ACCURACY TEST (Cont'd)

q. Tune signal generator frequency (FINE TUNE) in opposite direction of step p until trace peaks (7.1 divisions) and then drops to 5 divisions above graticule baseline. Record frequency displayed on frequency counter.

_____ MHz

r. The difference between results of steps p and q is the measured resolution bandwidth at 3 dB points.

Min.	Actual	Max.
8.5 kHz	_____	11.5 kHz

s. Set spectrum analyzer RESOLUTION BW to 3 kHz and repeat steps o through r.

Min.	Actual	Max.
2.55 kHz	_____	3.45 kHz

t. Set spectrum analyzer RESOLUTION BW to 1 kHz and repeat steps o through r.

Min.	Actual	Max.
0.85 kHz	_____	1.15 kHz

4-11. RESOLUTION BANDWIDTH SELECTIVITY TEST

SPECIFICATION:

(60 dB/3 dB bandwidth ratio) < 15:1 for bandwidths 1 kHz to 3 MHz.

DESCRIPTION:

The 60 dB bandwidth is measured for all resolution bandwidth settings (1 kHz to 3 MHz). The 60 dB to 3 dB resolution bandwidth ratio is then computed by dividing the 3 dB bandwidth values, obtained in the Resolution Bandwidth Accuracy Test, into the 60 dB bandwidth values for each resolution bandwidth setting.

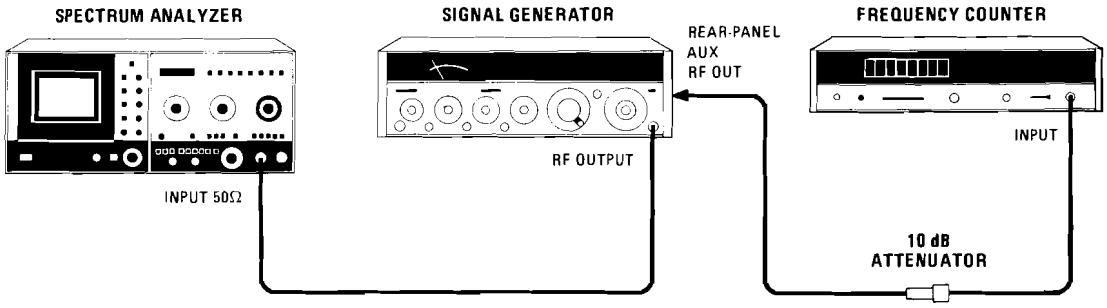

Figure 4-6. Resolution Bandwidth Selectivity Test Setup

Scans by ARTEK MEDIA =>

PERFORMANCE TESTS

4-11. RESOLUTION BANDWIDTH SELECTIVITY TEST (Cont'd)

EQUIPMENT:

Signal Generator ..... HP 8640B
Frequency Counter ..... HP 5340A
10 dB Attenuator ..... HP 8491B Opt. 010

PROCEDURE:

a. Set spectrum analyzer controls as follows:

Set all Normal Settings (controls marked with green)
FREQUENCY BAND GHz ..... 1.7 — 4.1
INPUT ATTEN ..... 20 dB
REF LEVEL ..... −10 dBm
REF LEVEL FINE 0
RESOLUTION BW ..... 1 kHz, Uncoupled
FREQUENCY SPAN MODE ..... ZERO SPAN
AMPLITUDE SCALE ..... 10 dB LOG/DIV
VIDEO FILTER ..... .03

b. Connect equipment as shown in Figure 4-6. Tune signal generator to 321.4 MHz and set output level to approximately −10 dBm. Connect signal generator output to spectrum analyzer EXT MIXER BNC connector.

c. Tune signal generator FINE TUNE control to peak signal on CRT. Adjust output level to position trace at top graticule line.

d. Tune signal generator frequency (FINE TUNE) until trace drops to two divisions above graticule baseline. Record frequency displayed on frequency counter.

_____ MHz

e. Tune signal generator frequency in opposite direction of step d until trace peaks and then drops to two divisions above graticule baseline. Record frequency displayed on frequency counter.

_____ MHz

f. The difference between results of steps d and e is the measured bandwidth at 60 dB points.

_____ kHz (1 kHz BW)

g. Set RESOLUTION BW to 3 kHz and repeat steps c through f.

_____ kHz (3 kHz BW)

Scans by ARTEK MEDIA =>

PERFORMANCE TESTS

4-11. RESOLUTION BANDWIDTH SELECTIVITY TEST (Cont'd)

h. Set RESOLUTION BW to 10 kHz and repeat steps c through f.

_____ kHz (10 kHz BW)

i. Connect signal generator output to spectrum analyzer INPUT 50Ω connector. Tune signal generator to 100 MHz and set output level to approximately 0 dBm.

j. Set spectrum analyzer FREQUENCY BAND GHz to .01 — 1.8, INPUT ATTEN to 10 dB, REF LEVEL to 0 dBm, RESOLUTION BW to 30 kHz, and TUNING for an indication of 0.100 GHz on FREQUENCY readout (disable AUTO STABILIZER while using coarse TUNING).

k. Tune signal generator frequency to peak signal on CRT. Adjust output level to position trace at top graticule line.

l. Tune signal generator frequency until trace drops to two divisions above graticule baseline. Record frequency displayed on 8640B.

_____ MHz

m. Tune signal generator frequency in opposite direction of step l until trace peaks and then drops to two divisions above graticule baseline. Record frequency displayed on 8640B.

_____ MHz

n. The difference between results of steps l and m is the measured bandwidth at 60 dB points.

_____ MHz (30 kHz BW)

o. Set RESOLUTION BW to 100 kHz and repeat steps k through n.

_____ MHz (100 kHz BW)

p. Set RESOLUTION BW to 300 kHz and repeat steps k through n.

_____ MHz (300 kHz BW)

q. Set RESOLUTION BW to 1 MHz and repeat steps k through n.

_____ MHz (1 MHz BW)

r. Set RESOLUTION BW to 3 MHz and repeat steps k through n.

_____ MHz (3 MHz BW)

s. Record the measured 3 dB bandwidths from Paragraph 4-10, steps g through k and steps r through t in Table 4-3.

t. Record the measured 60 dB bandwidths from Paagraph 4-11, steps f through h and steps n through r in Table 4-3.

Scans by ARTEK MEDIA =>

PERFORMANCE TESTS

4-11. RESOLUTION BANDWIDTH SELECTIVITY TEST (Cont'd)

Table 4-3. Resolution Bandwidth Selectivity

RESOLUTION BW Setting	MEASURED 3 dB BW	MEASURED 60 dB BW	Resolution Bandwidth Selectivity (60 dB BW/3 dB BW)
3 MHz	_____	_____	_____
1 MHz	_____	_____	_____
300 kHz	_____	_____	_____
100 kHz	_____	_____	_____
30 kHz	_____	_____	_____
10 kHz	_____	_____	_____
3 kHz	_____	_____	_____
1 kHz	_____	_____	_____

u. Compute Resolution Bandwidth Selectivity for each RESOLUTION BW setting, dividing the measured 60 dB bandwidth by the measured 3 dB bandwidth for each setting. All ratios should be less than 15:1.

4-12. RESIDUAL FM TEST

SPECIFICATION:

Total residual FM:

Stabilized: < 200 Hz P-P in 0.1 sec.
Unstabilized: < 10 kHz P-P in 0.1 sec.

DESCRIPTION:

A comb generator is used to supply a stable 1.8 GHz signal to the spectrum analyzer. The relationship between amplitude and frequency on the linear portion of the trace is determined for a given frequency span width and resolution bandwidth. The residual FM is then slope detected by using the spectrum analyzer as a fixed-tuned receiver (ZERO SPAN). Using the determined relationship between amplitude and frequency, the test limits (in divisions) for the demodulated residual FM are determined.

Scans by ARTEK MEDIA =>

PERFORMANCE TESTS

4-12. RESIDUAL FM TEST (Cont'd)

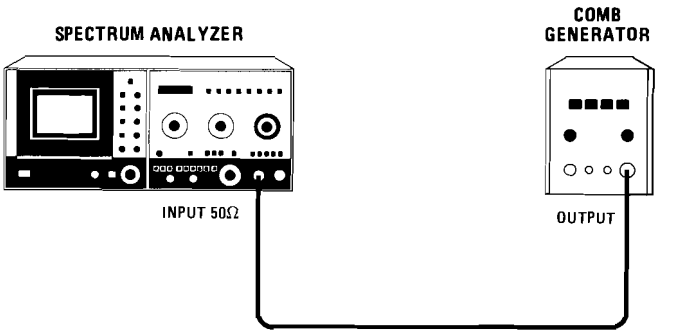

Figure 4-7. Residual FM Test Setup

EQUIPMENT:

Comb Generator . . . . . HP 8406A

PROCEDURE:

Stabilized:

a. Set spectrum analyzer controls as follows:

Set all Normal Settings (controls marked with green)

FREQUENCY BAND GHz	.01 — 1.8
INPUT ATTEN	10 dB
REF LEVEL	−30 dBm
RESOLUTION BW	Coupled (pushed in)
FREQUENCY SPAN/DIV	.2 MHz
AMPLITUDE SCALE	LIN
SWEEP TIME/DIV	.1 SEC
VIDEO FILTER	.1
TUNING	1.800 GHz

b. Connect comb generator output to spectrum analyzer INPUT as shown in Figure 4-7. Set comb generator for maximum output amplitude.

c. Locate 1.8 GHz comb tooth and center it on CRT. Reduce FREQUENCY SPAN/DIV to 2 kHz keeping signal centered on CRT with FINE TUNING control.

d. Adjust REF LEVEL FINE control to place signal peak at top graticule line. Carefully adjust TUNING control so upward slope of signal intersects the CENTER FREQUENCY graticule line one division down from the top as shown in Figure 4-8.

NOTE

With AUTO STABILIZER on, the coarse TUNING control (large knob) can be adjusted in very small increments to "fine tune" the position of the signal displayed. If signal disappears from display, set FREQUENCY SPAN/DIV to .2 MHz and repeat steps c and d.

Scans by ARTEK MEDIA =>

PERFORMANCE TESTS

4-12. RESIDUAL FM TEST (Cont'd)

e. Note the distance from the signal skirt at the horizontal center graticule line to the CENTER FREQUENCY graticule line at the center of the CRT. (In Figure 4-8 the distance is 0.2 division.)

_____ Div.

f. Determine the test limit by using the following formula:

Test Limit: _____ Div. (P-P per One Horizontal Division)

$$X = \frac{\text{Specification (P-P)}}{\frac{\text{A div}}{\text{k div}} \times \text{FREQ. SPAN/DIV}}$$

Where: X = Test limit (peak-to-peak) in vertical divisions per one horizontal division.
A div = Distance noted in step e or step m.
k div = Linear vertical portion of trace = 3 div.

Typical Example (Stabilized mode): In Figure 4-8, distance A is 0.2 division and distance k (a constant) is 3 divisions. Therefore:

$$X = \frac{200\text{ Hz}}{\frac{0.2\text{ div}}{3\text{ div}} \times 2\text{ kHz/Div}} = \frac{200\text{ Hz}}{.067 \times 2\text{ kHz/Div}} = 1.5\text{ Div (P-P per one Horiz Division)}$$

g. Press ZERO SPAN pushbutton and adjust TUNING control to place trace between center graticule line and seventh graticule line (linear portion of signal).

NOTE

With AUTO STABILIZER on, the coarse TUNING control (large knob) can be adjusted in small increments to "fine tune" the position of the signal displayed.

h. Adjust PERSIST and INTENSITY controls to provide high persistence with minimum blooming.

i. Set SWEEP TRIGGER to SINGLE and ERASE CRT. Press START/RESET pushbutton to display one sweep as shown in Figure 4-9. The maximum peak-to-peak variation should not exceed the test limit determined in step f for each horizontal division (since SWEEP TIME/DIV is .1 SEC and residual FM is specified in a time interval of 0.1 second).

Scans by ARTEK MEDIA =>

4-12. RESIDUAL FM TEST (Cont'd)

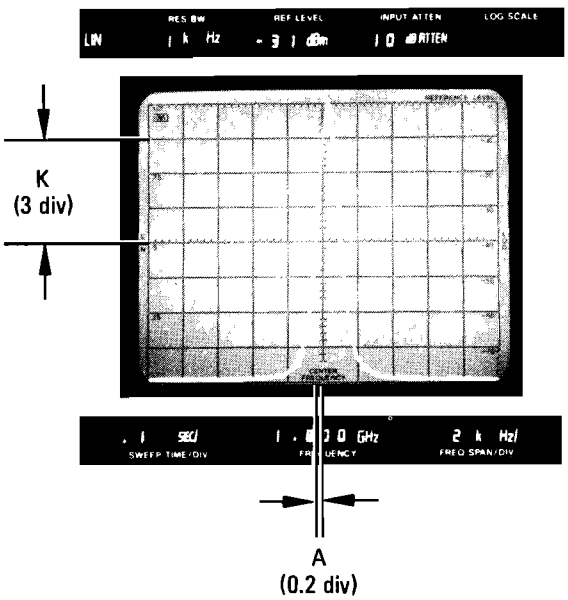

Figure 4-8. Residual FM to AM Conversion Display

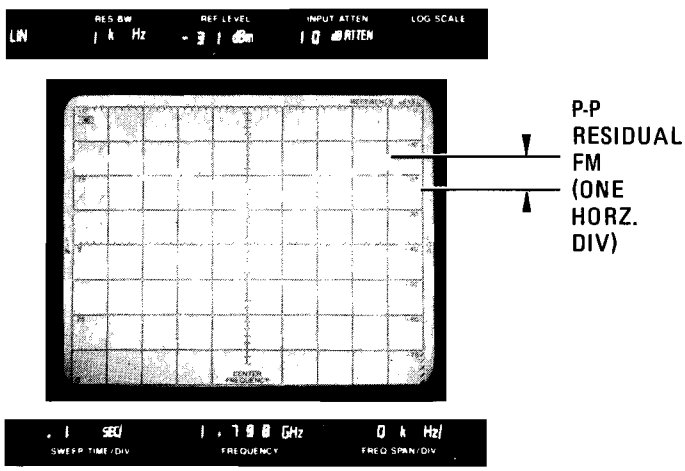

Figure 4-9. Residual FM Display

Unstabilized:

j. Set FREQUENCY SPAN MODE to PER DIV, FREQUENCY SPAN/DIV to 10 kHz (pull to uncouple), and RESOLUTION BW to 30 kHz. Set SWEEP TRIGGER to FREE RUN and press AUTO STABILIZER to OFF (pushbutton in).

k. Locate 1.8 GHz comb tooth and center it on CRT. Press AUTO STABILIZER to ON (pushbutton out) to return to stabilized mode.

Scans by ARTEK MEDIA =>

PERFORMANCE TESTS

4-12. RESIDUAL FM TEST (Cont'd)

l. Adjust REF LEVEL FINE control to place signal peak at top graticule line. Carefully adjust TUNING control so upward slope of signal intersects the CENTER FREQUENCY graticule line one division down from the top as shown in Figure 4-8.

NOTE

With AUTO STABILIZER on, the coarse TUNING control (large knob) can be adjusted in very small increments to "fine tune" the position of the signal displayed. If signal disappears from display, press AUTO STABILIZER to OFF (pushbutton in) and repeat steps k and l.

m. Note the distance from the signal skirt to the CENTER FREQUENCY graticule line at the center of the CRT (should be approximately 1.3 divisions).

_____ Div.

n. Determine the test limit using formula given in step f. Use unstabilized specification (10 kHz) and 10 kHz FREQUENCY SPAN/DIV.

Test Limit: _____ Div. (P-P per One Horizontal Division)

Typical Example (Unstabilized mode):

If A = 1.3 divisions, then:

$$X = \frac{10\text{ kHz}}{\frac{1.3\text{ div.}}{3\text{ div}} \times 10\text{ kHz/div.}}$$

$$X = \frac{1}{0.43}\text{ div.}$$

X = 2.3 div. (P-P per One Horizontal Division)

o. Press AUTO STABILIZER to OFF (pushbutton in for unstabilized mode). Press ZERO SPAN Pushbutton and adjust FINE TUNING control to place trace between center graticule line and seventh graticule line.

p. Adjust PERSIST and INTENSITY controls to provide high persistence with minimum blooming.

q. Set SWEEP TRIGGER to SINGLE and ERASE CRT. Press START/RESET pushbutton to display one sweep as shown in Figure 4-9. The maximum peak-to-peak variation should not exceed the test limit detrmined in step n.

Scans by ARTEK MEDIA =>

PERFORMANCE TESTS

4-13. NOISE SIDEBANDS TEST

SPECIFICATION:

At least 70 dB down, greater than 30 kHz from center of CW signal when set to a 1 kHz RESOLUTION BANDWIDTH and a 10 Hz (.01) VIDEO FILTER.

DESCRIPTION:

A comb generator is used to supply a stable 1.8 GHz signal to the spectrum analyzer. The analyzer RESOLUTION BW is set to 1 kHz and VIDEO FILTER is set to .01. The peak of the 1.8 GHz signal is set at 10 dB above REFERENCE LEVEL graticule line to allow greater readability of the noise sidebands. The noise-associated sidebands and unwanted responses measured close to the signal must be more than 70 dB down (below −60 graticule line), greater than 30 kHz from center of CW signal.

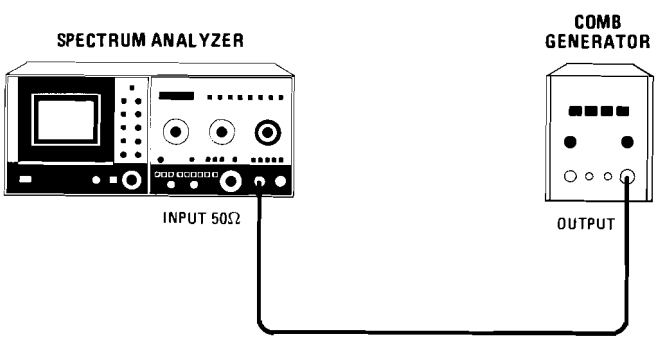

Figure 4-10. Noise Sidebands Test Setup

EQUIPMENT:

Comb Generator ..... HP 8406A

PROCEDURE:

a. Set spectrum analyzer controls as follows:

Set all Normal Settings (controls marked with green)
FREQUENCY BAND GHz ..... .01 — 1.8
INPUT ATTEN ..... 0 dB
REF LEVEL ..... −30 dBm
RESOLUTION BW ..... Coupled (pushed in)
FREQUENCY SPAN/DIV ..... .2 MHz
TUNING ..... 1.800 GHz

b. Connect comb generator output to spectrum analyzer INPUT as shown in Figure 4-10. Set comb generator for maximum output amplitude.

Scans by ARTEK MEDIA =>

PERFORMANCE TESTS

4-13. NOISE SIDEBANDS TEST (Cont'd)

c. Locate 1.8 GHz comb tooth and center it on CRT. Reduce FREQUENCY SPAN/DIV to 10 kHz keeping signal centered on CRT with FINE TUNING control.

d. Adjust REF LEVEL FINE control to place signal peak at top graticule line (REFERENCE LEVEL).

e. Set REF LEVEL control to −40 dBm to place signal peak 10 dB above REFERENCE LEVEL.

f. Set SWEEP TRIGGER to SINGLE and set VIDEO FILTER to .01. Set PERSIST control fully clockwise and press START/RESET pushbutton. If blooming occurs, reduce INTENSITY, ERASE CRT, and press START/RESET pushbutton again.

g. Observe noise level within three divisions (30 kHz) on each side of CW signal. Noise sidebands should be greater than 70 dB below cw signal level (below −60 graticule line).

4-14. RESIDUAL RESPONSES TEST

SPECIFICATION:

Residual Responses (no signal present at input): With 0 dB input attenuation on fundamental mixing (.01 to 4.1 GHz): < −90 dBm.

DESCRIPTION:

Signals present on the display with no input to the analyzer are residual responses. A reference level is selected that will allow the operator to see signals less than −90 dBm. The two fundamental mixing bands (.01 — 1.8 GHz and 1.7 — 4.1 GHz) are slowly swept through their entire ranges in several incremental spans while observing the display. Any residual responses that appear must be less than −90 dBm.

EQUIPMENT:

50Ω Termination ..... HP 909A Opt. 012

Scans by ARTEK MEDIA =>

4-14. RESIDUAL RESPONSES TEST (Cont'd)

PROCEDURE:

a. Connect 50-ohm termination to INPUT 50Ω port and set spectrum analyzer controls as follows:

Set all Normal Settings (controls marked with green)

FREQUENCY BAND GHz	.01 — 1.8
INPUT ATTEN	0 dB
REF LEVEL	−60 dBm
REF LEVEL FINE	0
RESOLUTION BW	10 kHz, Uncoupled
FREQUENCY SPAN/DIV	10 MHz
VIDEO FILTER	.1
SWEEP TRIGGER	SINGLE
TUNING	0.060 GHz
PERSIST	Fully Clockwise
INTENSITY	12 O'clock
BASELINE CLIPPER	Fully Clockwise

b. Press START/RESET pushbutton and turn BASELINE CLIPPER control counterclockwise until just the peaks of the noise are displayed. ERASE CRT and press START/RESET again. Any residual responses that appear must be less than −90 dBm (below the −30 graticule line).

c. Adjust TUNING control for an indication of 0.150 GHz on FREQUENCY readout. Press START/RESET pushbutton and observe display.

d. Continue tuning spectrum analyzer in 100 MHz increments (0.250 GHz, 0.350 GHz, and so on) up to 1.750 GHz. Check for residual responses in each position of the TUNING control by pressing START/RESET pushbutton and observing CRT display. ERASE CRT occasionally to prevent blooming.

e. Set RESOLUTION BW to 3 kHz. Leave FREQUENCY SPAN/DIV set to 10 MHz. Set SWEEP TIME/DIV to 5 SEC and pres 1.7 — 4.1 FREQUENCY BAND GHz pushbutton. Adjust TUNING control for an indication of 1.750 GHz on FREQUENCY readout and set BASELINE CLIPPER control fully clockwise.

f. Repeat step b.

g. Tune spectrum analyzer in 100 MHz increments (1.850 GHz, 1.950 GHz, and so on) up to 4.050 GHz. Check for residual responses in each position of the TUNING control by pressing START/RESET pushbutton and observing CRT display. ERASE CRT occasionally to prevent blooming.

4-15. AVERAGE NOISE LEVEL TEST

SPECIFICATION:

Maximum average noise level (internal mixer) with 1 kHz IF bandwidth, 0 dB attenuation, and .003 (3 Hz) video filter is given in Table 4-4.

Scans by ARTEK MEDIA =>

PERFORMANCE TESTS

4-15. AVERAGE NOISE LEVEL TEST (Cont'd)

Table 4-4. Average Noise Level Specification

FREQUENCY BAND GHz	First IF (MHz)	Harmonic Mode	Average Noise Level	
			Standard (dBm)	Option 200 (dBμV)
.01 – 1.8	2050	1–	–110	–3
1.7 – 4.1	321.4	1–	–106	+1
3.8 – 8.5	321.4	2–	–102	+5
5.8 – 12.9	321.4	3–	–92	+15
8.5 – 18	321.4	4+	–83	+24
10.5 – 22	321.4	5+	–72	+35

DESCRIPTION:

Maximum average noise level is checked in all internal mixer frequency bands. Each frequency band is slowly swept with FREQUENCY SPAN/DIV control set to F, RESOLUTION BW set to 1 kHz, and VIDEO FILTER set to .003. Maximum persistence is used to store all six internal mixer frequency band traces. The traces are observed and average noise level for each frequency band is recorded.

PROCEDURE:

a. Set spectrum analyzer controls as follows:

Set all Normal Settings (controls marked with green)
FREQUENCY BAND GHz ..... .01 — 1.8
INPUT ATTEN ..... 0 dB
REF LEVEL ..... –70 dBm
REF LEVEL FINE 0
RESOLUTION BW ..... 1 kHz, Uncoupled
FREQUENCY SPAN/DIV ..... F
SWEEP TRIGGER ..... SINGLE
SWEEP TIME/DIV ..... 2 SEC
VIDEO FILTER ..... .003
PERSIST ..... Fully Clockwise
INTENSITY ..... Fully Counterclockwise

b. Press START/RESET pushbutton and adjust INTENSITY control until trace appears on CRT. Press ERASE pushbutton and again press START/RESET pushbutton.

c. When first sweep is ended, press 1.7 — 4.1 FREQUENCY BAND GHz pushbutton and then START/RESET pushbutton. Continue pressing the next FREQUENCY BAND GHz pushbutton and then START/RESET pushbutton at the end of each sweep until all of the internal mixer frequency bands (dark gray pushbuttons) have been swept.

d. Press STORE and adjust STORE INTEN control as required. Observe the six individual traces and determine the maximum average noise level for each internal mixing FREQUENCY BAND. (See Figure 4-11.) Disregard LO feedthrough signal at beginning of .01 — 1.8 GHz band. Record results in Table 4-5.

Scans by ARTEK MEDIA =>

PERFORMANCE TESTS

4-15. AVERAGE NOISE LEVEL TEST (Cont'd)

Table 4-5. Average Noise Level

FREQUENCY BAND GHz	First IF (MHz)	Harmonic Mode	Average Noise Level		
			Maximum		Actual
			Standard (dBm)	Opt. 200 (dBμV)	
.01 – 1.8	2050	1–	–110	–3	_____
1.7 – 4.1	321.4	1–	–106	+1	_____
3.8 – 8.5	321.4	2–	–102	+5	_____
5.8 – 12.9	321.4	3–	–92	+15	_____
8.5 – 18	321.4	4+	–83	+24	_____
10.5 – 22	321.4	5+	–72	+35	_____

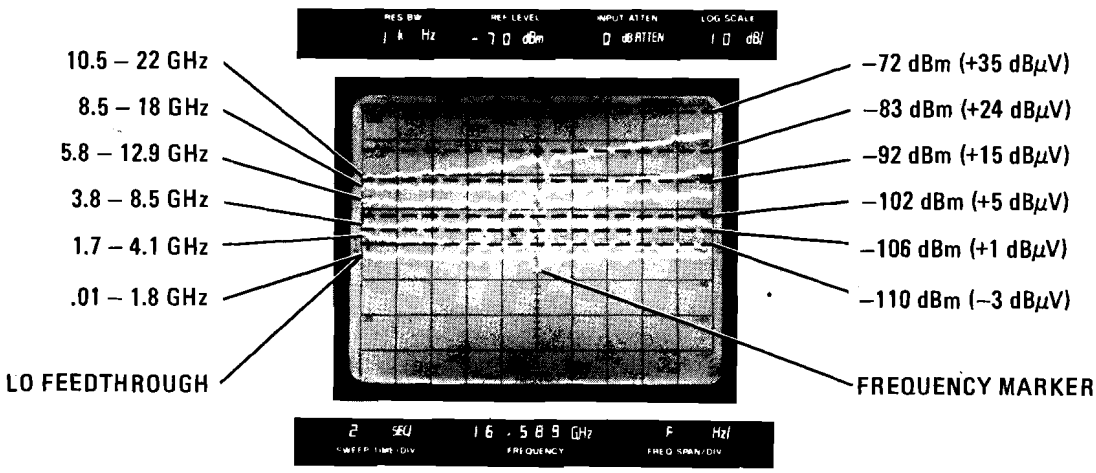

Figure 4-11. Average Noise Level (Sensitivity) Internal Mixing Frequency Bands

e. Set PERSIST control fully counterclockwise and press WRITE pushbutton. Reduce INTENSITY.

Scans by ARTEK MEDIA =>

PERFORMANCE TESTS

4-16. REFERENCE LEVEL VARIATION TEST

SPECIFICATION:

Reference level variation (Input Attenuator at 0 dB):

10 dB steps: < ±0.5 dB (0 to −70 dBm)
< ±1.0 dB (0 to −90 dBm)

Vernier (0 to −12 dB) continuous: Maximum error > ± 0.5 dB, when read from Reference Level Fine control.

DESCRIPTION:

The reference level variation is tested by checking the IF gain steps in 1 dB per division log and in linear scale. Specially calibrated step attenuators (355 C/D Option H80) are used to check the 10 dB steps and the vernier (REF LEVEL FINE control).

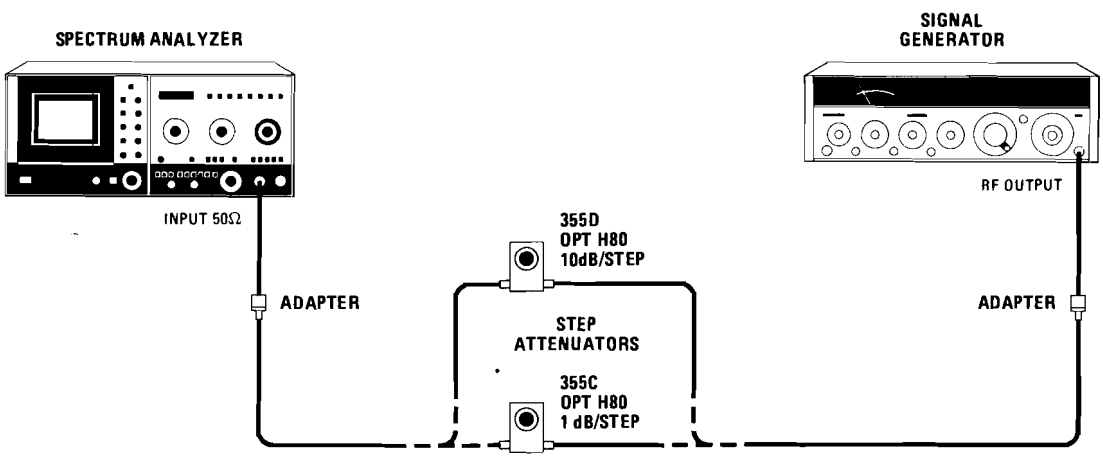

Figure 4-12. Reference Level Variation Test Setup

EQUIPMENT:

Signal Generator ..... HP 8640B
Step Attenuator (1 dB/Step) ..... HP 355C Opt. H80
Step Attenuator (10 dB/Step) ..... HP 355D Opt. H80
Adapter, Type N Male to BNC
Female (2 required) ..... HP 1250-0780

Scans by ARTEK MEDIA =>

PERFORMANCE TESTS

4-16. REFERENCE LEVEL VARIATION TEST (Cont'd)

PROCEDURE:

a. Set spectrum analyzer controls as follows:

Set all Normal Settings (controls marked with green)
FREQUENCY BAND GHz ..... .01 — 1.8
INPUT ATTEN ..... 0 dB
REF LEVEL ..... 0 dBm
REF LEVEL FINE 0
RESOLUTION BW ..... Coupled (pushed in)
FREQUENCY SPAN/DIV ..... 1 MHz
TUNING ..... 0.100 GHz

b. Set signal generator for an unmodulated 100 MHz output at approximately 0 dBm.

Reference Level Variation (10 dB Steps) in Log Mode:

c. Connect equipment as shown in Figure 4-12 using 10 dB/step attenuator. Set step attenuator at 0 dB and adjust spectrum analyzer TUNING control to center signal on CRT. Set VIDEO FILTER to .01.

d. Adjust signal generator output level to place peak of trace at top graticule line. Set spectrum analyzer AMPLITUDE SCALE to 1 dB(LOG/DIV). Set FREQUENCY SPAN/DIV to 10 kHz. Pull to uncouple and set RESOLUTION BW to 10 kHz. Center signal on CRT.

e. Adjust signal generator output level or spectrum analyzer REF LEVEL FINE control until peak of trace is at sixth division (from bottom graticule line). Set the 8565A REF LEVEL control and step attenuator to settings indicated in Table 4-6. Record deviation from the sixth division reference for each setting.

Table 4-6. Reference Level Variation (10 dB steps) in Log Mode

REF LEVEL Setting (dBm)	Step Attenuator Setting (dB)	Deviation from 6th Division (dB)	Step Attenuator Error (Calibration)* (dB)	Corrected Deviation (dB)
0	0	0 (Ref.)	Ref.	0 (Ref.)
−10	10	_____	_____	_____
−20	20	_____	_____	_____
−30	30	_____	_____	_____
−40	40	_____	_____	_____
−50	50	_____	_____	_____
−60	60	_____	_____	_____
−70	70	_____	_____	_____
−80**	80	_____	_____	_____
−90**	90	_____	_____	_____

*Attenuations > dial settings are positive (+). Attenuations < dial settings are negative (−). For example 9.99 dB calibration for a 10 dB attenuator setting represents an error of −0.01 dB.
**Set VIDEO FILTER to .003 for maximum noise averaging.

Scans by ARTEK MEDIA =>

PERFORMANCE TESTS

4-16. REFERENCE LEVEL VARIATION TEST (Cont'd)

f. To compute the corrected deviation, add the step attenuator error to the deviation from 6th Division for each setting. The difference between the maximum positive and the maximum negative corrected deviation values from 0 to −70 dBm should not exceed 1.0 dB (±0.5 dB). The difference between the maximum positive and the maximum negative corrected deviation values from 0 to −90 dBm should not exceed 2.0 dB (±1.0 dB).

Reference Level Variation (10 dB Steps) in Linear Mode:

g. Set spectrum analyzer AMPLITUDE SCALE to LIN. Set REF LEVEL control to 0 dBm and set step attenuator to 0 dB.

h. Adjust signal generator output level and spectrum analyzer REF LEVEL FINE control until peak of trace is at sixth division. Set the 8565A REF LEVEL control and step attenuator to settings indicated in Table 4-7. Record deviation from sixth division reference for each setting.

i. Using Table 4-8, convert deviation from 6th division in LIN to deviation from 6th division in dB for each setting. Record dB values in Table 4-7.

j. To compute the corrected deviation, add the step attenuator error to the deviation from 6th division in dB. The difference between the maximum positive and the maximum negative corrected deviation values from 0 to −70 dBm should not exceed 1.0 dB (±0.5 dB). The difference between the maximum positive and the maximum negative corrected deviation values from 0 to −90 dBm should not exceed 2.0 dB (±1.0 dB).

Table 4-7. Reference Level Variation (10 dB Steps) in Linear Mode

REF LEVEL Setting (dBm)	Step Attenuator Setting (dB)	Deviation from 6th Division in Linear Mode (div.)	Deviation from 6th Division in dB*	Step Attenuator Error (Calibration)** (dB)	Corrected Deviation (dB)
0	0	0 (Ref.)	0 (Ref.)	Ref.	0 (Ref.)
−10	10	_____	_____	_____	_____
−20	20	_____	_____	_____	_____
−30	30	_____	_____	_____	_____
−40	40	_____	_____	_____	_____
−50	50	_____	_____	_____	_____
−60	60	_____	_____	_____	_____
−70	70	_____	_____	_____	_____
−80	80	_____	_____	_____	_____
−90	90	_____	_____	_____	_____

*Use Table 4-8 to convert deviation in linear mode to deviation in dB.
**Attenuations > dial settings are positive (+). Attenuations < dial settings are negative(−).

Scans by ARTEK MEDIA =>

PERFORMANCE TESTS

4-16. REFERENCE LEVEL VARIATION TEST (Cont'd)

Table 4-8. Conversions from Deviation in Linear Mode to Deviation in dB

POSITIVE DEVIATIONS (Above 6th division from graticule baseline)		NEGATIVE DEVIATIONS (Below 6th division from graticule baseline)	
Linear (divisions)	dB	Linear (divisions)	dB
0	0	0	0
+ .1	+0.14	− .1	−0.15
+ .2	+0.28	− .2	−0.29
+ .3	+0.42	− .3	−0.45
+ .4	+0.56	− .4	−0.60
+ .5	+0.70	− .5	−0.76
+ .6	+0.82	− .6	−0.92
+ .7	+0.96	− .7	−1.08
+ .8	+1.09	− .8	−1.24
+ .9	+1.21	− .9	−1.41
+1.0	+1.34	−1.0	−1.58
+1.1	+1.46	−1.1	−1.76
+1.2	+1.58	−1.2	−1.94
+1.3	+1.70		
+1.4	+1.82		
+1.5	+1.94		

Reference Level Fine (Vernier) variation:

k. Replace 10 dB/step attenuator with 1 dB/step attenuator. Set step attenuator to 0 dB. Set spectrum analyzer REF LEVEL control to 0 dBm, REF LEVEL FINE control to 0, AMPLITUDE SCALE to 1 dB (LOG/DIV), and VIDEO FILTER to OFF.

l. Adjust signal generator output level until peak of trace is at sixth division. Set step attenuator to settings indicated in Table 4-9, readjusting REF LEVEL FINE control to place peak of trace at sixth graticule line after each change in attenuator setting. Record the REF LEVEL FINE setting for each attenuator setting.

m. To compute the corrected REF LEVEL FINE setting, subtract the step attenuator error from the REF LEVEL FINE setting. The difference between the maximum positive and the maximum negative corrected REF LEVEL FINE settings should not exceed 1.0 dB (±0.5 dB).

Scans by ARTEK MEDIA =>

PERFORMANCE TESTS

4-16. REFERENCE LEVEL VARIATION TEST (Cont'd)

Table 4-9. Reference Level Fine (Vernier) Variation

Step Attenuator Setting (dB)	REF LEVEL FINE Setting* (dB)	Step Attenuator Error (Calibration)** (dB)	Corrected REF LEVEL FINE Setting (dB)
0	0 (Ref.)	Ref.	0 (Ref.)
1	_____	_____	_____
2	_____	_____	_____
3	_____	_____	_____
4	_____	_____	_____
5	_____	_____	_____
6	_____	_____	_____
7	_____	_____	_____
8	_____	_____	_____
9	_____	_____	_____
10	_____	_____	_____
11	_____	_____	_____
12	_____	_____	_____

*Readjust REF LEVEL FINE control to place peak of trace at sixth graticule line after each change in attenuator setting.
**Attenuations > dial settings are positive (+). Attenuations < dial settings are negative (–).

4-17. GAIN COMPRESSION TEST

SPECIFICATION:

For signal levels below MAXIMUM input setting, gain compression is less than 1 dB.

DESCRIPTION:

Gain compression is checked by changing the input signal from 10 dB less than the MAXIMUM input setting, to the level of the MAXIMUM input setting. The signal will compress (indicate less than a 10 dB change in signal level). The amount of compression must be less than 1 dB.

Scans by ARTEK MEDIA =>

PERFORMANCE TESTS

4-17. GAIN COMPRESSION TEST (Cont'd)

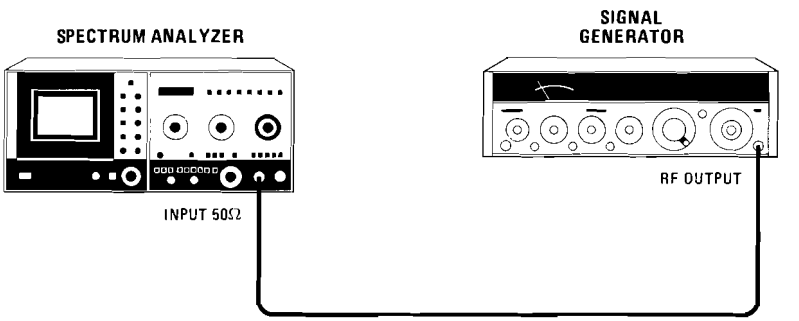

Figure 4-13. Gain Compression Test Setup

EQUIPMENT:

Signal Generator ..... HP 8640B

PROCEDURE:

a. Set spectrum analyzer controls as follows:

Set all Normal Settings (controls marked with green)
FREQUENCY BAND GHz ..... .01 — 1.8
INPUT ATTEN ..... 0 dB
REF LEVEL ..... −10 dBm
REF LEVEL FINE 0
RESOLUTION BW ..... Coupled (pushed in)
FREQUENCY SPAN/DIV ..... .2 MHz
TUNING ..... 0.100 GHz

b. Set signal generator for an unmodulated 100 MHz output at −10 dBm. Adjust spectrum analyzer TUNING control to center signal on CRT.

c. Set FREQUENCY SPAN/DIV to 10 kHz keeping signal centered with FINE TUNING control. Pull to uncouple and set RESOLUTION BW to 10 kHz.

d. Set AMPLITUDE SCALE to 1 dB (LOG/DIV). Center signal on CRT and adjust REF LEVEL FINE control to place peak of signal at top graticule line.

e. Set REF LEVEL to 0 dBm and set signal generator output to 0 dBm (use meter on 8640B for fine adjustment of output level). Signal should not compress more than 1 dB (one major division).

f. Set INPUT ATTEN to 10 dB and set REF LEVEL to 0 dBm. Center signal on CRT and adjust REF LEVEL FINE control to place peak of signal at top graticule line.

g. Set REF LEVEL to +10 dBm and set signal generator output to +10 dBm (use meter on 8640B for fine adjustment of output level). Signal should not compress more than 1 dB (one major division).

Scans by ARTEK MEDIA =>

PERFORMANCE TESTS

4-17. GAIN COMPRESSION TEST (Cont'd)

h. Set INPUT ATTEN to 20 dB and set REF LEVEL to +10 dBm. Center signal on CRT and adjust REF LEVEL FINE control to place peak of signal at top graticule line.

i. Set REF LEVEL to +20 dBm and set signal generator output to +20 dBm (use meter on 8640B for fine adjustment of output level). Signal should not compress more than 1 dB (one major division).

4-18. INPUT ATTENUATOR ACCURACY TEST

SPECIFICATION:

Input Attenuator (at preselector input, 70 dB range in 10 dB steps):

Step size variation (for steps from 0 to 60 dB):
< ±1.0 dB .01 to 18 GHz

Maximum cumulative error (from 0 to 60 dB):
< ±2.4 dB .01 to 18 GHz

DESCRIPTION:

The input attenuator accuracy is tested at 100 MHz using RF substitution (external, calibrated attenuator). The accurcy is also checked at 18 GHz using IF substitution. The IF gain reference level variation, previously recorded in Table 4-6, is taken into account when measuring attenuator accuracy at 18 GHz.

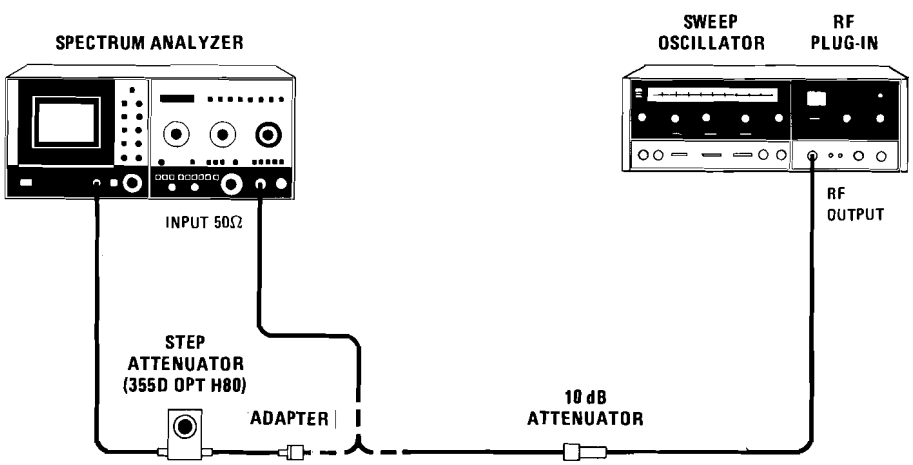

Figure 4-14. Input Attenuator Accuracy Test Setup

EQUIPMENT:

Sweep Oscillator/RF Plug-in ..... HP 8620C/86290A
Step Attenuator (10 dB/step) ..... HP 355D Opt. H80
10 dB Attenuator ..... HP 8491B, Opt. 010
Adapter, Type N Male to BNC Female ..... HP 1250-0780

Scans by ARTEK MEDIA =>

PERFORMANCE TESTS

4-18. INPUT ATTENUATOR ACCURACY TEST (Cont'd)

PROCEDURE:

a. Set spectrum controls as follows:

Set all Normal Settings (controls marked with green)
FREQUENCY BAND GHz. . . . . .01 — 1.8
INPUT ATTEN . . . . . 60 dB
REF LEVEL . . . . . 0 dBm
RESOLUTION BW . . . . . Coupled (pushed in)
FREQUENCY SPAN/DIV . . . . . .2 MHz
TUNING. . . . . 0.100 GHz

b. Connect equipment as shown in Figure 4-14 using CAL OUTPUT signal and step attenuator. Set step attenuator to 0 dB. Adjust spectrum analyzer TUNING control to center signal on CRT.

c. Pull to uncouple and set FREQUENCY SPAN/DIV to 10 kHz keeping signal centered with FINE TUNING control. RESOLUTION BW should remain at 10 kHz.

d. Set AMPLITUDE SCALE to 1 dB (LOG/DIV) and set VIDEO FILTER to .01. Adjust REF LEVEL FINE control to place peak of signal at sixth division (from bottom graticule line).

e. Set the 8565A INPUT ATTEN (push in to set) and step attenuator to settings indicated in Table 4-10. Record deviation from sixth division for each setting.

Table 4-10. Input Attenuator Accuracy, 100 MHz

INPUT ATTEN Setting (dB)	Step Attenuator Setting (dB)	Deviation from 6th Division (dB)	Step Attenuator Error (Calibration)*	INPUT ATTEN Corrected Deviation (dB)
70	0	0 (Ref.)	Ref.	0 (Ref.)
60	10	_____	_____	_____
50	20	_____	_____	_____
40	30	_____	_____	_____
30	40	_____	_____	_____
20	50	_____	_____	_____
10	60	_____	_____	_____
0	70	_____	_____	_____

*Attenuations > dial settings are positive (+). Attenuations < dial settings are negative (−). For example, 9.99 dB calibration for a 10 dB attenuator setting represents an error of −0.01 dB.

f. To compute the corrected deviation, add the step attenuator error to the deviation from 6th division for each setting. The corrected deviation should not exceed ±1.0 dB between any two adjacent settings of the input attenuator.

Scans by ARTEK MEDIA =>

PERFORMANCE TESTS

4-18. INPUT ATTENUATOR ACCURACY TEST (Cont'd)

g. Record the maximum positive and maximum negative corrected deviation values computed in Table 4-10. The difference between these two values (total deviation) should not exceed ±2.4 dB.

——— dB Max Pos. Corrected Deviation
——— dB Max Neg. Corrected Deviation
——— dB Max Cumulative Error (Total Deviation)

h. Disconnect step attenuator from spectrum analyzer input and connect sweep oscillator output through 10 dB attenuator as shown in Figure 4-14.

i. Set spectrum analyzer to Normal Settings. Set INPUT ATTEN to 0 dB and set REF LEVEL to 0 dBm. Set FREQUENCY BAND GHz to 8.5 — 18. Set FREQUENCY SPAN/DIV (coupled) to 2 MHz and adjust TUNING control for an indication of 18.0 GHz on FREQUENCY readout.

j. Set sweep oscillator for a 18.0 GHz CW signal with maximum internally leveled output power. Adjust sweep oscillator CW and CW vernier controls to center signal on CRT display.

k. Set AMPLITUDE SCALE to 1 dB (LOG/DIV) and adjust REF LEVEL FINE control to place peak of signal at sixth division (from bottom graticule line). Reduce sweep oscillator power if necessary.

l. Press ZERO SPAN Pushbutton and set VIDEO FILTER to NOISE AVG. Adjust FINE TUNING control to peak trace on CRT display and adjust REF LEVEL FINE control to place trace at sixth division.

m. Set INPUT ATTEN to 10 dB and return REF LEVEL control to 0 dBm. Do not adjust REF LEVEL FINE control.

n. Adjust FINE TUNING control to peak trace and record deviation from 6th division in Table 4-11.

o. Set INPUT ATTEN to 20 dB and return REF LEVEL control to 0 dBm. Do not adjust REF LEVEL FINE control. Repeat step n.

p. Set INPUT ATTEN to 30 dB and return REF LEVEL control to 0 dBm. Do not adjust REF LEVEL FINE control. Repeat step n.

q. Remove 10 dB attenuator and connect cable from sweep oscillator output directly to analyzer input. Set REF LEVEL control to +10 dBm. Adjust FINE TUNING control to peak trace and adjust REF LEVEL FINE control to place trace at deviation recorded for 30 dB INPUT ATTEN setting.

r. Set INPUT ATTEN to 40 dB and return REF LEVEL control to +10 dBm. Do not adjust REF LEVEL FINE control. Repeat step n.

s. Set INPUT ATTEN to 50 dB and return REF LEVEL control to +10 dBm. Do not adjust REF LEVEL FINE control. Repeat step n.

t. Set INPUT ATTEN to 60 dB and return REF LEVEL control to +10 dBm. Do not adjust REF LEVEL FINE control. Repeat step n.

Scans by ARTEK MEDIA =>

PERFORMANCE TESTS

4-18. INPUT ATTENUATOR ACCURACY TEST (Cont'd)

Table 4-11. Input Attenuator Accuracy, 18 GHz

INPUT ATTEN Setting (dB)	Deviation from 6th Division (dB)	REF LEVEL Corrected Deviation* (dB)	INPUT ATTEN Corrected Deviation (dB)
0	0 (Ref.)	0 (Ref.) (0)	0 (Ref.)
10	_____	_____ (–10)	_____
20	_____	_____ (–20)	_____
30	_____	_____ (–30)	_____
40	_____	_____ (–30)	_____
50	_____	_____ (–40)	_____
60	_____	_____ (–50)	_____

*From Table 4-6.

u. Record REF LEVEL corrected deviation from Table 4-6 in Table 4-11. (Note that REF LEVEL corrected deviation for INPUT ATTEN setings of 30 dB and 40 dB are the same.)

v. To compute the corrected deviation, subtract the REF LEVEL corrected deviation from the deviation from the 6th division for each setting (see example). The corrected deviation should not exceed ±1.0 dB between any two adjacent settings of the input attenuator.

Example:

INPUT ATTEN Setting (dB)	Deviation from 6th Division (dB)	REF LEVEL Corrected Deviation* (dB)	Corrected Deviation (dB)
0	0 (Ref.)	0 (Ref.) (0)	0 (Ref.)
10	–0.1	–0.2 (–10)	+0.1
20	+0.3	–0.1 (–20)	+0.4
30	–0.2	+0.1 (–30)	–0.3
40	+0.2	+0.1 (–30)	+0.1

w. Record the maximum positive and maximum negative corrected deviation values computed in Table 4-11. The difference between these two values should not exceed ±2.4 dB.

_____ dB Max Pos. Corrected Deviation
_____ dB Max Neg. Corrected Deviation
_____ dB Max Cumulative Error (Total Deviation)

Scans by ARTEK MEDIA =>

PERFORMANCE TESTS

4-19. CALIBRATOR OUTPUT ACCURACY TEST

SPECIFICATION:

Calibrator output:
−10 dBm ± 0.3 dB
100 MHz ± 10 kHz

DESCRIPTION:

The calibrator output level is measured using a power meter. The frequency of the calibrator output signal is measured using the counter input of the HP 8640B.

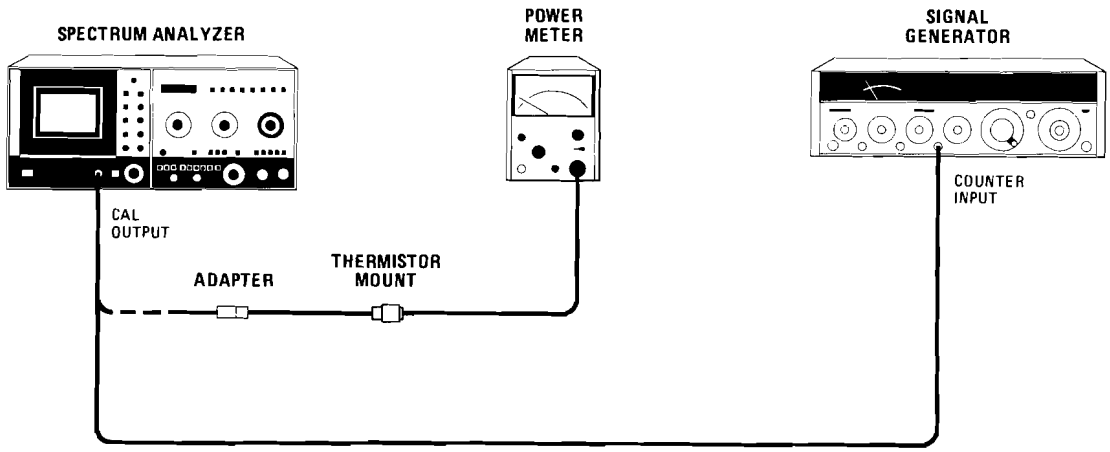

Figure 4-15. Calibrator Output Accuracy Test Setup

EQUIPMENT:

Power Meter ..... HP 432A
Thermistor Mount ..... HP 8478B
Signal Generator ..... HP 8640B
Adapter, Type N Female to BNC Male ..... HP 1250-0077

PROCEDURE:

a. Zero and calibrate the power meter. Connect thermistor mount, through adapter, directly to CAL OUTPUT port and measure power level. Calibrator output level should be −10 dBm ±0.3 dB.

b. Disconnect thermistor mount/adapter and connect CAL OUTPUT to counter input of HP 8640B. Set counter mode to expand X10 and external. Calibrator output frequency should be 100 MHz ± 10 kHz.

Scans by ARTEK MEDIA =>

PERFORMANCE TESTS

4-20. FREQUENCY RESPONSE TEST

SPECIFICATION:

Frequency Response (with 0 or 10 dB of Input Attenuation): Frequency response includes input attenuator, preselector and mixer response plus mixing mode gain variation (band to band).

DESCRIPTION:

Frequency response is checked in each internal mixing band. The spectrum analyzer is internally swept in FULL BAND mode and the RF input signal is very slowly swept across the entire FREQUENCY BAND selected. The resulting display is a "picket fence" which varies in heighth across the CRT. Since the RF source is leveled and held quite flat across each frequency band, variations in amplitude on the display represent the frequency response of the spectrum analyzer. The 10.5 to 22 GHz FREQUENCY BAND requires two different test setups but is performed in the same manner. Since leveling within reasonable limits becomes difficult from 18 GHz to 22 GHz, the RF output at the power splitter is characterized and compensated for when making the measurement from 18 GHz to 22 GHz.

CONFIGURATION A

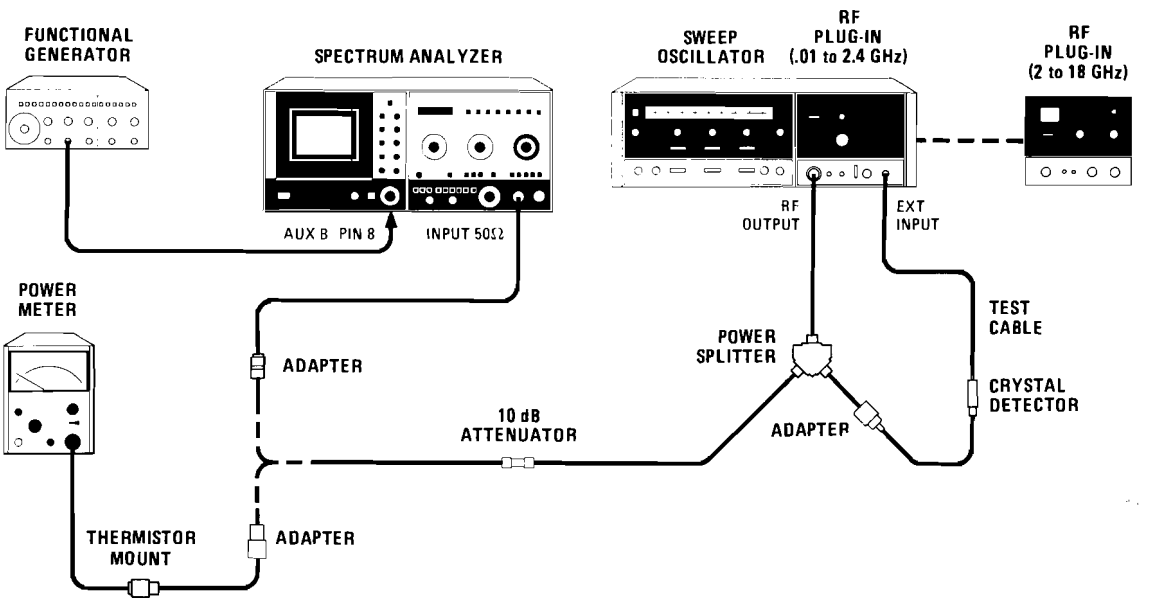

Figure 4-16. Frequency Response Test Setup (1 of 2)

Scans by ARTEK MEDIA =>

PERFORMANCE TESTS

4-20. FREQUENCY RESPONSE TEST (Cont'd)

CONFIGURATION B

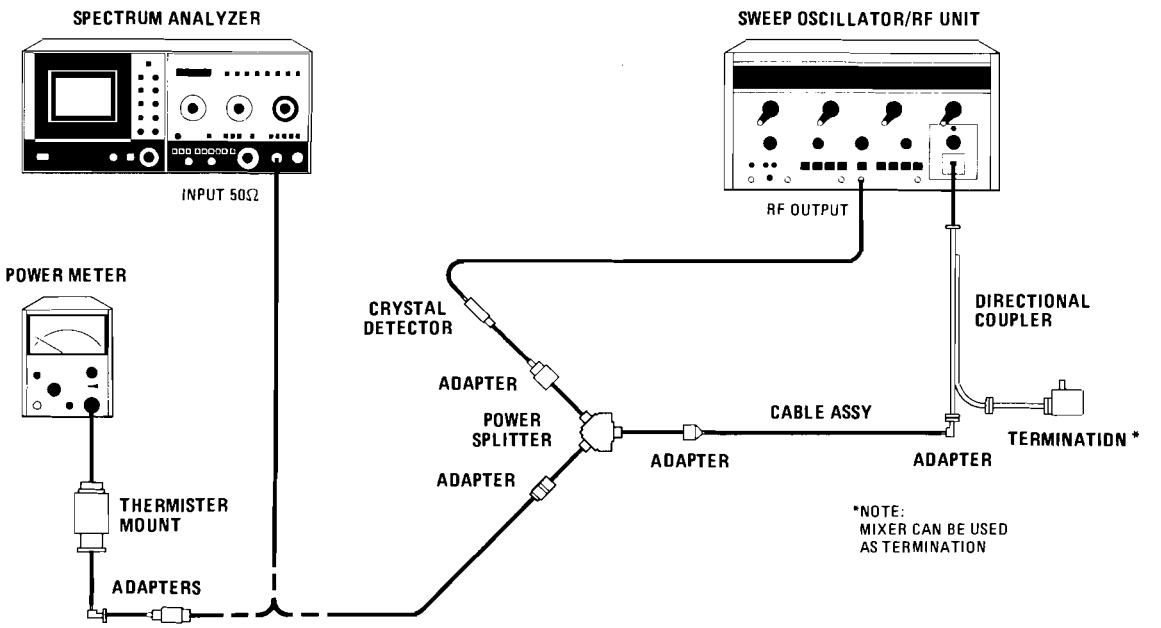

Figure 4-16. Frequency Response Test Setup (2 of 2)

EQUIPMENT:

Sweep Oscillator . . . . . HP 8620C/86222A/86290A
Sweep Oscillator/RF Unit . . . . . HP 8690B/8696A
Power Meter . . . . . HP 432A
Thermistor Mount . . . . . HP K486A
Thermistor Mount 8478B
Power Splitter . . . . . HP 11667A Opt. 002
Crystal Detector . . . . . HP 33330C
10 dB Attenuator . . . . . HP 8492A
Test Cable, SMA Female to BNC Male
(Part of Service Package, HP P/N 08565-60100) . . . . . HP 11592-60001
Adapter, APC-7 to Type N Male . . . . . HP 11525A
Adapter, APC-7 to Type N Female . . . . . HP 11524A
Adapter, APC-7 to SMA Female . . . . . HP 11534A
Adapter, Waveguide to SMA Jack (2 required) . . . . . Narda 4608
Adapter, N Plug/SMA Jack . . . . . HP 1250-1250
Adapter, Type N Female to SMA Female . . . . . HP 86290-60005
Cable Assembly . . . . . HP 8120-1578
Function Generator . . . . . HP 3312A

Scans by ARTEK MEDIA =>

PERFORMANCE TESTS

4-20. FREQUENCY RESPONSE TEST (Cont'd)

PROCEDURE:

a. Set spectrum analyzer controls as follows:

Set all Normal Settings (controls marked with green)
FREQUENCY BAND GHz ..... .01 — 1.8
INPUT ATTEN ..... 0 dB
REF LEVEL ..... 0 dBm
REF LEVEL FINE 0
RESOLUTION BW ..... 3 MHz, Uncoupled
FREQUENCY SPAN/DIV ..... 2 MHz
TUNING ..... 0.100 GHz

b. Connect spectrum analyzer CAL OUTPUT to INPUT 50Ω and center signal on CRT. Set AMPLITUDE SCALE (LOG/DIV) to 2 dB and adjust REF LEVEL FINE control to position peak of signal at one division below center horizontal graticule line (five divisions down from vertical REFERENCE LEVEL).

Frequency Response, .01 to 18 GHz Bands

c. Disconnect CAL OUTPUT signal from INPUT 50Ω. Using .01 to 2.4 GHz source, connect equipment as shown in Configuation A of Figure 4-16. Connect output of power splitter, through 10 dB attenuator and adapter, to thermistor mount. With RF power off, zero the power meter. Turn RF power on.

d. Set sweep oscillator for 100 MHz and adjust RF power level for a power meter indiction of −8 dBm. Connect output of power splitter through 10 dB attenuator and adapter directly (do not use cable) to INPUT 50Ω of spectrum analyzer. Peak of signal should be at center horizontal graticule line ± one minor division (±0.3 dB). If not, recheck sweep oscillator output level making sure that power meter has been properly calibrated and zeroed before making the measurement.

e. Set spectrum analyzer FREQUENCY SPAN MODE to FULL BAND and set TUNING control fully counterclockwise (lowest frequency). Set BASELINE CLIPPER to 12 o'clock position. Set sweep oscillator to cover entire FREQUENCY BAND selected.

NOTE

To properly set band edges using HP 8620C, use marker sweep and set sweep oscillator to manual sweep mode. Set manual sweep control fully counterclockwise and adjust start marker control until signal is at left-hand edge of spectrum analyzer display. Set sweep oscillator manual sweep control fully clockwise and adjust stop marker until signal is at right-hand edge of spectrum analyzer display.

f. Set spectrum analyzer PERSIST control fully clockwise. Set sweep oscillator for automatic internal sweep at slowest sweep time (100 seconds). Slowly adjust sweep oscillator sweep time vernier for display similar to that of Figure 4-17. Read greatest positive and greatest negative deviations from center horizontal graticule line. Frequency response (deviation from center horizontal graticule line) should not exceed ± 1.2 dB.

Scans by ARTEK MEDIA =>

PERFORMANCE TESTS

4-20. FREQUENCY RESPONSE TEST (Cont'd)

NOTE

If the frequency response appears to be out of specification near a band edge (referring to all bands), use a frequency counter to ensure the frequency in question is within the specified band. This may be necessary as the FULL BAND mode frequency span is slightly beyond the specified band edges.

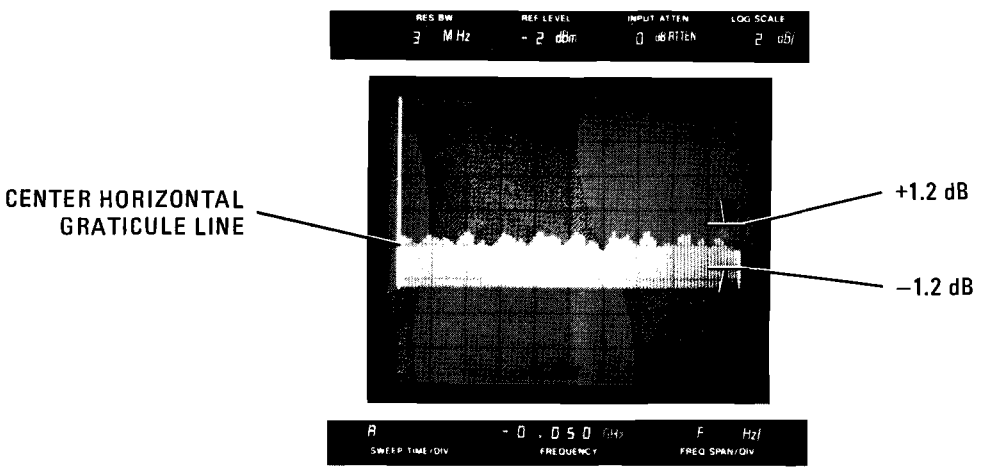

Figure 4-17. Typical Frequency Response, .01 to 1.8 GHz

g. Set spectrum analyzer INPUT ATTEN control to 10 dB and set REF LEVEL control to 0 dBm. Press ERASE pushbutton.Read greatest positive and negative deviations from center horizontal graticule line. Frequency response should not exceed ± 1.2 dB.

h. Remove .01 to 2.4 GHz RF plug-in from mainframe and replace with 2 to 18 GHz RF plug-in. Remove 10 dB attenuator and connect power splitter directly to spectrum analyzer INPUT 50Ω. Select band 4 (2.0 – 18 GHz) on 8620C sweep oscillator.

i. Set spectrum analyzer FREQUENCY BAND GHz to 1.7 – 4.1 Set PERSIST control fully counterclockwise. Set sweep oscillator to CW mode and adjust CW control to center signal on CRT CENTER FREQUENCY line. Set sweep oscillator to ΔF x 10. Set mode switch to manual sweep and set manual sweep control fully counterclockwise. Adjust ΔF control until signal is at left-hand edge of CRT display. Set manual sweep control fully clockwise. Signal should be at right-hand edge of CRT display. If necessary, readjust ΔF and CW.controls slightly to cover entire FREQUENCY BAND (1.7 to 4.1 GHz).

Scans by ARTEK MEDIA =>

PERFORMANCE TESTS

4-20. FREQUENCY RESPONSE TEST (Cont'd)

j. Set PRESELECTOR PEAK control to center of green region. Apply a 1 kHz 1V peak-to-peak sine wave from a function generator to AUX B pin 8. This signal modulates the YTF (YIG tuned filter) and is equivalent to peaking the PRESELECTOR PEAK at all frequencies.

k. Disconnect power splitter from spectrum analyzer input and measure output at power splitter port with power meter. Slowly tune through the entire frequency band using the sweep oscillator manual sweep control. Note the maximum and minimum excursions and set manual sweep control for a power meter indication midway between the maximum and minimum excursions. Turn RF power off and zero the power meter. Turn RF power on and adjust RF plug-in power level control for a power meter indication of −8 dBm. Reconnect power splitter to spectrum analyzer input.

l. Set spectrum analyzer PERSIST control fully clockwise. Set sweep oscillator mode switch to automatic sweep and press spectrum analyzer ERASE pushbutton. Read greatest positive and negative deviations from center horizontal graticule line. Frequency response should not exceed ±1.7 dB.

m. Set spectrum analyzer INPUT ATTEN control to 0 dB and set REF LEVEL control to 0 dBm. Press ERASE pushbutton. Read greatest positive and negative deviations from center horizontal graticule line. Frequency response should not exceed ± 1.7 dB.

n. Set spectrum analyzer FREQUENCY BAND GHz to 3.8 — 8.5. Set PERSIST control fully counterclockwise.Set sweep oscillator mode switch to manual and set controls to cover entire FREQUENCY BAND selected (refer to note in step e). Repeat steps j through l. Frequency response should not exceed ±2.2 dB.

o. Set spectrum analyzer INPUT ATTEN control to 10 dB and set REF LEVEL control to 0 dBm. Press ERASE pushbutton. Read greatest positive and negative deviations from center horizontal graticule line. Frequency response should not exceed ± 2.2 dB.

p. Set spectrum analyzer FREQUENCY BAND GHz to 5.8 — 12.9. Set PERSIST control fully counterclockwise. Set sweep oscillator mode switch to manual sweep and set controls to cover entire FREQUENCY BAND selected (refer to note in step e). Repeat steps j through l.Frequency response should not exceed ± 2.5 dB. Repeat step m. Frequency response should not exceed ± 2.5 dB.

q. Set spectrum analyzer FREQUENCY BAND GHz to 8.5 — 18. Set PERSIST control fully counterclockwise. Set sweep oscillator mode switch to manual sweep and set controls to cover entire FREQUENCY BAND selected (refer to note in step e). Repeat steps j through l. Frequency response should not exceed ± 3.0 dB. Repeat step o.Frequency response should not exceed ± 3.0 dB.

Frequency Response, 10.5 to 22 GHz Band

r. Set spectrum analyzer FREQUENCY BAND GHz to 10.5 — 22. Set PERSIST control fully counterclockwise. Set BASELINE CLIPPER fully counterclockwise. Set sweep oscillator mode switch to manual and set controls to cover 10.5 to 18 GHz. Repeat step j.

s. Disconnect power splitter from spectrum analyzer input and measure output at power splitter with power meter. Set sweep oscillator to 18 GHz (manual sweep control fully clockwise) and adjust RF plug-in power level control for a power meter indication of −8 dBm. Reconnect power splitter to spectrum analyzer input.

Scans by ARTEK MEDIA =>

PERFORMANCE TESTS

4-20. FREQUENCY RESPONSE TEST (Cont'd)

t. Set spectrum analyzer PERSIST control fully clockwise. Set sweep oscillator mode switch to automatic sweep and press spectrum analyzer ERASE pushbutton. STORE display after one full plot as shown in Figure 4-18. Record the greatest positive and negative deviations from center horizontal graticule line.

_____ Pos. Deviation

_____ Neg. Deviation

u. Connect equipment as shown in Configuration B of Figure 4-16 with power meter connected to measure output of power splitter. Set sweep oscillator for CW output at 18 GHz. Set line switch to standby and zero the power meter. Turn RF on and set output of sweep oscillator to −8 dBm. Slowly tune the CW source from 18 GHz to 22 GHz and note all of the peak deviations (positive and negative) from −8 dBm reference, and frequencies at which they occur. Record frequencies and peak deviations in Table 4-12. (See example.)

Table 4-12. Correcting for Frequency Response of Signal Source

Frequency (GHz)	Peak Deviation (dB)	CRT Horizontal Displacement (div)	Actual Deviation (dB)	Corrected Deviation (dB)
_____	_____	_____	_____	_____
_____	_____	_____	_____	_____
_____	_____	_____	_____	_____
_____	_____	_____	_____	_____
_____	_____	_____	_____	_____
_____	_____	_____	_____	_____
_____	_____	_____	_____	_____
_____	_____	_____	_____	_____

Example:

Frequency (GHz)	Peak Deviation (dB)	CRT Horizontal Displacement (div)	Actual Deviation (dB)	Corrected Deviation (dB)
18.6	− 1.0	7	− 1.0	0
19.6	− 0.5	7.8	− 1.0	− 0.5
20.1	+ 1.0	8.3	0	− 1.0
20.6	− 1.5	8.7	− 2.0	− 0.5
21.2	+ 0.5	9.2	+ 1.5	+ 1.0
21.8	− 1.0	9.7	− 0.4	+ 0.6

Scans by ARTEK MEDIA =>

PERFORMANCE TESTS

4-20. FREQUENCY RESPONSE TEST (Cont'd)

v. Disconnect thermistor mount from power splitter and connect measured port of power splitter to spectrum analyzer INPUT 50Ω.

w. Set AMPLITUDE SCALE to 10 dB (LOG/DIV). Set TUNING control to each frequency recorded in Table 4-12 and record CRT Horizontal Displacement of marker (number of divisions from far left graticule line) for each setting. (See example.)

x. Set AMPLITUDE SCALE to 2 dB (LOG/DIV). Set TUNING control for any frequency less than 18 GHz. Set sweep oscillator to manually triggered sweep function and adjust band edges to cover 18 GHz to 22 GHz. Set sweep time for slowest sweep (100 seconds).

y. Press spectrum analyzer ERASE pushbutton and set PERSIST control fully clockwise. Trigger the sweep oscillator and slowly adjust sweep time vernier for display similar to that of Figure 4-19. STORE display and read greatest positive and negative deviations from center horizontal graticule line.

——— Pos. Deviation

——— Neg. Deviation

z. Read deviation from horizontal graticule line at each CRT Horizontal Displacement and record Actual Deviations in Table 4-12. Algebraically subtract Peak Deviation from CRT Actual Deviation for each setting in Table 4-12. Record results in Corrected Deviation column. (See example.) Including results from steps t and y and Corrected Deviation from Table 4-12, record the greatest positive and negative deviations. Frequency response (deviation from center horizontal graticule line) should not exceed ± 4.5 dB.

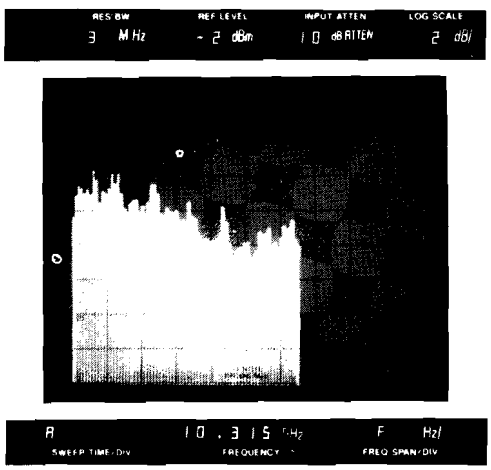

Figure 4-18. Typical Frequency Response, 10.5 to 18 GHz

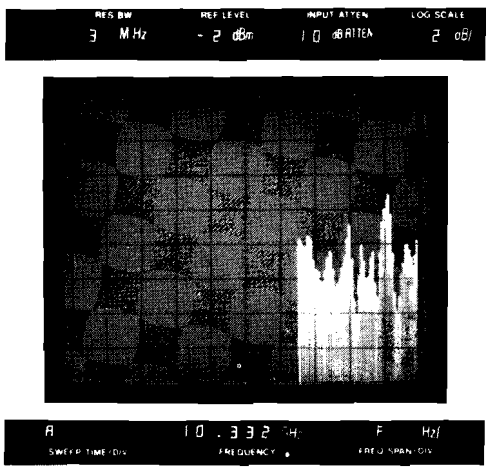

Figure 4-19. Typical Frequency Response, 18 to 22 GHz.

Scans by ARTEK MEDIA =>

PERFORMANCE TESTS

4-21. AMPLITUDE ACCURACY SWITCHING BETWEEN BANDWIDTHS TEST

SPECIFICATION:

Switching between bandwidths: 3 MHz to 300 kHz, ±0.5 dB; 3 MHz to 1 kHz, ± 1.0 dB (100 kHz BW limited to 90% relative humidity).

DESCRIPTION:

The spectrum analyzer 100 MHz CAL OUTPUT signal is applied to the INPUT 50Ω and displayed on the CRT. The peak of the displayed 100 MHz signal is centered on the CRT and adjusted for a vertical deflection of seven divisions. The amplitude variation of the 100 MHz signal is measured for each RESOLUTION BW control setting. The overall variation between RESOLUTION BW settings of 3 MHz to 300 kHz should not exceed 1 dB (± 0.5 dB). The overall variation between RESOLUTION BW settings of 3 MHz to 1 kHz should not exceed 2 dB (±1.0 dB).

PROCEDURE:

a. Set spectrum analyzer controls as follows:

Set all Normal Settings (controls marked with green)

FREQUENCY BAND GHz	.01 — 1.8
INPUT ATTEN	10 dB
REF LEVEL	0 dBm
REF LEVEL FINE	−8
RESOLUTION BW	3 MHz, Uncoupled
FREQUENCY SPAN/DIV	1 MHz
TUNING	0.100 GHz

b. Connect spectrum analyzer CAL OUTPUT signal to INPUT 50Ω.

c. Set AMPLITUDE SCALE to 1 dB (LOG/DIV) and center signal on CRT.

d. Adjust REF LEVEL FINE control to position peak of 100 MHz signal at seventh division (from bottom graticule line).

e. Change the RESOLUTION BW and FREQUENCY SPAN/DIV controls in accordance with Table 4-13. Record the change in amplitude for each RESOLUTION BW setting. Changes in amplitude above reference level set in step d are positive (+). Changes below reference level are negative (−).

f. To find the overall variation in Table 4-13, algebraically subtract the greatest negative change in amplitude from the greatest positive change in amplitude. If all changes in amplitude are of the same sign, the overall variation is the largest positive or largest negative change in amplitude. The overall variation between 3 MHz and 300 kHz RESOLUTION BW settings should be ≤1.0 dB (±0.5 dB). The overall variation between 3 MHz and 1 kHz RESOLUTION BW settings should be ≤2.0 dB (±1.0 dB).

Scans by ARTEK MEDIA =>

PERFORMANCE TESTS

4-21. AMPLITUDE ACCURACY SWITCHING BETWEEN BANDWIDTHS TEST (Cont'd)

Table 4-13. Amplitude Accuracy Switching Between Bandwidths

RESOLUTION BW Setting	FREQUENCY SPAN/DIV Setting	Change in Amplitude (dB)	Overall Variation Between 3 MHz and 300 kHz RESOLUTION BW Settings	Overall Variation Between 3 MHz and 1 kHz RESOLUTION BW Settings
3 MHz	1 MHz	0 (Ref.)		
1 MHz	.2 MHz	_____	_____	_____
300 kHz	50 kHz	_____		
100 kHz	20 kHz	_____		
30 kHz	5 kHz	_____		
10 kHz	2 kHz	_____		
3 kHz	2 kHz	_____		
1 kHz	1 kHz	_____		

4-22. DISPLAY ACCURACY TEST

SPECIFICATION:

Display accuracy:
Log: $< \pm 0.1$ dB/dB but not more than ± 1.5 dB over full 70 dB display range.
Linear: $< \pm 0.1$ division over full 8 division deflection.

DESCRIPTION:

The display accuracy is tested by connecting a DVM to the rear-panel VERTICAL OUTPUT connector of the spectrum analyzer. ZERO SPAN mode is selected so the signal appears as a straight horizontal line on the CRT display. The DVM is used to provide good resolution for this measurement.

Scans by ARTEK MEDIA =>

PERFORMANCE TESTS

4-22. DISPLAY ACCURACY TEST (Cont'd)

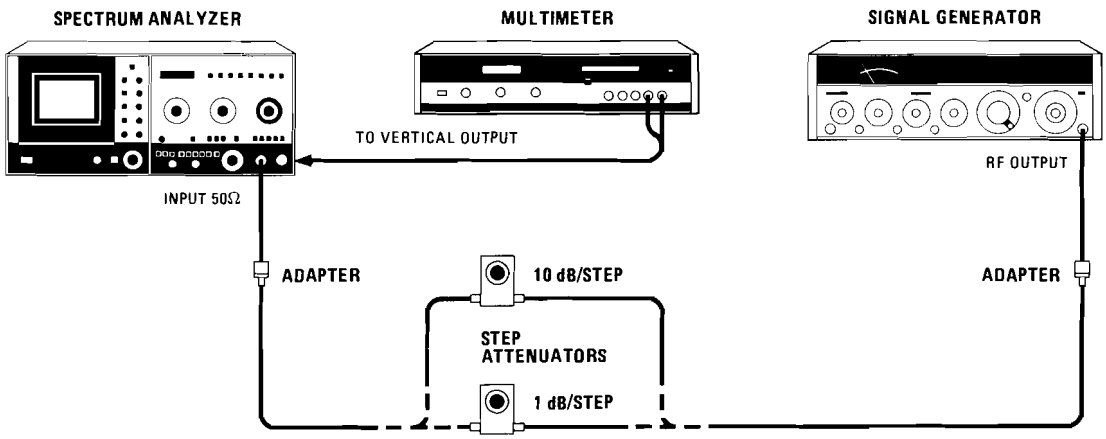

Figure 4-20. Display Accuracy Test Setup

EQUIPMENT:

Signal Generator	HP 8640B
Multimeter (DVM)	HP 3490A
Step Attenuator (10 dB/Step)	HP 355D
Step Attenuator (1 dB/Step)	HP 355C
Adapter, Type N Male to BNC Female (2 required)	HP 1250-0780

PROCEDURE:

a. Set spectrum analyer controls as follows:

Set all Normal Settings (controls marked with green)

FREQUENCY BAND GHz	.01 — 1.8
INPUT ATTEN	10 dB
REF LEVEL	0 dBm
REF LEVEL FINE	0
RESOLUTION BW	Coupled (pushed in)
FREQUENCY SPAN/DIV	2 MHz
TUNING	0.030 GHz

Log Display Accuracy

b. Set signal generator for an unmodulated 30 MHz output at approximately 0 dBm.

c. Connect equipment as shown in Figure 4-20 using 10 dB/step attenuator. Set step attenuator to 0 dB.

d. Adjust spectrum analyzer TUNING control to center signal on CRT. Set FREQUENCY SPAN MODE to ZERO SPAN. Adjust TUNING control to peak signal on CRT and DVM.

e. Set spectrum analyzer REF LEVEL FINE for a DVM indication of +800 mV ± 0.5 mV. The trace should be approximately at the top graticule line.

Scans by ARTEK MEDIA =>

PERFORMANCE TESTS

4-22. DISPLAY ACCURACY TEST (Cont'd)

f. Increase the attenuation of the step attenuator and record the DVM reading for each step (up to 70 dB) in Table 4-14.

Table 4-14. Log Display Accuracy

Attenuator Setting (dB)	DVM Reading (mV)	Theoretical Reading (mV)	Theoretical Reading Subtracted from DVM Reading (mV)	Difference Between Adjacent Readings (mV)
0	+800 (Ref.)	+800	0	
10	_____	+700	_____	_____
20	_____	+600	_____	_____
30	_____	+500	_____	_____
40	_____	+400	_____	_____
50	_____	+300	_____	_____
60	_____	+200	_____	_____
70	_____	+100	_____	_____

g. Having recorded the DVM readings for all of the attenuator settings from 0 to 70 dB, subtract the theoretical reading from the actual DVM reading in each case and record results in Table 4-14.

h. Subtract each converted reading (theoretical reading subtracted from DVM reading) from the previous converted reading. This subtraction must be performed algebraically. Record results in Table 4-14 (see Example 1).

Example 1

Attenuator Setting (dB)	DVM Reading (mV)	Theoretical Reading (mV)	Theoretical Reading Subtracted From DVM Reading (mV)	Difference Between Adjacent Readings (mV)
0	+800	+800	0	
10	+703	+700	+3	−3
20	+594	+600	−6	+9
30	+492	+500	−8	+2
40	+401	+400	+1	−9

Scans by ARTEK MEDIA =>

PERFORMANCE TESTS

4-22. DISPLAY ACCURACY TEST (Cont'd)

i. The difference between adjacent readings (Table 4-14) should not exceed ± 10 mV (± 0.1 dB/dB).

j. Note the highest positive and negative value recorded under "Theoretical Reading Subtracted from DVM Reading." Add their absolute values (disregarding their signs). If all of the signs are negative or all of the signs are positive, subtract the lowest absolute value from the highest absolute value. (See Exmple 2). The sum or difference of the absolute values should not exceed 30 mV (± 1.5 dB).

Example 2

Observing the table in Example 1, note that −8 mV is the highest negative value and +3mV is the highest positive value. Their absolute values being 8 mV and 3 mV: 8 plus 3 = 11 mV (1.1 dB).

Linear Display Accuracy

k. Replace 10 dB/step attenuator with 1 dB/step attenuator. Set step attenuator to 0 dB.

l. Set spectrum analyzer AMPLITUDE SCALE to LIN and adjust REF LEVEL FINE control for a DVM indication of +800 mV ± 0.5 mV.

m. Set step attenuator to 6 dB. DVM should indicate +400 mV ± 10 mV (±0.1 division).

n. Set step attenuator to 12 dB. DVM should indicate +200 mV ± 10 mV (± 0.1 division).

4-23. SWEEP TIME ACCURACY TEST

SPECIFICATION:

Calibrated sweep times: 21 internal sweep times from 2 μsec/Div to 10 sec/Div in 1, 2, 5, 10 sequence. Sweep time accuracy ± 10% except for 2, 5, and 10 sec/Div which are ±20%.

DESCRIPTION:

A time mark generator is used to modulate a 500 MHz signal which is applied to the INPUT 50Ω of the spectrum analyzer. ZERO SPAN is used to demodulate the signal, displaying markers at very accurate time intervals. The sweep time accuracy of the spectrum analyzer is checked by observing the marker displayed near the center graticule line. This marker (peak) must be within ±0.5 division (± 10%) of center graticule line for sweep times up to and including 1 second per division, and ± 1.0 division (±20%) for 2, 5, and 10 second per division sweeps.

Scans by ARTEK MEDIA =>

PERFORMANCE TESTS

4-23. SWEEP TIME ACCURACY TEST (Cont'd)

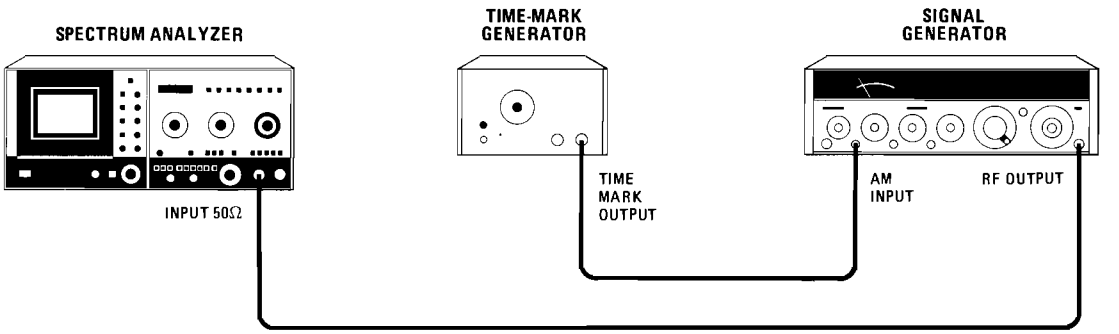

Figure 4-21. Sweep Time Accuracy Test Setup

EQUIPMENT:

Signal Generator ..... HP 8640B
Time Mark Generator ..... HP 226A

PROCEDURE:

a. Set spectrum analyzer controls as follows:

Set all Normal Settings (controls marked with green)
FREQUENCY BAND GHz..... .01 — 1.8
INPUT ATTEN ..... 10 dB
REF LEVEL..... +10 dBm
REF LEVEL FINE..... 0
RESOLUTION BW ..... 3 MHz, Uncoupled
FREQUENCY SPAN/DIV ..... 10 MHz
TUNING..... 0.500 GHz

b. Set signal generator for an unmodulated 500 MHz output at approximately 0 dBm.

c. Connect equipment as shown in Figure 4-21 leaving 8640B AM switch in OFF position.

d. Adjust spectrum analyzer TUNING control to center signal on CRT. Set FREQUENCY SPAN MODE to ZERO SPAN and set SWEEP TRIGGER to VIDEO.

e. Set 8640B AM switch to PULSE. Set time mark generator to 5 μsec and spectrum analyzer SWEEP TIME/DIV switch to 2 μsec.

f. Adjust TRIGGER LEVEL so the first peak is at the graticule reference line (see Figure 4-22). The third peak should be at the center graticule line ± 0.5 division (± 10%).

g. Set SWEEP TIME /DIV to 5 μsec and adjust TRIGGER LEVEL so first peak is at graticule reference line. The sixth peak should be at the center grticule line ± 0.5 division (± 10%).

Scans by ARTEK MEDIA =>

PERFORMANCE TESTS

4-23. SWEEP TIME ACCURACY TEST (Cont'd)

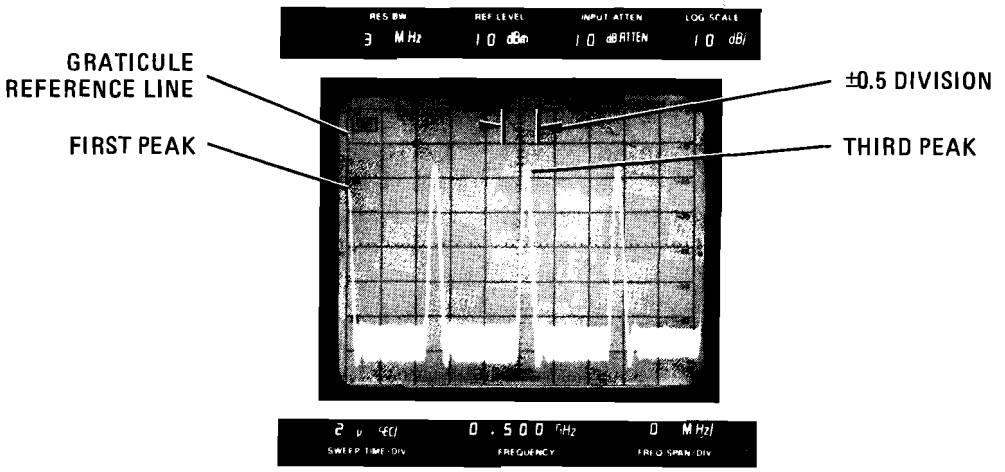

Figure 4-22. Sweep Time Accuracy, 2μ SEC/DIV

h. Continue increasing SWEEP TIME/DIV and setting time mark generator to match the sweep times of the spectrum analyzer. Adjust TRIGGER LEVEL as necessary to place first peak at graticule reference line. The sixth peak should be at center graticule line ±0.5 division for each setting up to and including 1 SEC per division.

NOTE

When 1 mSEC SWEEP TIME/DIV setting is reached, set BASELINE CLIPPER control clockwise until baseline completely disappears. Set PERSIST control fully clockwise and adjust INTENSITY control as necessary to reduce blooming. Continue checking SWEEP TIME/DIV up to and including 1 SEC per division. Press ERASE pushbutton before checking position of sixth peak for each setting. (See Figure 8-23.)

i. Continue increasing SWEEP TIME/DIV and time mark generator settings to measure sweep time accuracy at 2, 5, and 10 second per division sweeps. START/RESET pushbutton can be used to reset start of trace for each setting. The sixth peak should be at center graticule line ±1.0 division (±20%).

Scans by ARTEK MEDIA =>

PERFORMANCE TESTS

4-23. SWEEP TIME ACCURACY TEST (Cont'd)

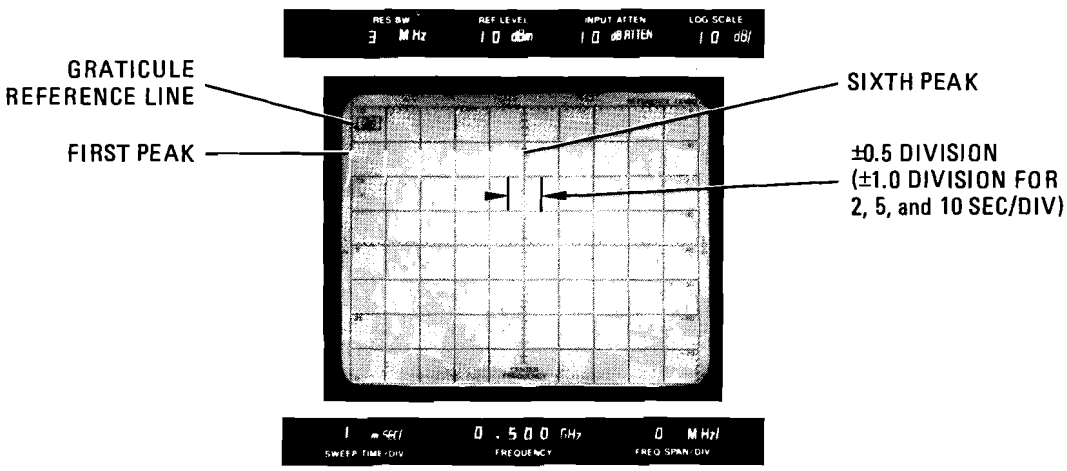

Figure 4-23. Sweep Time Accuracy, 1 mSEC/DIV

Scans by ARTEK MEDIA =>

SECTION V
ADJUSTMENTS

5-1. INTRODUCTION

5-2. This section describes adjustments required to return the Spectrum Analyzer to peak operating condition when repairs are required. Table 5-1 lists all of the adjustments by adjustment name, reference designator, adjustment paragraph, service sheet number, and description. Included in this section are test setups, and check and adjustment procedures.

5-3. Data taken during adjustments should be recorded in the spaces provided. Comparison of initial data with data taken during periodic adjustments assists in preventive maintenance and troubleshooting.

WARNING

With the covers removed, terminals are exposed that have voltages capable of causing death. The adjustments in this section should be performed only by a skilled person who knows the hazard involved.

NOTE

Before performing any adjustments, allow 1 hour warmup time for the instrument.

5-4. EQUIPMENT REQUIRED

5-5. Table 1-3 contains a tabular list of test equipment and test accessories required in the adjustment procedures. In addition, the table contains the required minimum specifications and a suggested manufacturers model number.

5-6. Blade Tuning Tools

5-7. For adjustments requiring a non-metallic tuning tool, use fiber tuning tool, HP Part Number 8710-0033. In situations not requiring non-metallic tuning tools, an ordinary small screwdriver or other suitable tool is sufficient. No matter what tool is used, never try to force any adjustment control in the analyzer. This is especially critical when tuning variable slug-tuned inductors, and variable capacitors.

5-8. FACTORY SELECTED COMPONENTS

5-9. Table 5-2 contains a list of factory selected components by reference designation, schematic diagram location, and basis of selection. Factory selected components are designated by an asterisk (*) on the schematic diagrams in Section VIII.

5-10. RELATED ADJUSTMENTS

5-11. Interactive control adjustments are noted in the procedures. Table 5-3 indicates by paragraph numbers the adjustments that must be performed if an assembly has been replaced or repaired, or if an adjustment has been made on an assembly.

Scans by ARTEK MEDIA =>

Table 5-1. Adjustable Components (1 of 7)

Reference Designator	Adjustment Name	Adjustment Paragraph	Service Sheet	Performance Tests	Description
A3R1	ASTIG	5-13	27		Adjusts astigmatism of CRT display.
A3R2	TRACE ALIGN	5-14	27		Aligns X and Y axes with graticule display.
A4C8	HF ADJUST	5-15	30		Adjusts risetime of Z-axis gate.
A4R18	HF GAIN	5-15	30		Adjusts gain of Z-axis driver.
A5R27	GAIN	5-17	28		Adjusts gain of Y-axis deflection ampl.
A6R27	GAIN	5-17	29		Adjusts gain of X-axis deflection ampl.
A7R17	WRITE DEPTH	5-16	31		Adjusts storage mesh potential
A7R59	PAT	5-14	31		Corrects for curvature in CRT trace.
A7R63	FLG	5-16	31		Adjusts Flood Gun grid voltage.
A7R64	COLLIMATOR	5-16	31		Adjusts dispersion of flood gun beam.
A7R70	INT	5-16	31		Adjusted to keep intensity constant with changes in persistence.
A7R71	ORTHOG	5-14	31		Adjusts for perpendicular X and Y axes.
A8R13	FOCUS LIMIT	5-13	32		Sets limit of front panel FOCUS control.
A9R2	HV	5-13	32		Adjusts High Voltage Power Supply.
A9R4	INT	5-13	32		Sets maximum CRT trace intensity.
A12R18	REF ADJ	5-22	17	4-8	Adjusts negative reference voltage used in A/D conversion.
A12R37	INPUT BAL	5-22	17	4-8	Balances input amplifier used for A/D conversion
A12R53	HYST	5-22	17	4-8	Compensates for hysterisis in A/D conversion.
A12R56	ZERO ADJUST	5-22	17	4-8	Calibrates CENTER FREQUENCY readout at 0 GHz.
A14R57	TICK SWP	5-24	15	4-9	Adjusts sweep voltage to YTO tickler coil.
A14R68	FET OFF	5-24	15	4-9	Nulls offset in VCXO sweep voltage.

Scans by ARTEK MEDIA =>

Table 5-1. Adjustable Components (2 of 7)

Reference Designator	Adjustment Name	Adjustment Paragraph	Service Sheet	Performance Test	Description
A14R71	VCXO SWP	5-24	15	4-9	Adjusts sweep voltage to VCXO.
A15R53	MAIN SWP OFFSET	5-24	11	4-9	Compensates for offset between wide and narrow frequency span widths.
A16R9	+10VTV	5-21	10	4-23	Adjusts +10 volt temperature variable supply.
A16R15	1MS	5-21	10	4-23	Calibrates 1 ms per division sweep time.
A16R19	2MS	5-21	10	4-23	Calibrates 2 ms per division sweep time.
A16R25	AST LIMIT	5-21	10	4-23	Adjusts AUTO sweep time.
A16R74	SWP STOP	5-21	10	4-23	Sets maximum positive sweep ramp voltage.
A17R11	+10VR	5-22	12	4-8	Adjusts +10 volt reference supply.
A17R43	N2	5-26	12	4-20	Adjusts YTF sweep offset on 3.8 – 8.5 GHz FREQUENCY BAND.
A17R50	N3	5-26	12	4-20	Adjusts YTF sweep offset on 5.8 – 12.9 GHz FREQUENCY BAND.
A17R57	N4	5-26	12	4-20	Adjusts YTF sweep offset on 8.5 – 18 GHz FREQUENCY BAND.
A17R64	N5	5-26	12	4-20	Adjusts YTF sweep offset on 10.5 – 22 GHz FREQUENCY BAND.
A17R125	CF OFF	5-22	12	4-8	Nulls offset in center frequency analog voltage.
A19R5	YTO OFFSET	5-22	14	4-8	Adjusts YTO lower frequency limit, 2.05 GHz
A19R8	YTO GAIN	5-22	14	4-8	Adjusts YTO upper frequency limit, 4.4 GHz.
A19R14	YTF OFFSET	5-26	14	4-20	Adjusts YTF lower frequency tracking.
A19R17	YTF GAIN	5-26	14	4-20	Adjusts YTF upper frequency tracking.
A19R39	YTF LIN 13	5-26	14	4-20	Adjusts YTF tracking at 13 GHz.

Scans by ARTEK MEDIA =>

Table 5-1. Adjustable Components (3 of 7)

Reference Designator	Adjustment Name	Adjustment Paragraph	Service Sheet	Performance Test	Description
A19R42	YTF LIN 16	5-26	14	4-20	Adjusts YTF tracking at 16 GHz.
A19R45	YTF LIN 18	5-26	14	4-20	Adjusts YTF tracking at 18 GHz.
A19R48	YTF LIN 20	5-26	14	4-20	Adjusts YTF tracking at 20 GHz.
A19R51	YTF LIN 22	5-26	14	4-20	Adjusts YTF tracking at 22 GHz.
A20R1	V3	5-25, 5-27	19	4-20	Adjusts mixer diode bias, 3.8 – 8.5 GHz
A20R2	V5	5-25, 5,27	19	4-20	Adjusts mixer diode bias, 8.5 – 18 GHz.
A20R3	V4	5-25, 5-27	19	4-20	Adjusts mixer diode bias, 5.8 – 12.9 GHz.
A20R5	R5	5-27	19	4-20	Adjusts mixer diode bias, 8.5 – 18 GHz.
A20R6	V6	5-25, 5-27	19	4-20	Adjusts mixer diode bias, 10.5 – 22 GHz.
A20R7	B1A	5-27	19	4-20	Frequency response compensation, .01 – 1.8 GHz.
A20R8	B1B	5-27	19	4-20	Frequency response compensation, .01 – 1.8 GHz.
A20R9	B2A	5-27	19	4-20	Frequency response compensation, 1.7 – 4.1 GHz.
A20R10	B2B	5-27	19	4-20	Frequency response compensation, 1.7 – 4.1 GHz.
A20R11	B2C	5-27	19	4-20	Frequency response compensation, 1.7 – 4.1 GHz.
A20R12	B3A	5-27	19	4-20	Frequency response compensation, 3.8 – 8.5 GHz.
A20R13	B3B	5-27	19	4-20	Frequency response compensation, 3.8 – 8.5 GHz.
A20R14	B4A	5-27	19	4-20	Frequency response compensation, 5.8 – 12.9 GHz.
A20R15	B4B	5-27	19	4-20	Frequency response compensation, 5.8 – 12.9 GHz.

Scans by ARTEK MEDIA =>

Table 5-1. Adjustable Components (4 of 7)

Reference Designator	Adjustment Name	Adjustment Paragraph	Service Sheet	Performance Test	Description
A20R16	B5A	5-27	19	4-20	Frequency response compensation, 8.5 – 18 GHz.
A20R17	B5B	5-27	19	4-20	Frequency response compensation, 8.5 – 18 GHz.
A20R18	B5C	5-27	19	4-20	Frequency response compensation, 8.5 – 18 GHz.
A20R19	B6A	5-27	19	4-20	Frequency response compensation, 10.5 – 22 GHz.
A20R20	B6D	5-27	19	4-20	Frequency response compensation, 10.5 – 22 GHz.
A20R21	B6C	5-27	19	4-20	Frequency response compensation, 10.5 – 22 GHz.
A20R22	B6B	5-27	19	4-20	Frequency response compensation, 10.5 – 22 GHz.
A20R100	B4C	5-27	19	4-20	Frequency response compensation, 5.8 – 12.9 GHz.
A21R52	1 kHz	5-19	25	4-10	Adjusts IF bandwidth for RESOLUTION BW of 1 kHz.
A21R55	3 kHz	5-19	25	4-10	Adjusts IF bandwidth for RESOLUTION BW of 3 kHz.
A21R58	10 kHz	5-19	25	4-10	Adjusts IF bandwidth for RESOLUTION BW of 10 kHz.
A21R71	300 kHz	5-19	25	4-10	Adjusts IF bandwidth for RESOLUTION BW of 300 kHz.
A21R74	1 MHz	5-19	25	4-10	Adjusts IF bandwidth for RESOLUTION BW of 1 MHz.
A21R77	3 MHz	5-19	25	4-10	Adjusts IF bandwidth for RESOLUTION BW of 3 MHz.
A21R92	OFFSET	5-18	25	4-16	Nulls offset between LIN and 1 dB AMPLITUDE SCALE.
A22R1	LOG GAIN	5-18	24	4-16	Adjusts dc offset circuitry at output of Log amplifier for 10 dB steps in Log mode.

Scans by ARTEK MEDIA =>

Table 5-1. Adjustable Components (5 of 7)

Reference Designator	Adjustment Name	Adjustment Paragraph	Service Sheet	Performance Test	Description
A22R2	LOG LIN	5-18	24	4-16	Adjusts for Log to linear full screen display translations.
A22R3	LIN GAIN	5-18	24	4-16	Adjusts Log Amplifier for 10 dB gain steps when in Linear Mode. Affects adjustment of LOG/LIN.
A23C15	SYM	5-19	23	4-10	Adjusts symmetry of first pole of crystal bandwidth filter.
A23C23	LC CTR	5-19	23	4-10	Adjusts centering of first pole of LC bandwidth filter.
A23C25	CTR	5-19	23	4-10	Adjusts centering and amplitude of first pole of crystal bandwidth filter.
A23C38	SYM	5-19	23	4-10	Adjusts symmetry of second pole of crystal bandwidth filter.
A23C45	LC CTR	5-19	23	4-10	Adjusts centering of second pole of LC bandwidth filter.
A23C54	CTR	5-19	23	4-10	Adjusts centering and amplitude of second pole of crystal bandwidth filter.
A23C73	C73	5-19	23	4-10	Coarse centering adjustment for centering of first pole of LC bandwidth filter.
A23C74	C74	5-19	23	4-10	Coarse centering adjustment for centering of second pole of LC bandwidth filter.
A23R26	LC	5-19	23	4-10	Adjusts feedback in LC circuit of bandpass filter.
A23R31	XTAL	5-19	23	4-10	Adjusts feedback in crystal circuit of bandpass filter.
A24R1	40 dB	5-20	22	4-16	Adjusts 40 dB step gain.
A24R2	20 dB	5-20	22	4-16	Adjusts 20 dB step gain.
A24R3	10 dB	5-20	22	4-16	Adjusts 10 dB step gain.
A24R4	RF GAIN	5-20	22	4-16	Adjusts overall gain of Step Gain Assembly.

Scans by ARTEK MEDIA =>

Table 5-1. Adjustable Components (6 of 7)

Reference Designator	Adjustment Name	Adjustment Paragraph	Service Sheet	Performance Test	Description
A24R5	0 dB	5-20	22	4-16	Adjusts to calibrate 0 dB position of REF LEVEL FINE control.
A24R6	−12 dB	5-20	22	4-16	Adjusts to calibrate −12 dB position of REF LEVEL FINE control.
A27C15	SYM	5-19	21	4-10	Adjusts symmetry of first pole of crystal bandwidth filter.
A27C23	LC CTR	5-19	21	4-10	Adjusts centering of first pole of LC bandwidth filter.
A27C25	CTR	5-19	21	4-10	Adjusts centering and amplitude of first pole of crystal bandwidth filter.
A27C38	SYM	5-19	21	4-10	Adjusts symmetry of second pole of crystal bandwidth filter.
A27C45	LC CTR	5-19	21	4-10	Adjusts centering of second pole of LC bandwidth filter.
A27C54	CTR	5-19	21	4-10	Adjusts centering and amplitude of second pole of crystal bandwidth filter.
A27 C73	C73	5-19	21	4-10	Coarse centering adjustment for centering of first pole of LC bandwidth filter.
A27C74	C74	5-19	21	4-10	Coarse centering adjustment for centering of second pole of LC bandwidth filter.
A27R26	LC	5-19	21	4-10	Adjusts feedback in LC circuit of bandpass filter.
A27R31	XTAL	5-19	21	4-10	Adjusts feedback in crystal circuit of bandpass filter.
A28R7	PIN RES	5-27	20	4-20	Compensates for variations in PIN diode resistance.
A35C1	C1	5-23	7	4-8	Adjust bandpass of 2050 MHz bandpass filter.
A35C2	C2	5-23	7	4-8	Adjust bandpass of 2050 MHz bandpass filter.

Scans by ARTEK MEDIA =>

Table 5-1. Adjustable Components (7 of 7)

Reference Designator	Adjustment Name	Adjustment Paragraph	Service Sheet	Performance Test	Description
A35C3	C3	5-23	7	4-8	Adjust bandpass of 2050 MHz bandpass filter.
A35C4	2ND LO FREQUENCY	5-23	7	4-8	Adjusts second L.O. frequency to 1728.60 MHz.
A35L1	2ND MIXER MATCH	5-23	7	4-8	Adjusts for optimum match between second converter output and second IF input.
A36A2C2	1.3 MHz NULL	5-24	16	4-9	Adjusts to minimize 1.3 MHz feedback in VCXO.
A36A2C3	LINEARITY	5-24	16	4-9	Adjusts for linear tuning stabilizer error output signal.
A36A2C16	1 MHz PEAK	5-24	16	4-9	Adjusts for linear tuning stabilizer error output signal.
A37C1	321.4 MHz BP ADJUST	5-23	8	4-8	Adjust bandpass of 321.4 MHz bandpass filter.
A37C2	321.4 MHz BP ADJUST	5-23	8	4-8	Adjust bandpass of 321.4 MHz bandpass filter.
A37C3	321.4 MHz BP ADJUST	5-23	8	4-8	Adjust bandpass of 321.4 MHz bandpass filter.
A37C4	321.4 MHz BP ADJUST	5-23	8	4-8	Adjust bandpass of 321.4 MHz bandpass filter.
A37C5	300 MHz BP ADJUST	5-23	8	4-8	Adjust bandpass of 300 MHz bandpass filter.
A37C6	300 MHz BP ADJUST	5-23	8	4-8	Adjust bandpass of 300 MHz bandpass filter.
A37A3L4	OSC PEAK	5-23	8	4-19	Peaks 100 MHz crystal oscillator.
A37A3R27	CAL OUT LEVEL	5-23	8	4-19	Adjusts 100 MHz CAL OUT to −10 dBm power out.
A39R40	DIG INT	5-22	35		Adjusts intensity of digits on bezel digital readout.
A40A2R17	+15V REF	5-12	36		Adjusts +15 volt power supply.

Scans by ARTEK MEDIA =>

Table 5-2. Factory Selected Components

Reference Designator	Adjustment Paragraph	Service Sheet	Performance Test	Basis of Selection
A20R29	5-27	19	4-20	Selected for best frequency response on high end of 5.8 – 12.9 GHz FREQUENCY BAND.
A23R19	5-19	23	4-10	Selected to give correct IF bandwidth for RESOLUTION BW of 100 kHz.
A23R23	5-19	23	4-10	Selected to give correct IF bandwidth for RESOLUTION BW of 30 kHz.
A23R43	5-19	23	4-10	Selected to give correct IF bandwidth for RESOLUTION BW of 100 kHz.
A23R48	5-19	23	4-10	Selected to give correct IF bandwidth for RESOLUTION BW of 30 kHz.
A27R23	5-19	21	4-10	Selected to give correct IF bandwidth for RESOLUTION BW of 30 kHz.
A27R43	5-19	21	4-10	Selected to give correct IF bandwidth for RESOLUTION BW of 100 kHz.
A27R48	5-19	21	4-10	Selected to give correct IF bandwidth for RESOLUTION BW of 30 kHz.
A28R1	5-28	20	4-16	Selected to provide maximum adjustment range for REF LEVEL CAL.
A28R19	5-27	20	4-20	Selected to provide correct gain compensation of the 5.8 – 12.9 GHz FREQUENCY BAND.
A28R21	5-27	20	4-20	Selected to provide correct gain compensation of the 5.8 – 12.9 GHz FREQUENCY BAND.
A28R23	5-27	20	4-20	Selected to provide correct gain compensation of the 10.5 – 22 GHz FREQUENCY BAND.

Scans by ARTEK MEDIA =>

Table 5-3. Related Adjustments (1 of 2)

Assembly Changed or Repaired		Perform Adjustments on Following Related Assemblies	Paragraph Number
A1	Front Panel Display	A39	5-22
A3	Display Adjust	A3, A7R71	5-13, 5-14
A4	Z-Axis Amplifier	A4	5-15
A5	Y Deflection Amplifier	A5	5-17
A6	X Deflection Amplifier	A6	5-17
A7	Storage Assembly	A7	5-14, 5-16
A8	High Voltage Power Supply	A8, A9	5-13
A9	High Voltage Oscillator	A8, A9	5-13
A12	DVM Analog	A12	5-22
A14	Tuning Stabilizer Control Assembly	A14, A15, A16, A36	5-21, 5-24
A15	Sweep Attenuator	A14, A15, A16	5-21, 5-24
A16	Sweep Generator	A14, A15, A16	5-21, 5-24
A17	Frequency Control Assembly	A12, A17, A19	5-22, 5-26
A19	YIG Driver	A12, A17, A19	5-22, 5-26
A20	Bias Assembly	A17, A19, A20	5-22, 5-25, 5-26, 5-27
A21	Video Assembly	A21, A22, A23, A27	5-18, 5-19
A22	Log Amplifier	A21, A22, A23, A27	5-18, 5-19
A23	Bandwidth Filter No. 2	A21, A22, A23, A27	5-18, 5-19

Scans by ARTEK MEDIA =>

Table 5-3. Related Adjustments (2 of 2)

Assembly Changed or Repaired		Perform Adjustments on Following Related Assemblies	Paragraph Number
A24	Step Gain Amplifier	A24	5-20
A27	Bandwidth Filter No. 1	A21, A22, A23, A27	5-18, 5-19
A28	Variable Gain Assembly	A28R7	5-27
A30	First Mixer	A17, A19, A20	5-22, 5-25, 5-26, 5-27
A31	YTO Assembly	A17, A19	5-22, 5-26, 5-27
A32	YTF Assembly	A17, A19	5-22, 5-26, 5-27
A35	Second Converter	A35, A37	5-23
A36	Tuning Stabilizer	A14, A36	5-21, 5-24
A37	Third Converter	A21, A22, A23, A27, A37	5-18, 5-19, 5-23
A39	Readout Driver	A39	5-22
A40	Power Supply	Perform all adjustments	5-12 thru 5-27

Scans by ARTEK MEDIA =>

ADJUSTMENTS

5-12. LOW VOLTAGE POWER SUPPLY CHECK AND ADJUSTMENT

REFERENCE:

Service Sheet 36

DESCRIPTION:

The +15 volt supply is adjusted for correct output and the remaining low voltage supplies are checked for correct output.

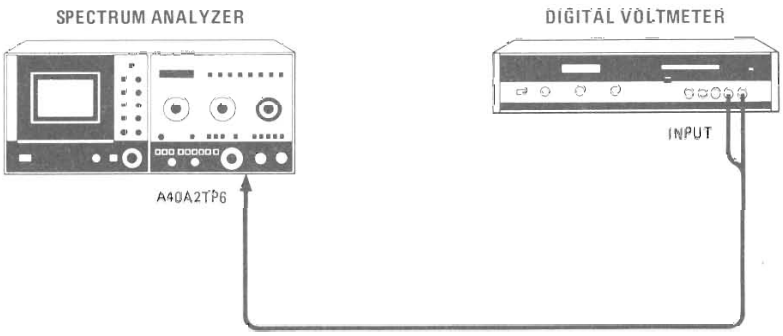

Figure 5-1. Low Voltage Power Supply Check and Adjustment Test Setup

EQUIPMENT:

Digital Voltmeter ..... HP 3490A

BOTTOM VIEW

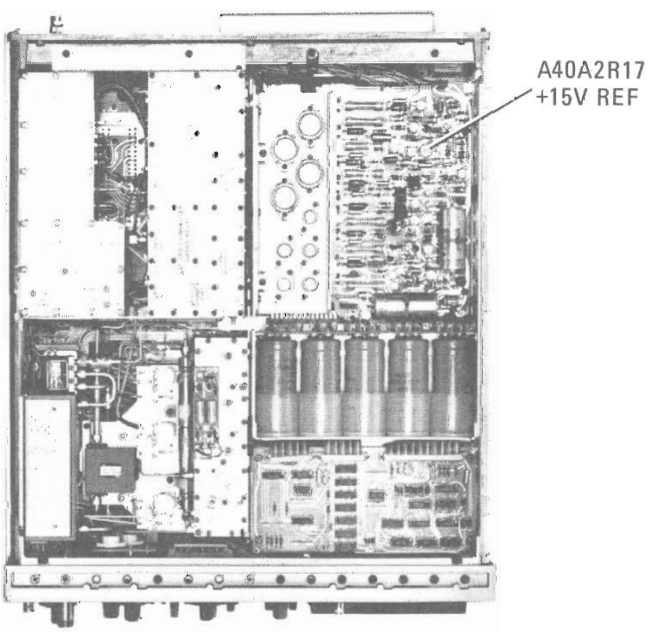

Figure 5-2. A40A2 Adjustment Location

Scans by ARTEK MEDIA =>

ADJUSTMENTS

5-12. LOW VOLTAGE POWER SUPPLY CHECK AND ADJUSTMENT(Cont'd)

PROCEDURE:

a. Set LINE switch OFF, disconnect power cord, and remove 8565A bottom cover to gain access to low voltage power supplies.

b. Reconnect power cord, set LINE switch ON, and connect digital voltmeter to A40A2TP11 +15VR.

NOTE

If + 15V supply is + 15V ± 0.01V, do not make adjustment, as this will affect instrument calibration.

c. Adjust +15V REF A40A2R17 for +15.00 Vdc ±0.005 Vdc (Figure 5-2).

WARNING

The following check probes voltages that, if contacted, may cause personal injury.

d. Check power supply voltages listed in Table 5-4.

Table 5-4. Low Voltage Power Supplies

Test Point	Voltage (Vdc)	Tolerance (Vdc)
TP10	+158	±4.0
TP9	+30	±0.20
TP8	+20	±0.20
TP3	+15	±0.10
TP5	+10	±0 10
TP1	+5.2	±0.05
TP6	−10	±0.10
TP4	−15	±0.15
TP2	−40	±0.4

Scans by ARTEK MEDIA =>

ADJUSTMENTS

5-12. LOW VOLTAGE POWER SUPPLY CHECK AND ADJUSTMENT(Cont'd)

e. Adjustment and checks complete. Set LINE switch OFF, disconnect power cord, and replace 8565A bottom cover.

5-13. HIGH VOLTAGE POWER SUPPLY ADJUSTMENT

REFERENCE:

Service Sheet 32

DESCRIPTION:

A high voltage probe is required to measure high voltage CRT cathode supply. First, the probe accuracy is checked by comparing measurements of the +158V supply with, and without, the probe in the test setup. Any error is then calculated into the test setup for setting high voltage CRT cathode supply. The FOCUS LIMIT adjustment is set for a sharply focused display with front panel FOCUS control set at midrange. The Intensity Limit adjustment is then set to limit the CRT control grid voltage and, in effect, limit the maximum CRT trace intensity.

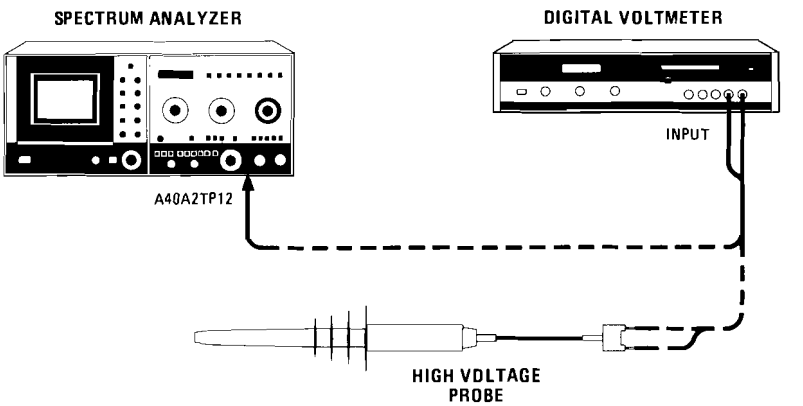

Figure 5-3. High Voltage Power Supply Adjustment Test Setup

EQUIPMENT:

Digital Voltmeter ..... HP 3490A
High Voltage Probe (1000:1 Divider) ..... HP 34111A
Oscilloscope ..... HP 1740A
10:1 Divider Probe ..... HP 10004D

WARNING

To minimize shock hazard use a non-metallic screwdriver for adjustments on A8 HV Power Supply and A9 HV Oscillator.

WARNING

The following procedure probes voltages that, if contacted, may cause personnel injury or death.

Scans by ARTEK MEDIA =>

ADJUSTMENTS

5-13. HIGH VOLTAGE POWER SUPPLY ADJUSTMENT (Cont'd)

NOTE

Adjustment of the High Voltage Power Supply should not be a routine-maintenance procedure. Adjustment should only be done when the HV Power Supply or HV Oscillator is repaired or replaced.

NOTE

If an assembly or an adjustable component is replaced, set all adjustments on the replaced assembly to midrange (except A9R1 INT, which should not be changed) before turning the instrument on. If the CRT is replaced, set front panel INTENSITY control fully counterclockwise before applying power.

TOP VIEW

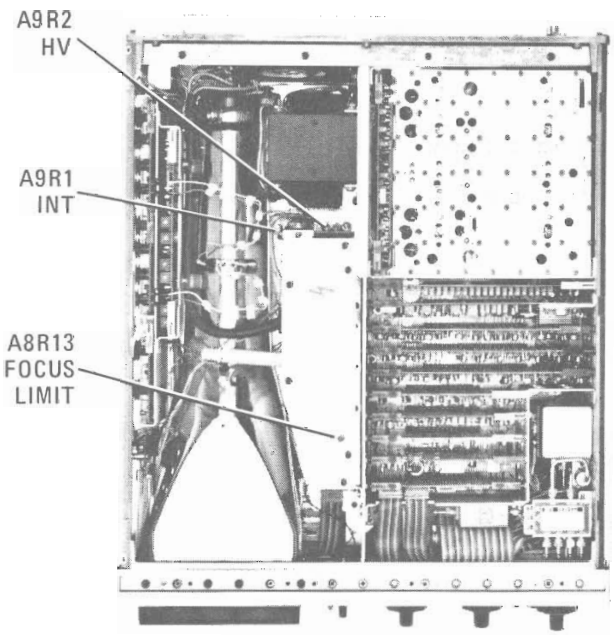

Figure 5-4. High Voltage Power Supply and Oscillator Driver Adjustment Locations

PROCEDURE:

WARNING

After disconnecting AC line power cord, allow a minimum of 30 seconds for High Voltage Power Supply to discharge before removing High Voltage Power Supply protective cover.

a. Set LINE switch OFF, disconnect power cord, and remove 8565A top and bottom covers. Remove High Voltage Power Supply protective cover.

Scans by ARTEK MEDIA =>

ADJUSTMENTS

5-13. HIGH VOLTAGE POWER SUPPLY ADJUSTMENT (Cont'd)

b. Reconnect power cord, set LINE switch ON, and set 8565A controls as follows:

Set all Normal Settings (controls marked with green)
REFERENCE LEVEL ..... 70 dB
AMPLITUDE SCALE ..... LIN
CONVentional ..... Depressed
PERSIST ..... Fully counterclockwise
FOCUS ..... Midrange

High Voltage Power Supply

c. Calibrate High Voltage probe as follows:

1. Measure output of +158V supply at A40A2TP10 and note reading.

+ _____ Vdc

2. Connect 1000:1 divider probe to digital voltmeter and set voltmeter to .1V range.

3. Measure +158V supply through 1000:1 divider probe and note reading.

+ _____ Vdc

4. Divide reading noted in step c-1 into reading noted in step c-3. This gives the calibration factor of the high voltage probe.

d. Set digital voltmeter to 10V range and measure output of high voltage CRT cathode power supply on board assembly A8 HVTP (yellow wire).

e. Adjust A9R2 HV (Figure 5-4) for a reading equal to the calibration factor, calculated in step c-4, times −3000 volts.

Focus Centering

f. Depress both INT and EXT SWEEP SOURCE pushbuttons to produce a dot on the CRT screen.

CAUTION

Leaving a dot on the CRT for prolonged periods at high intensity may damage CRT.

g. Adjust front panel INTENSITY, HORIZ POSN and VERT POSN controls for a spot of normal intensity near center of screen.

h. Adjust A8R13 FOCUS LIMIT (Figure 5-4) and front panel ASTIG (A3R1) for a sharply focused round spot.

i. Depress INT SWEEP SOURCE pushbutton to return 8565A to internal sweep.

Scans by ARTEK MEDIA =>

ADJUSTMENTS

5-13. HIGH VOLTAGE POWER SUPPLY ADJUSTMENT (Cont'd)

Intensity Limit

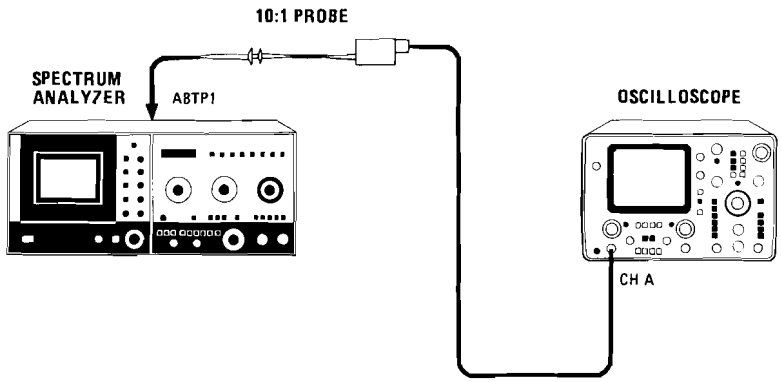

Figure 5-5. Intensity Limit Adjustment Test Setup

j. Connect oscilloscope, through 10:1 divider probe, to A8TP1.

k. Set front panel HORIZ POSN and VERT POSN controls fully counterclockwise; then set front panel INTENSITY control fully clockwise.

l. Adjust A9R1 INT (Intensity Limit) (Figure 5-4) for an 8 volts peak-to-peak signal at A8TP1.

m. Disconnect oscilloscope, set front panel INTENSITY control fully counterclockwise, and set front panel HORIZ POSN and VERT POSN controls to midrange.

WARNING

After disconencting ac line power cord, allow a minimum of 30 seconds for High Voltage Power Supply to discharge before replacing High Voltage Power Supply protective cover.

n. Set LINE switch OFF, disconnect power cord, and wait a minimum of 30 seconds before replacing High Voltage Power Supply protective cover. Replace 8565A top and bottom covers.

5-14. Orthogonality, Trace Alignment and Pattern Adjustment

REFERENCE:

Service Sheet 31

Scans by ARTEK MEDIA =>

ADJUSTMENTS

5-14. ORTHOGONALITY, TRACE ALIGNMENT AND PATTERN ADJUSTMENT (Cont'd)

DESCRIPTION:

The initial test setup is used to generate a horizontal trace without any vertical deflection (A21 Video Assembly output grounded). The trace is then aligned with a horizontal graticule line and any curvature in the trace is adjusted out. The test setup is changed to give a vertically swept trace without any horizontal deflection (EXT SWEEP INPUT grounded). The vertical trace is aligned with a vertical graticule line. These adjustments are repeated until both horizontal and vertical traces align with the respective graticule lines. This results in the horizontal and vertical traces being mutually perpendicular and aligned in the horizontal and vertical axes.

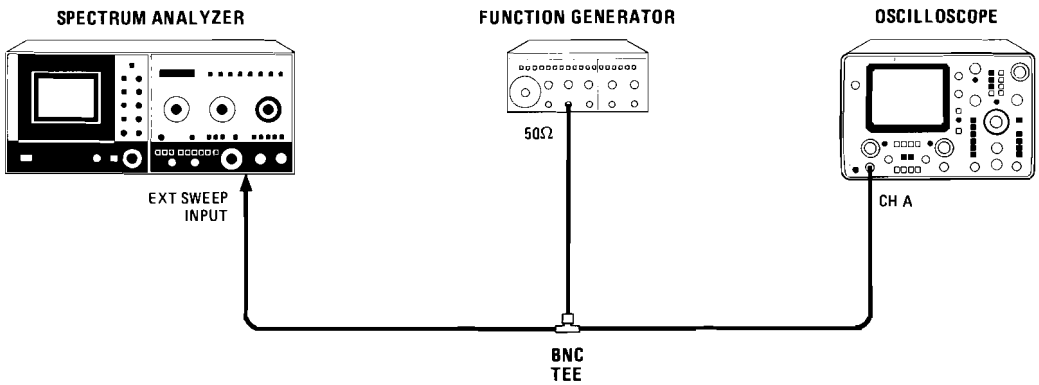

Figure 5-6. Orthogonality, Trace Alignment and Pattern Adjustment Test Setup

EQUIPMENT:

Oscilloscope	HP 1740A
Function Generator	HP 3312A
BNC Tee	1250-0781
Extender Board (2 x 22 pin)	08565-60107
BNC Short	1250-0774

Scans by ARTEK MEDIA =>

ADJUSTMENTS

5-14. ORTHOGONALITY, TRACE ALIGNMENT AND PATTERN ADJUSTMENT (Cont'd)

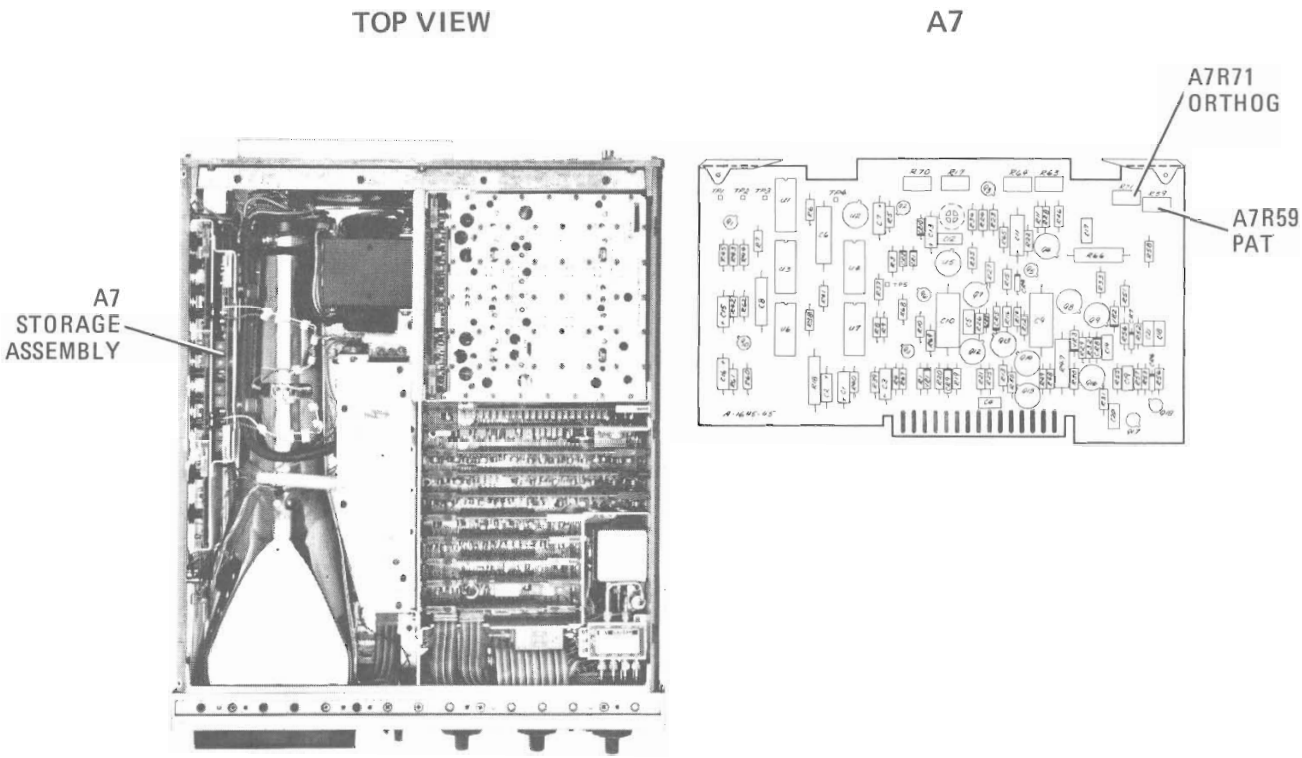

Figure 5-7. Orthogonality and Pattern Adjustment Locations

PROCEDURE:

a. Set LINE switch OFF, disconnect power cord, and remove 8565A top cover; remove A21 Video Assembly (Figure 5-7) and install extender board in its place.

b. Reconnect power cord, set LINE switch ON, and set 8565A controls as follows:

Set all Normal Settings (controls marked with green)
FREQUENCY BAND GHz . . . . . 3.8 – 8.5
SWEEP SOURCE . . . . . EXT
CONVentional . . . . . Depressed

c. Jumper extender board pin 44 to chassis ground.

d. Set function generator for a 5 kHz 0 to +10V sine wave output (+ DC offset) and connect output to rear panel EXT SWEEP INPUT connector.

Scans by ARTEK MEDIA =>

ADJUSTMENTS

5-14. ORTHOGONALITY, TRACE ALIGNMENT AND PATTERN ADJUSTMENT (Cont'd)

e. Position CRT trace on second horizontal graticule line from bottom with front panel VERT POSN control. Horizontally center CRT trace with function generator OUTPUT OFFSET control and adjust function generator AMPLITUDE vernier for a 10 division wide trace.

f. Adjust front panel TRACE ALIGN control to align trace with horizontal graticule line.

g. Position CRT trace on bottom horizontal graticule line with front panel VERT POSN control. Adjust A7R59 PAT (Pattern) (Figure 5-7) for a straight trace (minimum curvature).

h. Disconnect function generator and set its controls for a 5 kHz 0 to 0.8V sine wave output (+DC offset).

i. Disconnect jumper from extender board pin 44 and connect function generator output in its place.

j. Connect BNC short to rear panel EXT SWEEP INPUT connector.

k. Position CRT trace on center vertical graticule line with front panel HORIZ POSN control. Vertically center CRT trace with function generator OUTPUT OFFSET control and adjust function generator AMPLITUDE vernier for an 8 division high trace.

l. Align trace with vertical graticule line with A7R71 ORTHOG adjustment (Figure 5-7).

m. Disconnect function generator output from extender board and BNC short from rear panel EXT SWEEP INPUT connector.

n. Repeat steps c through m until no further adjustment is necessary.

o. Set LINE switch OFF and remove power cord. Remove extender board from A21 position and reinstall A21 Video Assembly. Replace 8565A top cover.

5-15. Z-AXIS GATE ADJUSTMENT

REFERENCE:

Service Sheet 30

DESCRIPTION:

A blanking pulse is connected to rear panel BLANKING INPUT connector. A4 Z-Axis Amplifier output (Z-Axis Gate) is checked with an oscilloscope. Z-Axis adjustments, HF ADJUST, HF GAIN, are set for Z-Axis gate output with fastest rise time and minimum ringing.

Scans by ARTEK MEDIA =>

ADJUSTMENTS

5-15. Z-AXIS GATE ADJUSTMENT (Cont'd)

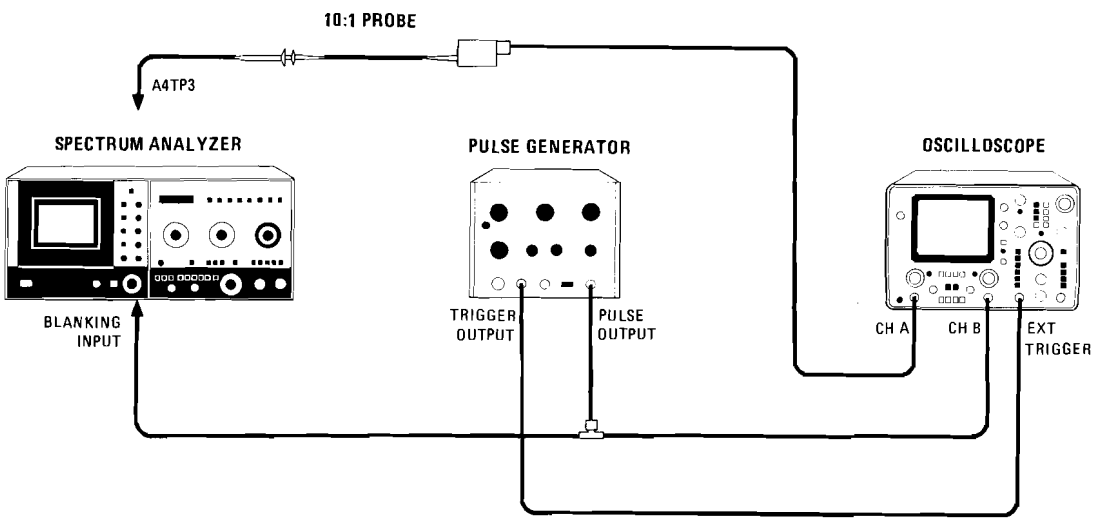

Figure 5-8. Z-Axis Gate Adjustment Test Setup

EQUIPMENT:

Oscilloscope	HP 1740A
Pulse Generator	HP 8002A
10:1 Divider Probe	HP 10004D
BNC Tee	1250-0781

Scans by ARTEK MEDIA =>

ADJUSTMENTS

5-15. Z-AXIS GATE ADJUSTMENT (Cont'd)

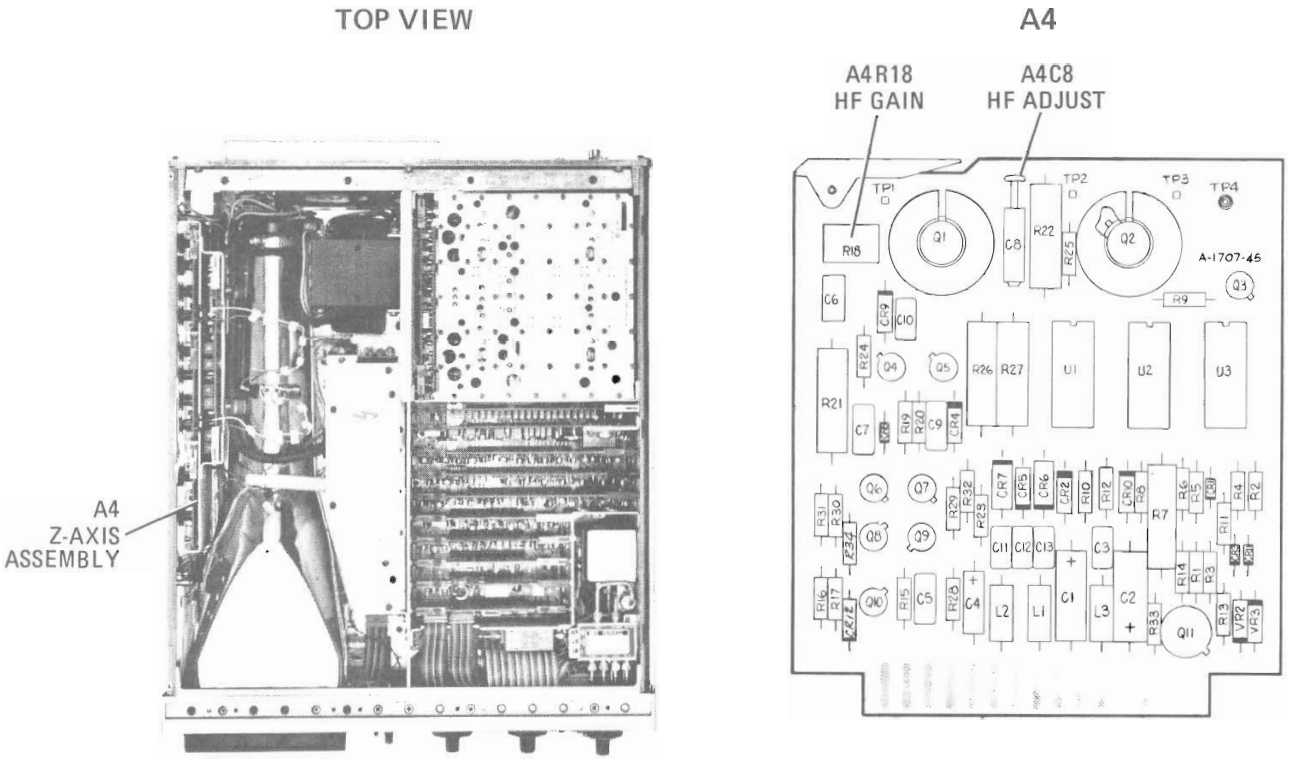

Figure 5-9. Z-Axis Gate Adjustment Locations

PROCEDURE:

a. Set LINE switch OFF, disconnect power cord, and remove 8565A top cover.

b. Reconnect power cord, set LINE switch ON, and set 8565A controls as follows:

Set all Normal Settings (controls marked with green)
SWEEP SOURCE ..... EXT
CONVentional ..... Depressed

c. Set pulse generator for a 0 to +4 volt pulse with a 10 microsecond pulse width repeating every 100 microseconds (10% duty cycle as shown in Figure 5-10).

d. Set HORIZ POSN and VERT POSN controls fully counterclockwise to put trace off CRT screen.

e. Set front panel INTENSITY control to midrange.

f. Connect oscilloscope (Channel A) to A4TP3 GATE OUT (Figure 5-9).

g. Set oscilloscope controls for a Channel A display as shown in Figure 5-11.

Scans by ARTEK MEDIA =>

5-15. Z-AXIS GATE ADJUSTMENT (Cont'd)

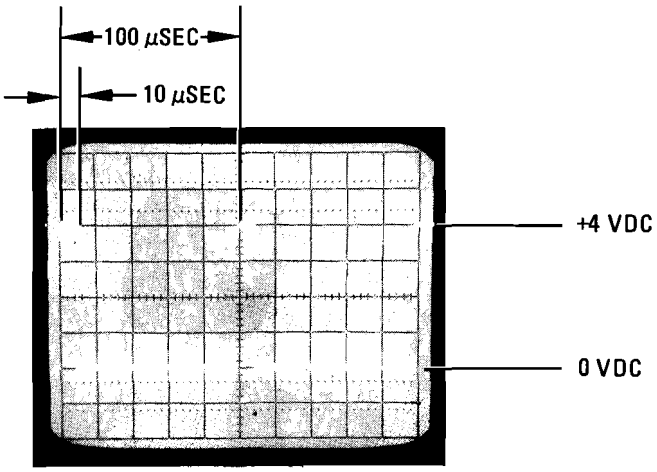

Figure 5-10. Pulse Generator Output for a 10% Duty Cycle

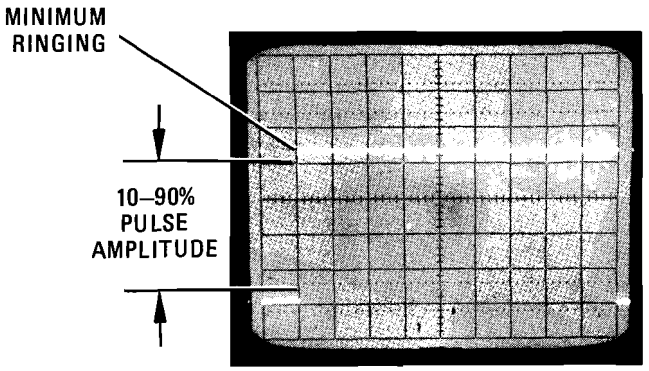

Figure 5-11. Z-Axis Gate Output Oscilloscope Display

h. Adjust A4C8 HF ADJUST and A4R18 HF GAIN (Figure 5-9) for an oscilloscope display with fastest rise time and minimum ringing (Figure 5-11). Check rise time between 10% and 90% of pulse amplitude. Rise time should be less than or equal to 50 nanoseconds.

i. Adjustment complete. Set LINE switch OFF, disconnect power cord, and replace 8565A top cover.

5-16. STORAGE DISPLAY ADJUSTMENTS

REFERENCE:

Service Sheet 31

DESCRIPTION:

The 8565A is operated in WRITE mode with INTENSITY and PERSISTence controls turned fully counterclockwise. The CRT background brightness is set by adjusting the Flood Gun Grid voltage. The Collimation adjustment is then made for a Flood Gun pattern that just covers the CRT screen. WRITE DEPTH is set so the CRT screen turns dark green after the display is erased. The Intensity/Persistence adjustment is set for a trace of approximately the same brightness in either the maximum or minimum persistence settings.

Scans by ARTEK MEDIA =>

5-16. STORAGE DISPLAY ADJUSTMENTS (Cont'd)

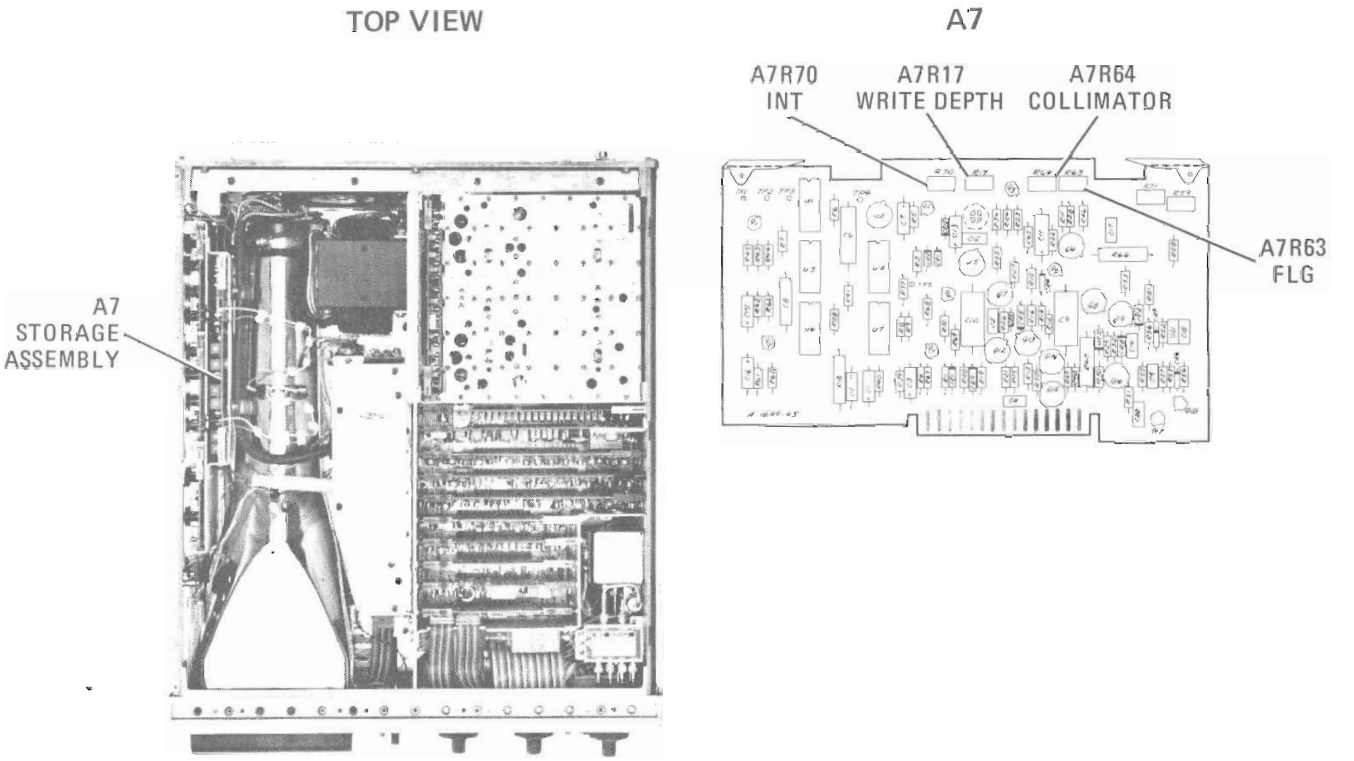

Figure 5-12. Storage Assembly Adjustment Locations

PROCEDURE:

a. Set LINE switch OFF, disconnect power cord, and remove 8565A top cover.

b. Reconnect power cord, set LINE switch ON, and set 8565A controls as follows:

Set all Normal Settings (controls marked with green)

INPUT ATTEN	10 dB
REF LEVEL	−10 dBm
REF LEVEL FINE	0
RESOLUTION BW	100 kHz
FREQUENCY SPAN/DIV	2 MHz
TUNING	0.100 GHz

Scans by ARTEK MEDIA =>

5-16. STORAGE DISPLAY ADJUSTMENTS (Cont'd)

Collimation

c. Set front panel INTENSITY and PERSIST controls fully counterclockwise.

d. Press and release front panel ERASE pushbutton.

e. Set A7R64 COLLIMATOR adjustment (Figure 5-12) for an overcollimated CRT display as shown in Figure 5-13 (bright green center area with dark edges.)

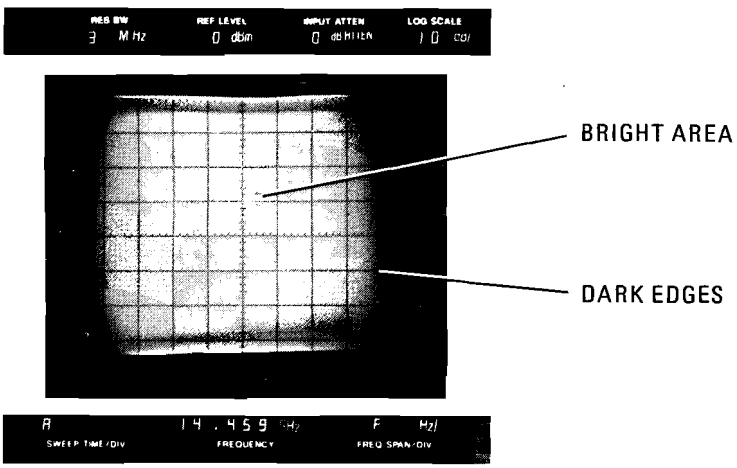

Figure 5-13. Overcollimated CRT Display

f. Set A7R63 FLG (Flood Gun Grid) (Figure 5-12) fully counterclockwise.

NOTE

When adjusting FLG in step g, the background brightness will first increase rapidly, then increase more slowly, then decrease (starting at the edges). Set FLG at point of transition from rapid increase to increasing more slowly in pattern brightness.

g. Slowly adjust A4R63 FLG clockwise until initial rapid increase in pattern brightness is passed.

h. Slowly adjust A7R64 COLLIMATOR (Figure 5-12) clockwise until bright green area just fills CRT screen.

i. Connect 100 MHz CAL OUTPUT to INPUT 50Ω and adjust INTENSITY and TUNING controls to display the 100 MHz signal at center of CRT screen. If CRT background brightness is changing with the sweep rate, readjust A7R64 COLLIMATOR to eliminate flickering background brightness.

Scans by ARTEK MEDIA =>

5-16. STORAGE DISPLAY ADJUSTMENTS (Cont'd)

Write Depth

j. Set front panel INTENSITY control fully counterclockwise and front panel PERSIST control fully clockwise.

k. Set A7R17 WRITE DEPTH (Figure 5-12) fully clockwise. Press and release front panel ERASE pushbutton; note that CRT screen remains bright green.

l. Adjust A7R17 WRITE DEPTH counterclockwise until CRT screen turns dark green after pressing and releasing ERASE pushbutton. Then set A7R17 WRITE DEPTH approximately 10 degrees further counterclockwise.

Intensity/Persistance

m. Adjust front panel INTENSITY, and TUNING controls to display 100 MHz signal at center of CRT screen.

n. Set front panel PERSIST control fully clockwise and adjust front panel INTENSITY control for a signal with minimum brightness.

o. Adjust A7R103 INT (Figure 5-12) for a CRT display of approximately same intensity with the PERSIST control set either fully clockwise or fully counterclockwise.

p. Set LINE switch OFF, disconnect power cord, and install 8565A top cover.

5-17. HORIZONTAL AND VERTICAL GAIN ADJUSTMENTS

REFERENCE:

Service Sheets 28 and 29

DESCRIPTION:

The CRT trace is horizontally centered, then horizontal gain is adjusted for a 10 division wide trace. The trace is positioned on the bottom horizontal graticule line and the 100 MHz CAL OUTPUT is applied as the spectrum analyzer input. REF LEVEL CAL is adjusted for an 800 millivolt output from A21 Video Assembly and the vertical gain is adjusted for eight divisions of CRT trace deflection.

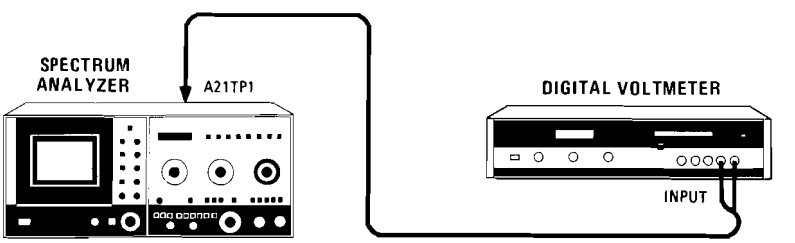

Figure 5-14. Horizontal and Vertical Gain Adjustments Test Setup

Scans by ARTEK MEDIA =>

ADJUSTMENTS

5-17. HORIZONTAL AND VERTICAL GAIN ADJUSTMENTS (Cont'd)

EQUIPMENT:

Digital Voltmeter . . . . . HP 3490A

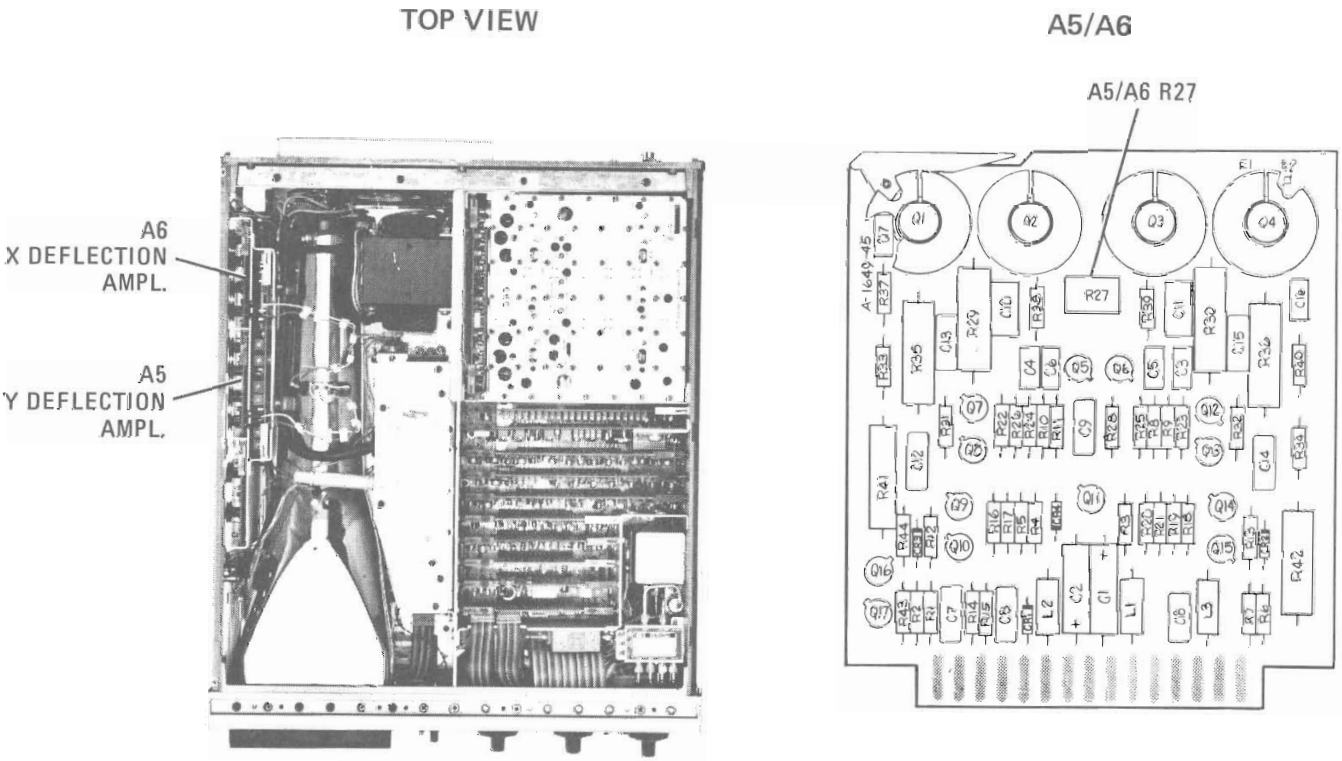

Figure 5-15. Horizontal and Vertical Gain Adjustment Locations

PROCEDURE:

a. Set LINE switch OFF, disconnect power cord and remove 8565A top cover.

b. Reconnect power cord, set LINE switch ON, connect equipment as shown in Figure 5-14, and set 8565A controls as follows:

Set all Normal Settings (controls marked with green)

FREQUENCY BAND GHz	.01 — 1.8
RESOLUTION BW (uncoupled)	1 MHz
FREQUENCY SPAN/DIV	20 kHz
INPUT ATTEN	10 dB
REF LEVEL	−10 dBm
REF LEVEL FINE	0
AMPLITUDE SCALE	LIN
TUNING	100 MHz

Scans by ARTEK MEDIA =>

ADJUSTMENTS

5-17. HORIZONTAL AND VERTICAL GAIN ADJUSTMENTS (Cont'd)

c. Adjust front panel VERT POSN for CRT trace two divisions above bottom horizontal graticule line.

d. Simultaneously depress EXT and INT SWEEP SOURCE pushbuttons to obtain a dot on CRT display.

e. Adjust front panel HORIZ POSN to set dot on center vertical graticule line.

f. Switch SWEEP SOURCE to INT.

NOTE

Horizontal gain adjustment (A6R27) assumes the A16 Sweep Generator INT SWP ramp output is a −5 to +5 volts ramp (see Paragraph 5-21 Sweep Generator Adjustments).

g. Adjust A6R27 GAIN for a 10-division wide CRT trace.

h. Repeat steps d through g until no further adjustment is necessary.

i. Adjust front panel VERT POSN to set CRT trace on bottom horizontal graticule line and note voltage at A21TP1.

j. Connect 100 MHz CAL OUTPUT signal to INPUT 50Ω connector and adjust front panel TUNING control to center 100 MHz signal on CRT display.

k. Adjust front panel REF LEVEL CAL for 800 millivolts plus offset measured in step i at A21TP1.

l. Adjust A5R27 GAIN to set signal peak on top horizontal graticule line.

m. Disconnect 100 MHz CAL OUTPUT signal and repeat steps i through l until no further adjustment is necessary.

n. Adjustment complete. Set LINE switch OFF, disconnect power cord, and install 8565A top cover.

5-18. LOG AMPLIFIER ADJUSTMENT

REFERENCE:

Service Sheet 24

DESCRIPTION:

Step attenuators are used to change spectrum analyzer input signal level in calibrated steps. The A21 Video Assembly output is monitored and adjustments are performed to calibrate the A22 Log Amplifier Assembly.

Scans by ARTEK MEDIA =>

5-18. LOG AMPLIFIER ADJUSTMENTS (Cont'd)

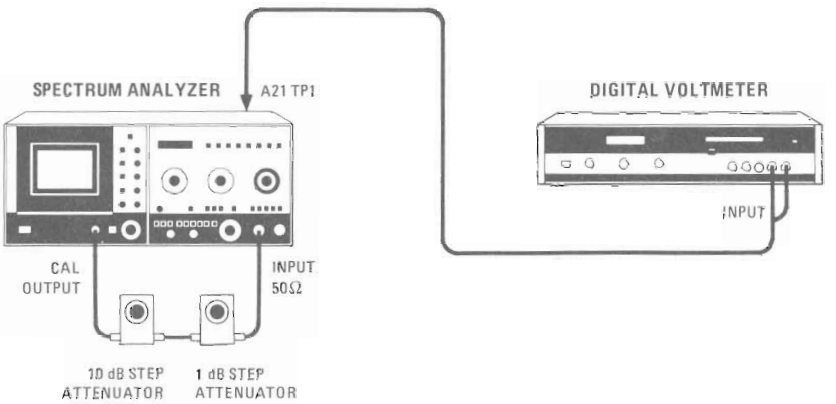

Figure 5-16. Log Amplifier Adjustment Test Setup

EQUIPMENT:

Digital Voltmeter ..... HP 3490A
10-dB Step Attenuator ..... HP 355D H80
1-dB Step Attenuator ..... HP 355C H80

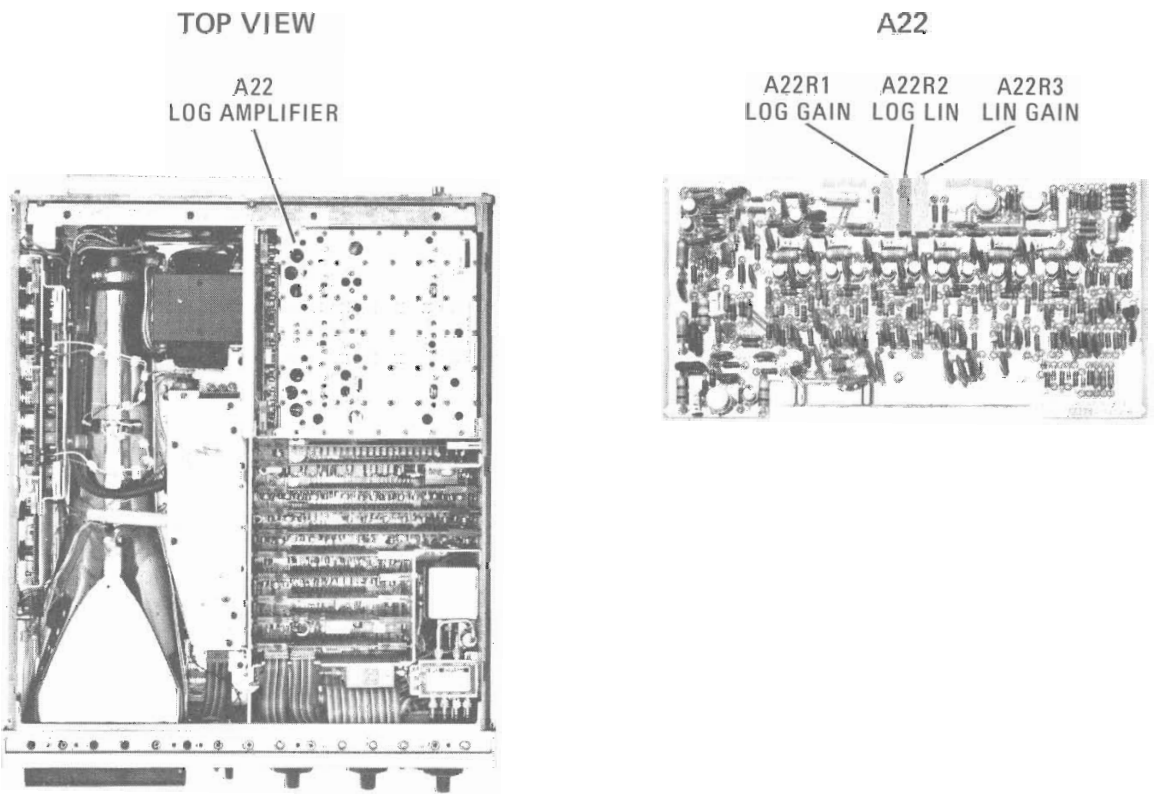

Figure 5-17. Log Amplifier Adjustment Locations

Scans by ARTEK MEDIA =>

5-18. LOG AMPLIFIER ADJUSTMENTS (Cont'd)

PROCEDURE:

a. Set LINE switch OFF, disconnect power cord, and remove 8565A top cover.

b. Reconnect power cord, set LINE switch ON, connect equipment as shown in Figure 5-16, and set 8565A controls as follows:

Set all Normal Settings (controls marked with green)
FREQUENCY BAND GHz ..... .01 – 1.8
INPUT ATTEN ..... 0 dB
REF LEVEL ..... 0 dBm
REF LEVEL FINE 0
RESOLUTION BW ..... 10 kHz
FREQUENCY SPAN/DIV ..... 20 kHz
AMPLITUDE SCALE ..... LIN
TUNING ..... 0.100 GHz

c. Set 10 dB step attenuator to 120 dB. Adjust front panel VERT POSN for 0.000 volts at A21TP1.

d. Set REF LEVEL to −50 dBm. Set 10 dB step attenuator to 40 dB and 1 dB step attenuator to 0 dB.

e. Adjust TUNING control to center 100 MHz signal on CRT display. Select ZERO SPAN FREQUENCY SPAN MODE and set VIDEO FILTER to NOISE AVG. Peak signal with FINE TUNING control.

f. Adjust front panel REF LEVEL CAL for 800 mV ± 1 mV at A21TP1.

g. Set REF LEVEL control to −80 dBm and 10 dB step attenuator to 70 dB. Adjust A22R3 LIN GAIN for 800 mV at A21TP1.

h. Step REF LEVEL control from −50 dBm to −90 dBm and 10 dB step attenuator from 40 dB to 80 dB. Check voltage at A21TP1 for each step as shown in Table 5-5. If voltage at A21TP1 is not within limits, readjust A22R3 LIN GAIN.

Table 5-5. Linear Gain Adjustment Limits

REF LEVEL	10-dB Step Attenuator	Voltage (A21TP1)
−50 dBm	40 dB	800 mV (Reference)
−60 dBm	50 dB	800 mV ±20 mV
−70 dBm	60 dB	800 mV ±20 mV
−80 dBm	70 dB	800 mV ±20 mV
−90 dBm	80 dB	800 mV ±30 mV

Scans by ARTEK MEDIA =>

5-18. LOG AMPLIFIER ADJUSTMENTS (Cont'd)

i. Set REF LEVEL control to −10 dBm and 10 dB step attenuator to 0 dB.

j. Set AMPLITUDE SCALE to 10 dB and adjust A22R2 LOG LIN for 800 mV at A21TP1.

k. Step 10 dB step attenuator from 0 dB to 110 dB and check voltage at A21TP1 as shown in Table 5-6. If voltage at A21TP1 is not within limits, readjust A22R2 LOG LIN.

Table 5-6. Log Fidelity Check

10-dB Step Attenuator	Voltage (A21TP1)
0 dB	800 mV (Reference)
10 dB	700 mV ±3 mV
20 dB	600 mV ±4 mV
30 dB	500 mV ±4 mV
40 dB	400 mV ±5 mV
50 dB	300 mV ±6 mV
60 dB	200 mV ±7 mV
70 dB	100 mV ±8 mV
110 dB	⩽ 30 mV

l. Set AMPLITUDE SCALE to LIN and 10 dB step attenuator to 0 dB. Adjust REF LEVEL CAL for 800 mV at A21TP1. Note signal level on CRT display.

m. Switch AMPLITUDE SCALE to 1 dB and adjust A21R92 OFFSET for same signal level noted in step l.

n. Set AMPLITUDE SCALE to LIN and 10 dB step attenuator to 110 dB. Adjust VERT POSN to set CRT trace on bottom horizontal graticule line.

o. Repeat steps l through n until no further adjustment is necessary.

p. Set AMPLITUDE SCALE to 1 dB and set 10 dB step attenuator to 0 dB. Step 1 dB step attenuator from 0 dB to 9 dB and check voltage at A21TP1 as shown in Table 5-7.

Scans by ARTEK MEDIA =>

5-18. LOG AMPLIFIER ADJUSTMENTS (Cont'd)

Table 5-7. Log/Lin Correlation Check

1-dB Step Attenuator	Voltage (A21TP1)
0 dB	800 mV (Reference)
1 dB	790 mV ±1 mV
2 dB	780 mV ±2 mV
3 dB	770 mV ±3 mV
4 dB	760 mV ±3 mV
5 dB	750 mV ±3 mV
6 dB	740 mV ±3 mV
7 dB	730 mV ±3 mV
8 dB	720 mV ±3 mV
9 dB	710 mV ±3 mV

q. Set REF LEVEL control to −50 dBm. Set 10 dB step attenuator to 40 dB and 1 dB step attenuator to 1 dB. Adjust REF LEVEL CAL for 790 mV at A21TP1.

r. Set REF LEVEL control to −90 dBm and 10 dB step attenuator to 80 dB. Adjust A22R1 LOG GAIN for 790 mV at A21TP1.

s. Step REF LEVEL control from −50 dBm to −90 dBm and step 10 dB step attenuator from 40 dB to 80 dB (total attenuation stepped from 41 dB to 81 dB). Check voltage at A21TP1 for each step as shown in Table 5-8. If voltage at A21TP1 is not within limits, readjust A22R1 LOG GAIN.

Scans by ARTEK MEDIA =>

5-18. LOG AMPLIFIER ADJUSTMENTS (Cont'd)

Table 5-8. Log Gain Adjustment Limits

REF LEVEL	Total Attenuation (10 dB and 1 dB Step Atten.)	Voltage (A21TP1)
−50 dBm	41 dB	790 mV (Reference)
−60 dBm	51 dB	790 mV ±30 mV
−70 dBm	61 dB	790 mV ±30 mV
−80 dBm	71 dB	790 mV ±30 mV
−90 dBm	81 dB	790 mV ±30 mV

t. Set AMPLITUDE SCALE to LIN and REF LEVEL control to −10 dBm. Set 10 dB and 1 dB step attenuators to 0 dB. Adjust REF LEVEL CAL for signal level at REFERENCE LEVEL graticule line.

u. Select each AMPLITUDE SCALE (10 dB, 5 dB, 2 dB and 1 dB) and check that CRT trace does not shift more than 0.5 dB from REFERENCE LEVEL graticule line. If signal shift is greater than 0.5 dB, repeat steps k through n.

v. Adjustment complete, set LINE switch OFF, disconnect power cord, and replace 8565A top cover.

5-19. BANDWIDTH FILTER ADJUSTMENTS

REFERENCE:

Service Sheets 21, 23 and 25

DESCRIPTION:

Three of the four crystal filters are disabled with crystal shorts. The fourth crystal filter is then adjusted for a symmetrical and centered bandwidth. The crystal shorts are removed one at a time, and the respective crystal filter is adjusted for a symmetrical and centered bandwidth. The LC filters are adjusted by a similar method. The 3-dB bandwidths are checked for each RESOLUTION BW and adjustments performed for correct bandwidths.

Scans by ARTEK MEDIA =>

5-19. BANDWIDTH FILTER ADJUSTMENTS (Cont'd)

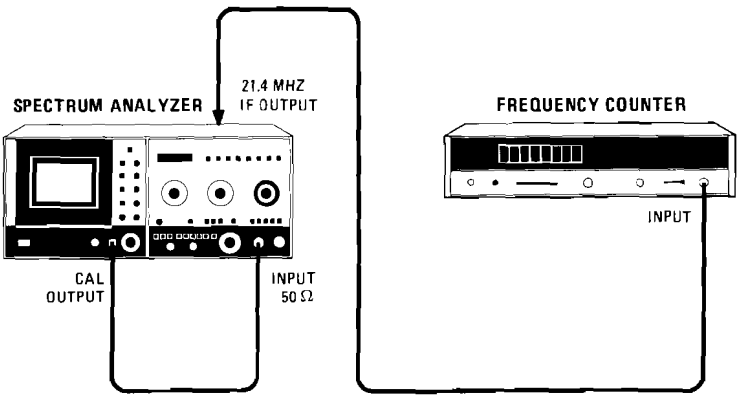

Figure 5-18. Bandwidth Filter Adjustment Test Setup

EQUIPMENT:

Frequency Counter. 5340A
Crystal Short (Qty 3). . . . . See Figure 5-19

NOTE

A crystal short consists of a .01 μF capacitor (HP Part No. 0160-0161) and 90.9 ohm resistor (HP Pat No. 0757-0400) connected in series. Two square terminal connectors (HP Part No. 0362-0265) are used for connecting the crystal short across the test points.

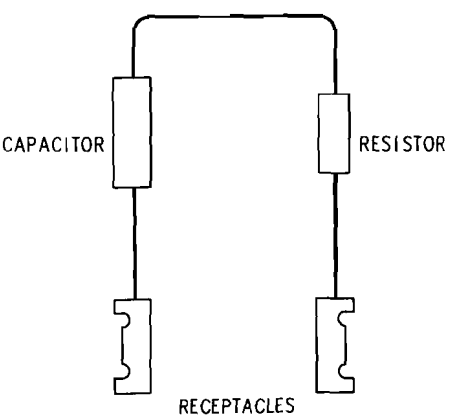

Figure 5-19. Crystal Short Configuration

Scans by ARTEK MEDIA =>

5-19. BANDWIDTH FILTER ADJUSTMENTS (Cont'd)

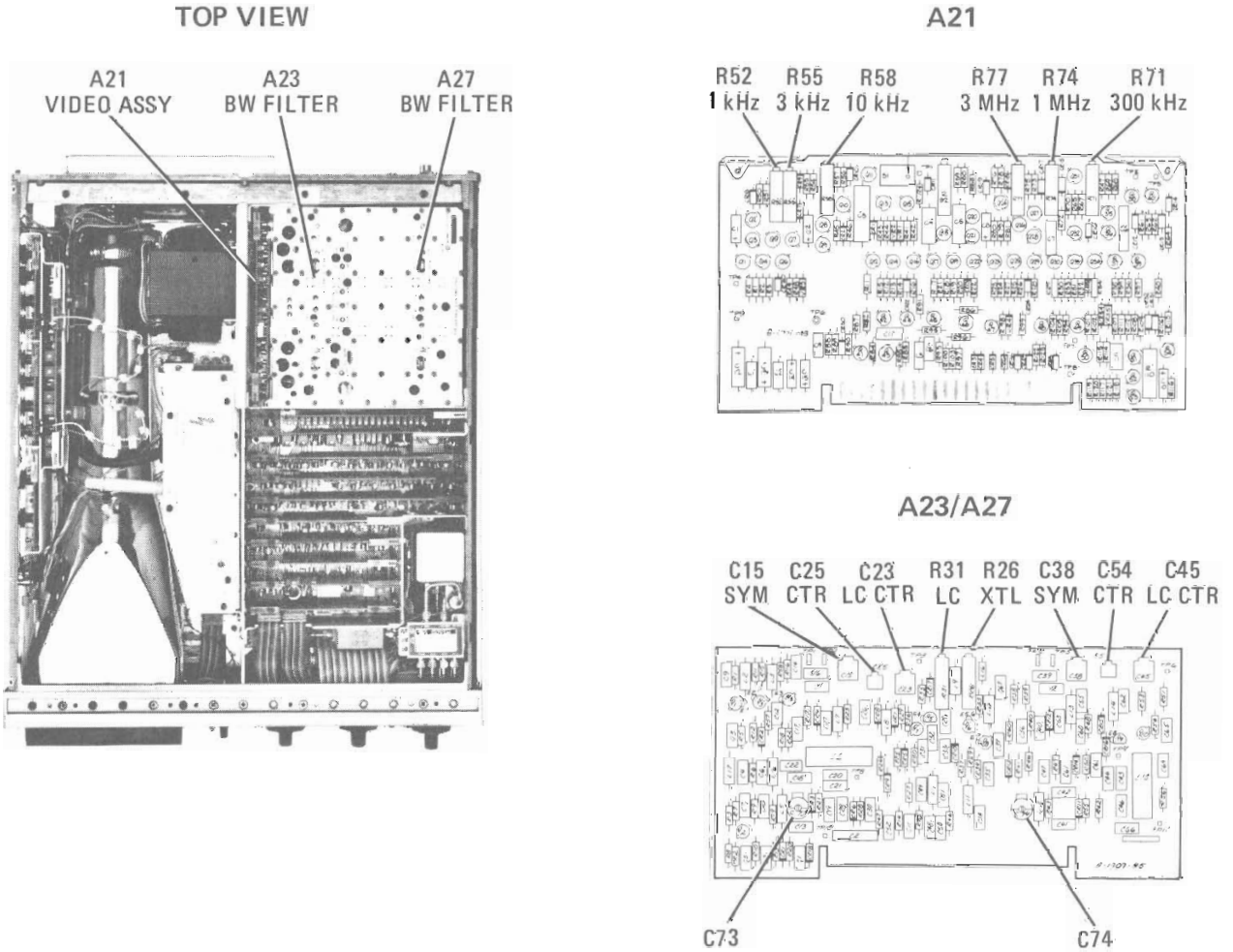

Figure 5-20. Bandwidth Filter Adjustment Locations

PROCEDURE:

a. Set LINE switch OFF, disconnect power cord, and remove 8565A top cover.

b. Reconnect power cord, set LINE switch ON, and set 8565A controls as follows:

Set all Normal Settings (controls marked with green)

FREQUENCY BAND GHz	.01 – 1.8
INPUT ATTEN	10 dB
REF LEVEL	–10 dBm
REF LEVEL FINE	0
RESOLUTION BW	30 kHz
FREQUENCY SPAN/DIV	20 kHz
AMPLITUDE SCALE	LIN
TUNING	100 MHz

Scans by ARTEK MEDIA =>

5-19. BANDWIDTH FILTER ADJUSTMENTS (Cont'd)

c. Connect 100 MHz CAL OUTPUT signal to INPUT 50Ω connector and adjust TUNING control to center 100 MHz signal on CRT display.

d. Connect crystal shorts across each pair of the following test points: A23TP1-A23TP2, A27TP1-A27TP2, and A27TP4-A27TP5.

e. Adjust front panel TUNING control to center bandpass spike (Figure 5-21) on CRT display.

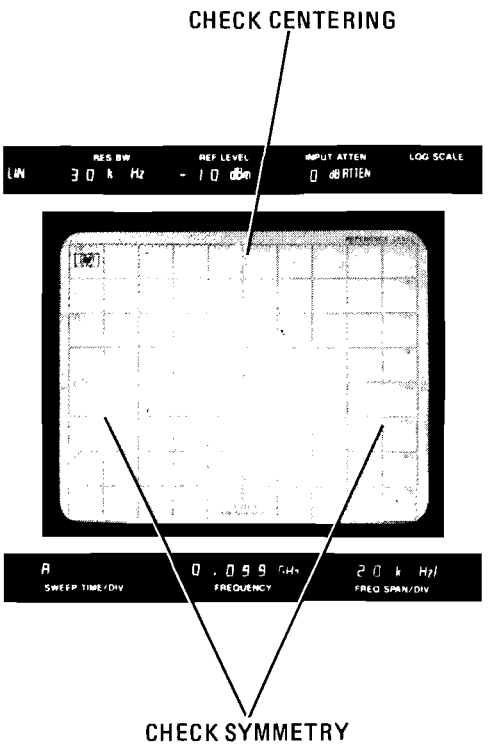

Figure 5-21. Crystal Filter Adjustment CRT Display

NOTE

A non-metallic tuning tool is required for all crystal filter and LC filter adjustments.

f. Adjust A23C54 CTR and A23C38 SYM for a centered and symmetrical bandpass. Crystal center adjustment A23C54 is adjusted for minimum signal amplitude (Figure 5-21).

g. Remove crystal short across A23TP1 — A23TP2.

h. Adjust A23C25 CTR and A23C15 SYM for a centered and symmetrical bandpass. Crystal center adjust A23C25 is adjusted for minimum signal amplitude (Figure 5-21).

Scans by ARTEK MEDIA =>

5-19. BANDWIDTH FILTER ADJUSTMENTS (Cont'd)

i. Switch AMPLITUDE SCALE to 5 dB and remove crystal short across A27TP4 — A27TP5.

j. Adjust A27C54 CTR and A27C38 SYM for a centered and symmetrical bandpass. Crystal center adjustment A27C54 is adjusted for minimum signal amplitude (Figure 5-21).

k. Remove crystal short across A27TP1 — A27TP2.

l. Adjust A27C25 CTR and A27C15 SYM for a centered and symmetrical bandpass. Crystal center adjustment A27C25 is adjusted for minimum signal amplitude (Figure 5-21).

m. Set FREQUENCY SPAN/DIV to 20 kHz and AMPLITUDE SCALE to LIN. Adjust TUNING control to center 100 MHz signal on CRT display, then set RESOLUTION BW control to 3 MHz. Set A21S1 NORM-TEST switch to TEST.

n. Put A23 and A27 BW Filter Assemblies on extender boards and perform preliminary LC Filter adjustment as follows:

   1. Short to ground the following test points: A23TP6, A27TP3, and A27TP6.

   2. Adjust A23C73 for minimum signal amplitude.

   3. Disconnect short to ground from A23TP6 and connect short to A23TP3. Adjust A23C74 for minimum signal amplitude.

   4. Disconnect short to ground from A27TP3 and connect short to A23TP3. Adjust A27C73 for minimum signal amplitude.

   5. Disconnect short to ground from A27TP6 and connect short to A27TP3. Adjust A27C74 for minimum signal amplitude.

   6. Remove jumpers to ground and reinstall A23 and A27 BW Filter Assemblies.

NOTE

When A23 and A27 BW Filter Assemblies are installed with covers in place, midget copper alligator clips (HP Part No. 1400-0483) can be used to short test points to the cover.

o. Short to ground A23TP6, A27TP3, and A27TP6. Adjust A23C23 LC CTR to center bandpass display on CRT screen.

p. Disconnect short to ground from A23TP6. Adjust A23C45 LC CTR to center bandpass display on CRT screen.

q. Disconnect short to ground from A27TP3. Short to ground A23TP3 and A23TP6.

r. Adjust A27C23 LC CTR to center bandpass display on CRT screen.

Scans by ARTEK MEDIA =>

5-19. BANDWIDTH FILTER ADJUSTMENTS (Cont'd)

s. Disconnect short to ground from A27TP6. Adjust A27C45 LC CTR to center bandpass display on CRT screen.

t. Disconnect shorts to ground from A23TP3 and A23TP6. Set RESOLUTION BW to 30 kHz and FREQUENCY SPAN/DIV to 2 kHz. Adjust TUNING control to center bandpass display on CRT screen.

u. Switch RESOLUTION BW from 30 kHz to 10 kHz and check signal shift does not exceed 3 kHz (1.5 divisions). Switch RESOLUTION BW from 30 kHz to 100 kHz and check signal shift does not exceed 10 kHz (5 divisions). If signal shift is out of tolerance, repeat steps m through u.

v. Set A21S1 NORM-TEST switch to NORM. Set AMPLITUDE SCALE to 1 dB, RESOLUTION BW to 3 MHz, and FREQUENCY SPAN/DIV to .5 MHz. Adjust REF LEVEL FINE to set signal level to REFERENCE LEVEL graticule line.

NOTE

Adjustment of 3-dB bandwidth for 100 kHz and 30 kHz RESOLUTION BW positions requires changing factory selected resistors. The 100 kHz bandwidth will widen with an increase in resistor values. The 30 kHz bandwidth will narrow with an increase in resistor values. While the resistor values selected for each bandwidth (100 kHz or 30 kHz) do not need to be the same value, they should not vary from each other by more than 10%.

w. Perform 3-dB bandwidth adjustments listed in Table 5-9. Maintain a signal level on REFERENCE LEVEL graticule line, and adjust for correct bandwidth three divisions below REFERENCE LEVEL (Figure 5-22). Check 3-dB bandwidth accuracy after each adjustment with a frequency counter as follows:

1. Set SWEEP SOURCE to MAN, and connect frequency counter to rear panel 21.4 MHz IF OUTPUT connector.

2. Adjust MANUAL SWEEP control to position CRT trace at lower frequency 3 dB point, then upper frequency 3 dB point. Note frequency difference between 3-dB points is within 15% of selected RESOLUTION BW. If not, repeat coresponding 3-dB bandwidth adjustment.

3. Set SWEEP SOURCE to INT.

Scans by ARTEK MEDIA =>

5-19. BANDWIDTH FILTER ADJUSTMENTS (Cont'd)

Table 5-9. 3-dB Bandwidth Adjustments and Limits

RESOLUTION BW	FREQUENCY SPAN/DIV	ADJUSTMENT	Width of signal on 5th Graticule (Division)
3 MHz	.5 MHz	A21R77 3 MHz	5.6 to 6.4
1 MHz	.2 MHz	A21R74 1 MHz	4.7 to 5.3
300 kHz	50 kHz	A21R71 300 kHz	5.6 to 6.4
100 kHz	20 kHz	A23R19*, A23R43*, A27R43*	4.7 to 5.3
30 kHz	5 kHz	A23R23*, A23R48* A27R23*, A27R48*	5.5 to 6.5
10 kHz	2 kHz	A21R58 10 kHz	4.7 to 5.3
3 kHz	1 kHz	A21R55 3 kHz	2.8 to 3.2
1 kHz	1 kHz	A21R52 1 kHz	.9 to 1.1

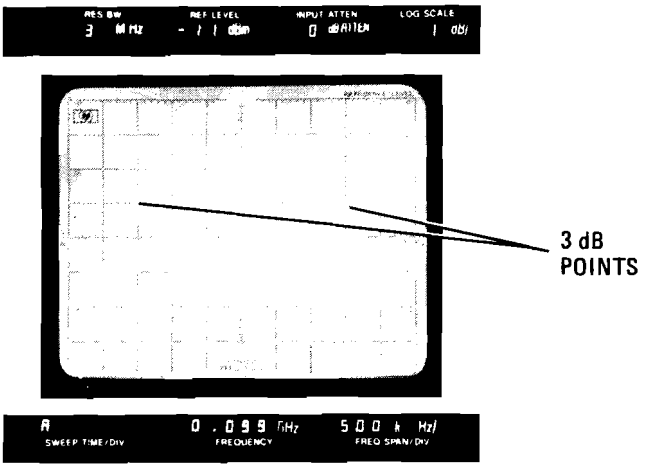

Figure 5-22. 3 dB Bandwidth Adjustment CRT Display

Scans by ARTEK MEDIA =>

5-19. BANDWIDTH FILTER ADJUSTMENTS (Cont'd)

x. Set RESOLUTION BW to 3 MHz, FREQUENCY SPAN/DIV to 2 kHz, and AUTO STABILIZER on.

y. Adjust FINE TUNING and REF LEVEL FINE for a centered signal with seven division amplitude.

z. Set RESOLUTION BW to 100 kHz and center signal with FINE TUNING control. Adjust A23R26 and A27R26 LC equally to obtain a seven division amplitude signal.

aa. Set RESOLUTION BW to 1 kHz and center signal aith FINE TUNING control. Adjust A23R31 and A27R31 XTL equally to obtain a seven division amplitude signal.

bb. Step RESOLUTION BW from 1 kHz to 3 MHz and check amplitude variation does not exceed +0.85 division or −0.75 division. Amplitude variation between 300 kHz and 3 MHz should not exceed ±0.4 division.

cc. Adjustment complete, set LINE switch OFF, remove power cord, and install 8565A top cover.

5-20. STEP GAIN ADJUSTMENTS

5-20. Step Gain Adjustments

REFERENCE:

Service Sheet 22

DESCRIPTION:

0 dB and −12 dB adjustments are set to calibrate front panel REF LEVEL FINE control. The Step Gain amplifier is then adjusted for calibrated 10 dB steps.

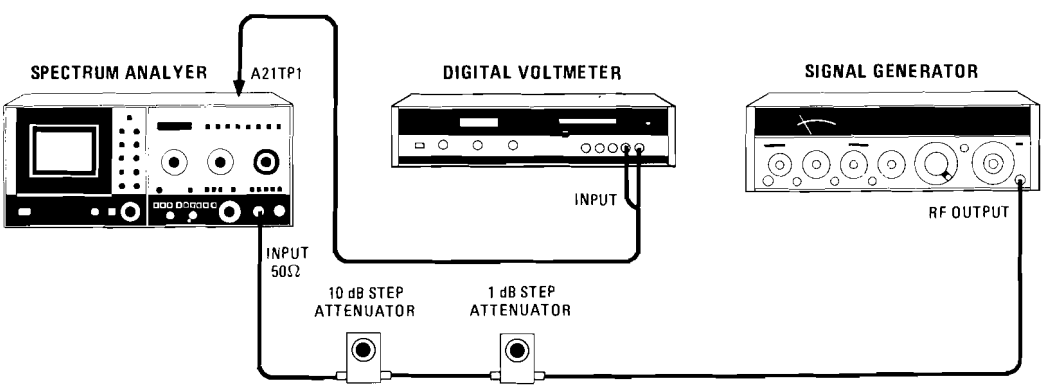

Figure 5-23. Step Gain Adjustment Test Setup

Scans by ARTEK MEDIA =>

ADJUSTMENTS

5-20. STEP GAIN ADJUSTMENTS (Cont'd)

EQUIPMENT:

10 dB Step Attenuator	HP 355D H80
1 dB Step Attenuator	HP 355C H80
Digital Voltmeter	HP 3490A
Signal Generator	HP 8640B

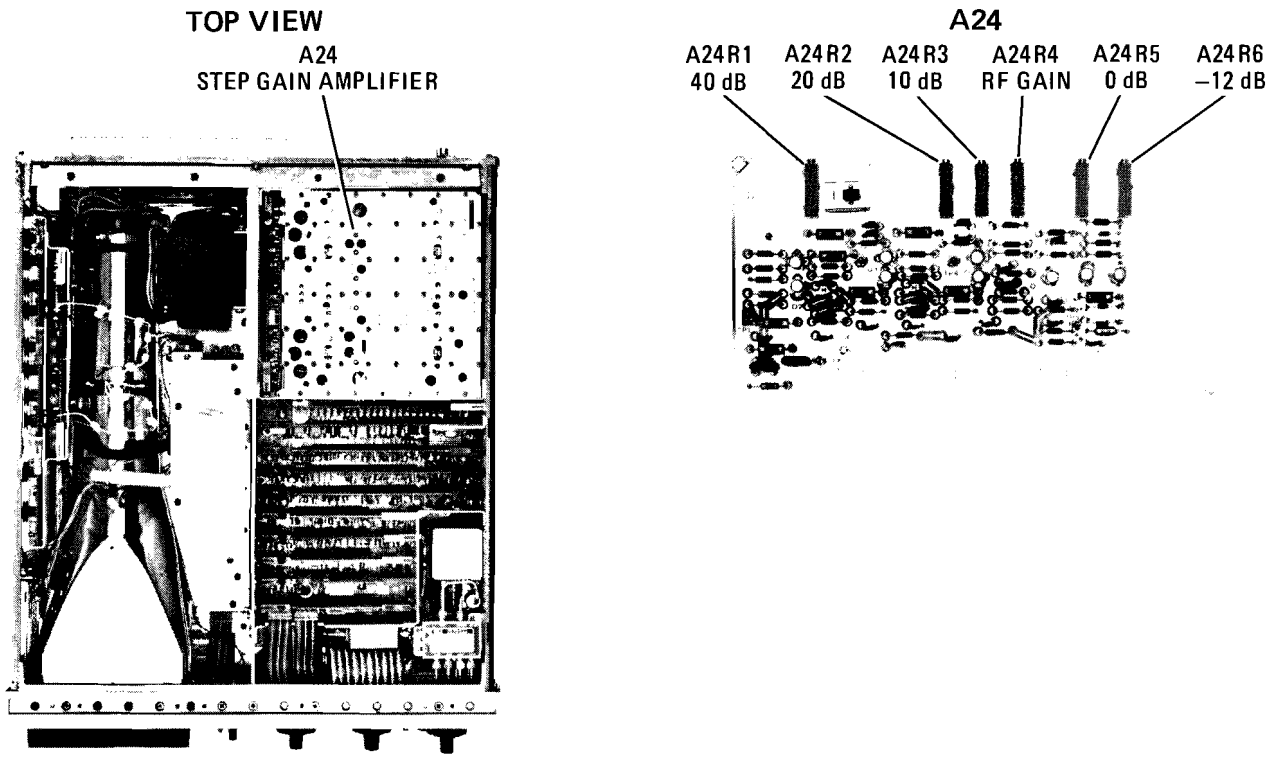

Figure 5-24. Step Gain Adjustment Locations

PROCEDURE:

a. Set LINE switch OFF, disconnect power cord, and install 8565A top cover.

b. Reconnect power cord, set LINE switch ON, connect equipment as shown in Figure 5-23, and set 8565A controls as follows:

Scans by ARTEK MEDIA =>

ADJUSTMENTS

5-20. STEP GAIN ADJUSTMENTS (Cont'd)

Set all Normal Settings (controls marked with green)

FREQUENCY BAND GHz ..... .01 – 1.8
INPUT ATTEN ..... 0 dB
REF LEVEL ..... 0 dBm
REF LEVEL FINE ..... –12 dB
RESOLUTION BW ..... 1 MHz
FREQUENCY SPAN/DIV ..... .5 MHz
FREQUENCY SPAN MODE ..... ZERO SPAN
AMPLITUDE SCALE ..... 1 dB
VIDEO FILTER ..... .01
TUNING ..... 100 MHz

c. Set 10 dB step attenuator to 0 dB and 1 dB step attenuator to 12 dB. Set signal generator for a 100 MHz, 0 dBm output.

d. Adjust REF LEVEL CAL and FINE TUNING control to obtain visible CRT trace. Adjust FINE TUNING control to peak CRT trace.

e. Adjust A24R6 –12 dB for maximum signal level on CRT display. Then adjust A24R6 –12 dB counterclockwise to set signal level 0.4 divisions below maximum.

f. Adjust REF LEVEL CAL to position CRT trace on REFERENCE LEVEL graticule line.

g. Set REF LEVEL FINE control to 0 dB and 1 dB step attenuator to 0 dB.

h. Adjust A24R5 0 dB to position CRT trace on REFERENCE LEVEL graticule line.

i. Set REF LEVEL control to 0 dBm and adjust A24R4 RF GAIN for 800 millivolts at A21TP1.

j. Perform step gain adjustments for each REF LEVEL and 10 dB step attenuator setting in Table 5-10.

k. Adjustment complete. Set LINE switch OFF, disconnect power cord, and install 8565A top cover.

Table 5-10. REF LEVEL Step Gain Adjustment

REF LEVEL	10 dB Step Attenuator	Adjustment	Voltage A21TP1
0 dBm	0 dB	A24R4 GAIN	800 mV (Reference)
–10 dBm	10 dB	A24R3 10 dB	800 mV ±20 mV
–20 dBm	20 dB	A24R2 20 dB	800 mV ±20 mV
–30 dBm	30 dB	None	800 mV ±20 mV
–40 dBm	40 dB	A24R1 40 dB	800 mV ±20 mV
–50 dBm	50 dB	None	800 mV ±20 mV

Scans by ARTEK MEDIA =>

ADJUSTMENTS

5-21. SWEEP GENERATOR ADJUSTMENTS

REFERENCE:

Service Sheet 10

DESCRIPTION:

The +10 volts Temperature Variable supply (+10VTV) is adjusted during the first five minutes of instrument operation. The sweep generator is then adjusted to start retrace when the sweep ramp reaches plus five volts. Rear panel INT SWEEP OUTPUT is used to externally sweep an oscilloscope, and a time mark generator is used to calibrate the sweep time.

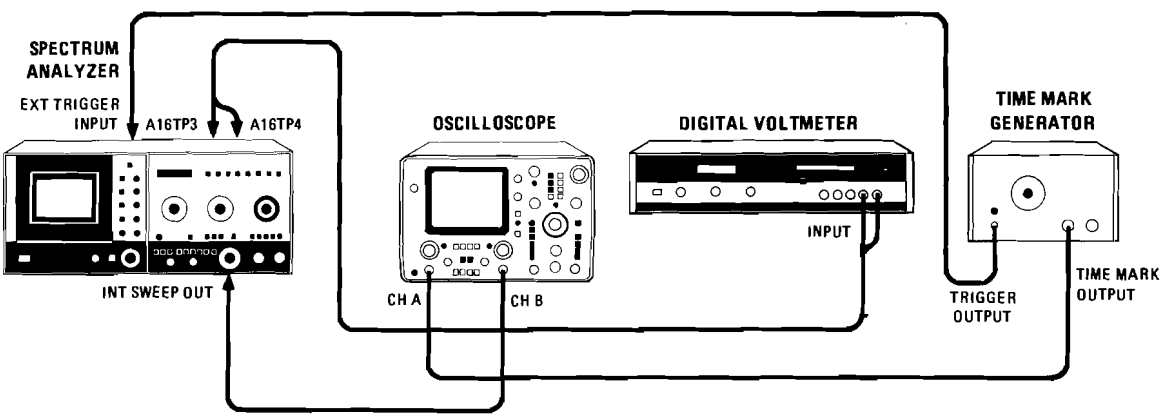

Figure 5-25. Sweep Generator Adjustment Test Setup

EQUIPMENT:

Digital Voltmeter	HP 3490A
Oscilloscope	HP 1740A
Time Mark Generator	HP 226A

Scans by ARTEK MEDIA =>

ADJUSTMENTS

5-21. SWEEP GENERATOR ADJUSTMENTS (Cont'd)

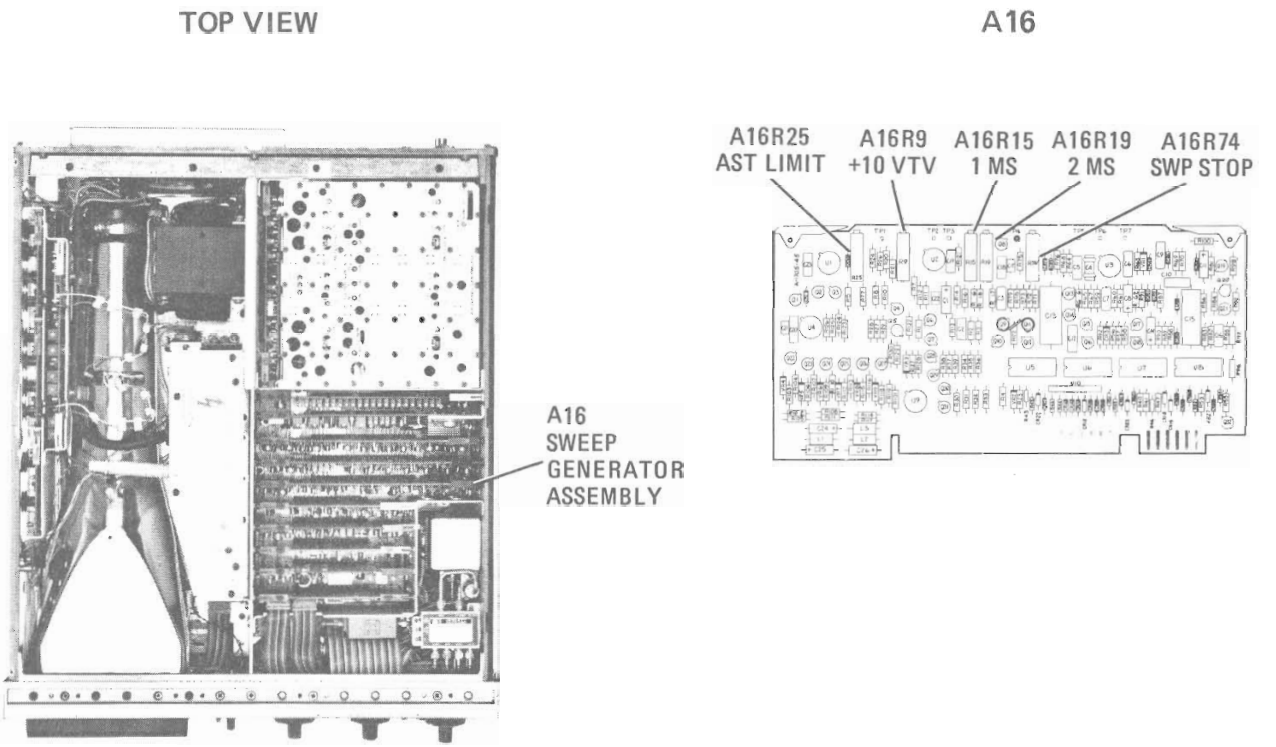

Figure 5-26. Sweep Generator Adjustment Locations

PROCEDURE:

a. Set LINE switch OFF, disconnect power cord, and remove 8565A top cover.

b. Reconnect power cord, set LINE switch ON, connect equipment as shown in Figure 5-25, and set 8565A controls as follows:

Set all Normal Settings (controls marked with green)

RESOLUTION BW	10 kHz
FREQUENCY SPAN/DIV	100 MHz
SWEEP TRIGGER	SINGLE

NOTE

+10VTV must be adjusted while the spectrum analyzer is still cold, during first five minutes of operation. If instrument has been operating, turn off spectrum analyzer and remove A16 Sweep Generator Assembly. Let A16 assembly cool off for 15 minutes. Replace A16 and proceed with adjustment of A16R9 +10VTV during first five minutes of operation.

Scans by ARTEK MEDIA =>

ADJUSTMENTS

5-21. SWEEP GENERATOR ADJUSTMENTS (Cont'd)

c. Connect digital voltmeter to A16TP3 +10VTV and use A16TP4 for return. Adjust A16R9 +10VTV for +10.00 volts ±0.01 volts.

d. Connect digital voltmeter to A16TP6 INT SWP and use A16TP4 for return. Check voltage at A16TP6 is −5.00V ± 0.02V. If not, perform +15 volt adjustment in Paragraph 5-12.

NOTE

Adjustment of A16R74 SWP STOP is performed by noting the sweep ramp voltage just prior to sweep retrace. A16R74 is then adjusted to trigger sweep retrace when the sweep ramp reaches +5 volts. To accurately determine sweep ramp voltage, slow sweep time per division by setting VIDEO FILTER to .003 when CRT trace is within one-half division of right graticule edge.

e. Depress START/RESET pushbutton to start trace sweep. When trace is within one-half division of right graticule edge, set VIDEO FILTER to .003. Note digital voltmeter indication just prior to sweep retrace (maximum positive sweep ramp voltage).

f. Adjust A16R74 SWP STOP for a maximum sweep ramp voltage (step e) of +5.00 volts ±0.01 volts. A clockwise adjustment of A16R74 will increase the sweep ramp voltage required to trigger retrace.

g. Set 8565A controls as follows:

Set all Normal Settings (controls marked with green)

FREQUENCY BAND GHz	.01 – 1.8
INPUT ATTEN	10 dB
REF LEVEL	10 dBm
REF LEVEL FINE	0
RESOLUTION BW	3 MHz
FREQUENCY SPAN/DIV	500 MHz
SWEEP TIME/DIV	1 mSEC

NOTE

The HP 1740A oscilloscope is externally swept by selecting A↑ ↳B sweep mode and connecting 8565A INT SWEEP OUT to oscilloscope Channel B input connector. Oscilloscope horizontal gain is adjusted with Channel B VOLTS/DIV control.

h. Externally sweep oscilloscope with rear panel INT SWEEP OUT and adjust oscilloscope horizontal gain for a ten division wide trace.

i. Set time mark generator for 1 millisecond marker output and display output on oscilloscope. Externally trigger spectrum analyzer with time marker generator.

j. Adjust spectrum analyzer TRIGGER LEVEL to set first peak on left edge of oscilloscope graticule display (Figure 5-27). Adjust A16R15 1 MS to set sixth peak on center graticule line.

Scans by ARTEK MEDIA =>

5-21. SWEEP GENERATOR ADJUSTMENTS (Cont'd)

k. Set spectrum analyzer SWEEP TIME/DIV to 2 mSEC and time mark generator output to 2 milliseconds.

l. Adjust spectrum analyzer TRIGGER LEVEL to set first peak on left edge of oscilloscope graticule display. Adjust A16R19 2 MS to set sixth peak on center graticule line. Repeat steps i through l until no further adjustment is necessary.

m. Set spectrum analyzer SWEEP TIME/DIV to AUTO and time mark generator output to 50 milliseconds.

n. Adjust spectrum analyzer TRIGGER LEVEL to set first peak on left edge of graticule display. Adjust A16R25 AST LIMIT to set fifth peak on right edge of graticule display.

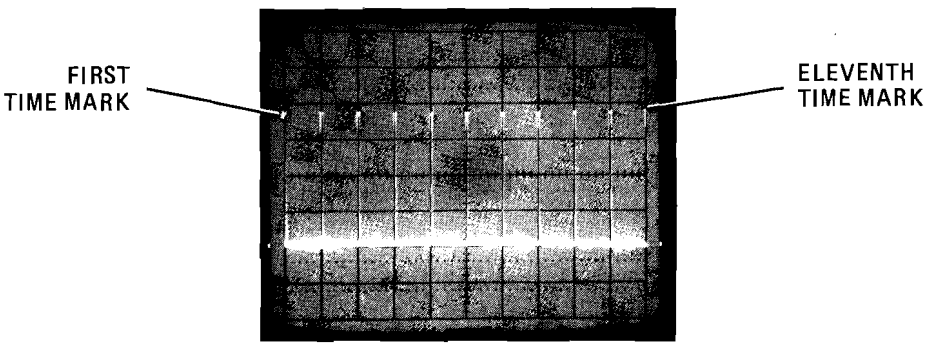

Figure 5-27. Time Mark Oscilloscope Display

o. Adjustment complete. Set LINE switch OFF, disconnect power cord and install 8565A top cover.

5-22. DIGITAL READOUT AND FIRST L.O. ADJUSTMENTS

REFERENCE:

Service Sheets 12, 14, 17, and 35

Scans by ARTEK MEDIA =>

ADJUSTMENTS

5-22. DIGITAL READOUT AND FIRST L.O. ADJUSTMENTS (Cont'd)

DESCRIPTION:

Adjustment of the A17 Frequency Control Assembly + 10 volt reference supply is performed and offset in the center frequency output (to A12 DVM Analog Assembly) is adjusted for a null. The A12 DVM Analog Assembly is then adjusted to give a calibrated front panel CENTER FREQUENCY digital readout. The YIG Tuned Oscillator (YTO) output frequency is calibrated by supplying a known tuning voltge and adjusting YTO offset and gain adjustments for the correct 1st Local Oscillator output frequency. The YIG Tuned Filter (YTF) offset and gain adjustments are performed to center the YTF bandpass coincident with the YTO frequency.

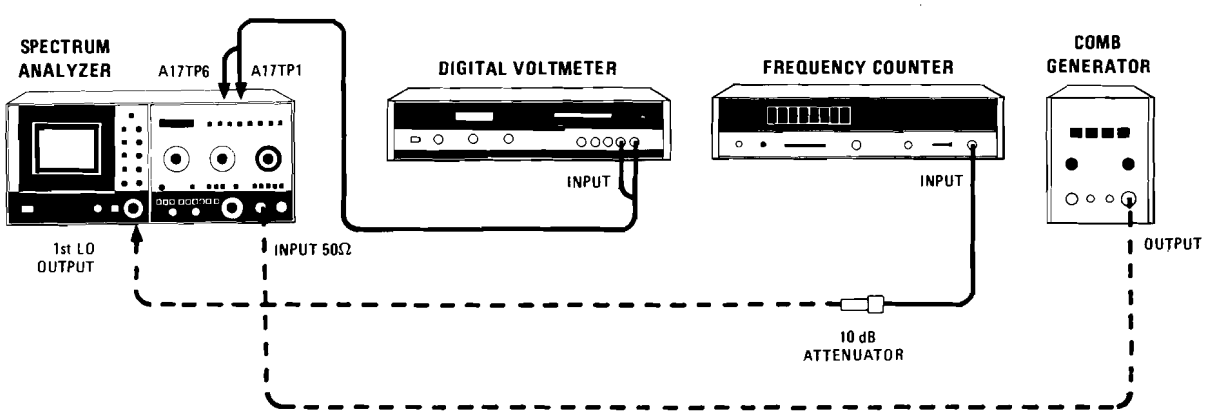

Figure 5-28. Digital Readout and First L.O. Adjustment Test Setup

EQUIPMENT:

Digital Voltmeter	HP 3490A
Frequency Counter	HP 5340A
Comb Generator	HP 8406A
10 dB Attenuator	HP 8491B Option 010

Scans by ARTEK MEDIA =>

ADJUSTMENTS

5-22. DIGITAL READOUT AND FIRST L.O. ADJUSTMENTS (Cont'd)

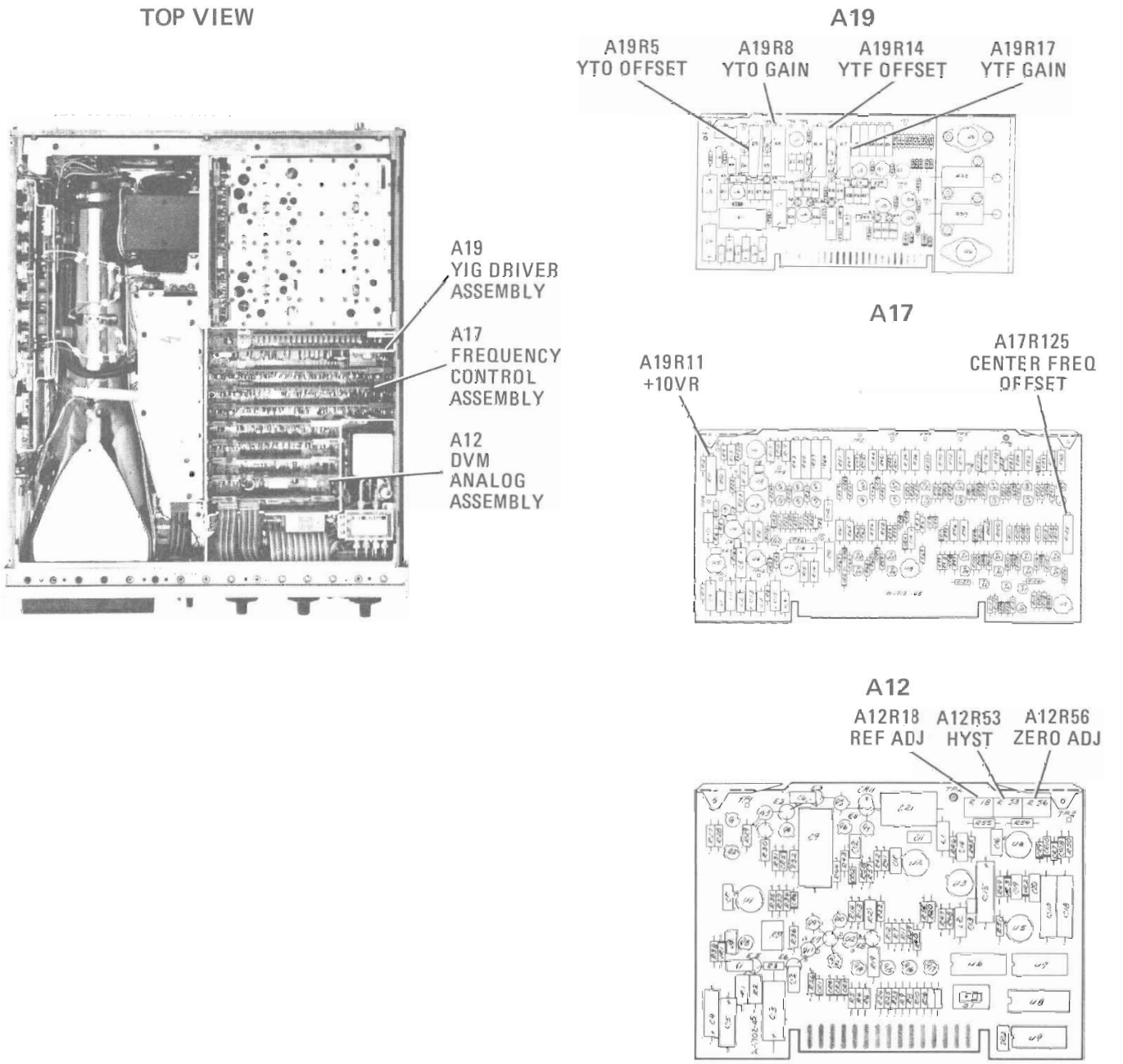

Figure 5-29. Digital Readout and First L.O. Adjustment Locations

PROCEDURE:

a. Set LINE switch OFF, disconnect power cord, and remove 8565A top cover.

Scans by ARTEK MEDIA =>

ADJUSTMENTS

5-22. DIGITAL READOUT AND FIRST L.O. ADJUSTMENTS (Cont'd)

b. Reconnect power cord, set LINE switch ON and set 8565A controls as follows:

Set all Normal Settings (controls marked with green)

FREQUENCY BAND GHz	.01 – 1.8
INPUT ATTEN	10 dB
REF LEVEL	– 10 dBm
REF LEVEL FINE	0
RESOLUTION BW	1 MHz
FREQUENCY SPAN/DIV	50 MHz
AUTO STABILIZER	OFF

NOTE

For all digital voltmeter measurements, use A17TP6 ▽2 for return.

c. Connect digital voltmeter to A17TP1 +10VR and adjust A17R11 +10VR for +10.0000V ± 0.0002V.

d. Jumper A17TP5 CENT FREQ to A17TP8 and connect digital voltmeter to A17TP5 CENT FREQ.

e. Adjust A17R125 CENTER FREQ OFFSET for a digital voltmeter reading of 0.0000V ± 0.0002V.

f. Disconnect jumper between A17TP5 CENT FREQ and A17TP8.

g. Adjust front panel TUNING control for a 0.000V ± 0.0001V digital voltmeter reading at A17TP5 CENT FREQ.

h. Adjust A12R56 ZERO ADJ for a flickering minus sign on the front panel CENTER FREQUENCY digital readout.

i. Adjust TUNING control for a 0.0005V ± 0.0001V digital voltmeter reading at A17TP5 CENT FREQ.

j. Adjust A12R53 HYST for a CENTER FEQUENCY display changing between 0.000 GHz and 0.001 GHz.

k. Switch FREQUENCY BAND to 8.5 — 18 GHz and adjust front panel TUNING control for 10.0000V ± 0.0002V at A17TP5 CENT FREQ.

l. Adjust A12R18 REF ADJ for a CENTER FREQUENCY display of 10.000 GHz.

m. Adjust A39R40 DIG INT for equal intensity of digits and annunciators on bezel digital readout display.

n. Connect frequency counter through a 10 dB attenuator to rear panel 1ST LO OUTPUT connector. Set FREQUENCY BAND to 1.7 — 4.1 GHz and FREQUENCY SPAN MODE to ZERO SPAN. Remove A14 Tuning Stabilizer Control Assembly.

Scans by ARTEK MEDIA =>

ADJUSTMENTS

5-22. DIGITAL READOUT AND FIRST L.O. ADJUSTMENTS (Cont'd)

o. Connect digital voltmeter to A17TP3 YTO FA and adjust front panel TUNING control for −10.2500V ± 0.0005V.

p. Adjust A19R5 YTO OFFSET for a frequency counter reading of 2.050 GHz ± 0.0002 GHz.

q. Adjust front panel TUNING control for −22.000V ± 0.001V at A17TP3 YTO FA.

r. Adjust A19R8 YTO GAIN for a frequency counter reading of 4.400 GHz ± 0.001 GHz.

s. Adjust front panel TUNING control for −10.2500V ± 0.005V at A17TP3 YTO FA and check frequency at 1ST LO OUTPUT. Frequency should be 2.050 GHz ± 0.001 GHz. If not within tolerance, repeat steps p through r.

t. Install 50-ohm load on rear panel 1ST LO OUTPUT connector, connect 100 MHz comb generator output to front panel INPUT 50Ω, and set 8565A controls as follows:

Set all Normal Settings (controls marked with green)

FREQUENCY BAND GHz	1.7 – 4.1
CENTER FREQUENCY	2.000 GHz
RESOLUTION BW	3 MHz
FREQUENCY SPAN/DIV	200 MHz
FREQUENCY SPAN MODE	ZERO SPAN
AUTO STABILIZER	OFF
VIDEO FILTER	.3

NOTE

The following procedure is a preliminary YTF tracking check and adjustment. If a tracking adjustment is required, perform adjustments in Paragraph 5-26 YTF Tracking Adjustments.

u. Set A19S1 YTF TRACK switch to TEST and ensure front panel PRESELECTOR PEAK control is set to center of green area.

v. Adjust front panel TUNING control to peak signal on CRT display. Remove hysterisis by switching to FULL BAND then back to ZERO SPAN (FREQUENCY SPAN MODE) and repeak signal on CRT display.

w. Adjust A19R14 YTF OFFSET to center passband on CRT display (Figure 5-30).

x. Tune spectrum analyzer to 4.1 GHz and peak signal on CRT display. Remove hysterisis by switching to FULL BAND then back to ZERO SPAN (FREQUENCY SPAN MODE) and repeak signal on CRT display.

y. Adjust A19R17 YTF GAIN to center passband on CRT display (Figure 5-30).

z. Set A19S1 YTF TRACK switch to NORM. Set LINE switch OFF, disconnect power cord, and install A14 Tuning Stabilizer Control Assembly. Install 8565A top cover.

Scans by ARTEK MEDIA =>

5-22. DIGITAL READOUT AND FIRST L.O. ADJUSTMENTS (Cont'd)

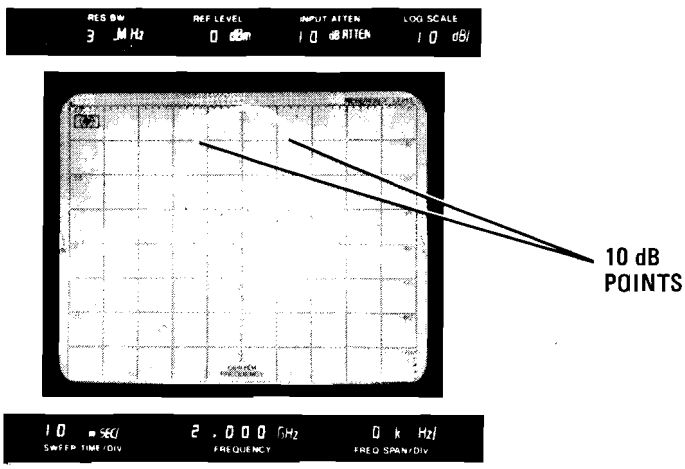

Figure 5-30. YTF Passband Display

5-23. SECOND AND THIRD CONVERTER ADJUSTMENTS

REFERENCE:

Service Sheets 7 and 8

DESCRIPTION:

The second converter L.O. is adjusted for 1728.60 MHz and the second converter bandpass filter is adjusted for a 2050 MHz bandpass. If the second converter bandpass filter requires significant frequency tuning for correct bandpass adjustment, then the coarse bandpass adjustment must be performed to ensure correct second converter bandpass alignment. Once the second converter bandpass filter is tuned to 2050 MHz, adjustments are performed for compromise of best bandpass shape and minimum conversion loss. The third converter L.O. is adjusted for maximum output power and the front panel CAL OUTPUT is calibrated for −10 dBm. A spectrum analyzer is used to display the 300 MHz local oscillator signal at the 21.4 MHz output port, and the 300 MHz bandpass filter is adjusted for maximum 300 MHz local oscillator signal. The 321.4 MHz bandpass filter is checked with an oscilloscope. If the resonant cavities are not closely tuned to 321.4 MHz, the bandpass filter must be detuned and each cavity tuned to 321.4 MHz.

Scans by ARTEK MEDIA =>

ADJUSTMENTS

5-23. SECOND AND THIRD CONVERTER ADJUSTMENTS (Cont'd)

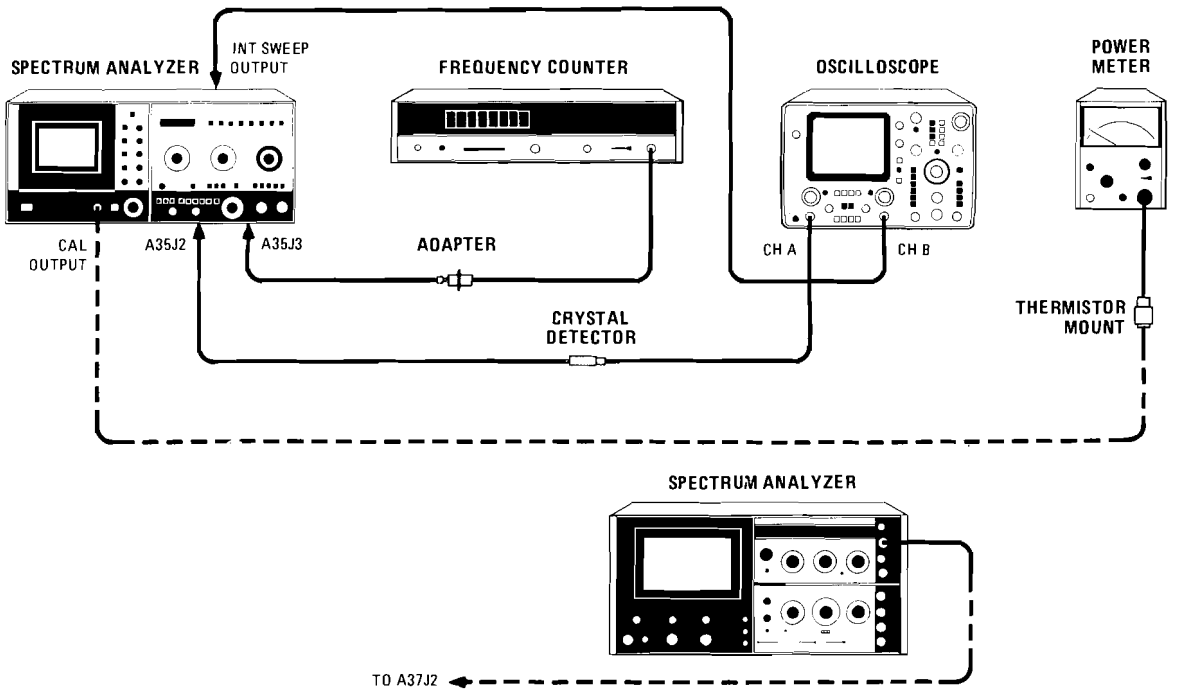

Figure 5-31. Second and Third Converter Adjustment Test Setup

EQUIPMENT:

Frequency Counter	HP 5340A
Oscilloscope	HP 1740A
Spectrum Analyzer	HP 140T/8552B/8554B
Power Meter	HP 432A
Thermistor Mount	HP 8478B
Crystal Detector	HP 33330C
Adapter, BNC female to SMC female (modified)	HP Part No. 08565-60087

Scans by ARTEK MEDIA =>

ADJUSTMENTS

5-23. SECOND AND THIRD CONVERTER ADJUSTMENTS (Cont'd)

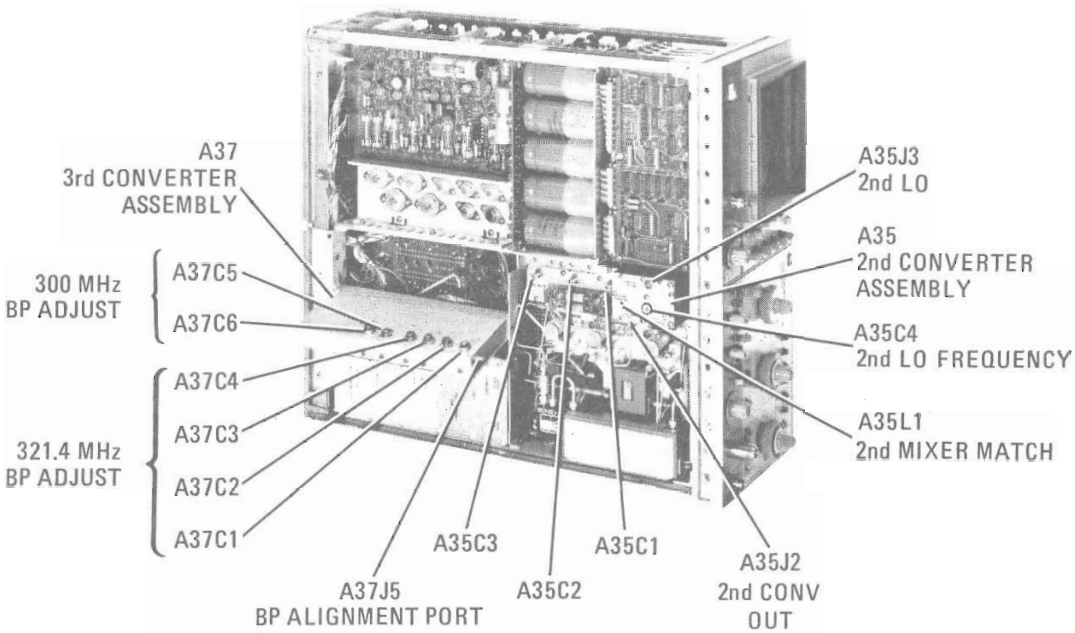

Figure 5-32. Second and Third Converter Adjustment Locations

PROCEDURE:

a. Set LINE switch OFF, disconnect power cord, and remove 8565A top and bottom covers.

b. Reconnect power cord, set LINE switch ON, and set 8565A controls as follows:

Set all Normal Settings (controls marked with green)
FREQUENCY BAND GHz ..... .01 – 1.8
FREQUENCY ..... 0.050 GHz
BW RESOLUTION ..... 10 kHz
FREQ SPAN/DIV ..... .2 MHz
SWEEP SOURCE ..... EXT

c. Connect frequency counter through modified adapter (HP Part No. 08565-60087) to A35J3 2ND LO and adjust A35C4 2ND LO FREQUENCY for 1728.60 MHz ±0.1 MHz.

d. Disconnect frequency counter, set 8565A SWEEP SOURCE to INT, and use TUNING control to center L.O. signal (0.000 GHz) on CRT display.

e. Remove error due to hysterisis by switching FREQ SPAN MODE to FULL BAND then back to PER DIV. Recenter L.O. signal on CRT display.

Scans by ARTEK MEDIA =>

5-23. SECOND AND THIRD CONVERTER ADJUSTMENTS (Cont'd)

f. Externally sweep oscilloscope with spectrum analyzer SWEEP OUT and set oscilloscope for a dc coupled input. Disconnect W18 from A35J2 2ND CONV OUT and connect oscilloscope through a crystal detector to A35J2 2ND CONV OUT.

g. Set FREQ SPAN/DIV to 5 MHz and check second converter bandpass display on oscilloscope CRT (Figure 5-33). If center of second converter bandpass is within two divisions of being centered on oscilloscope display, proceed to Second Converter Fine Bandpass Adjustment (step h).

If center of bandpass is greater than two divisions from center of oscilloscope display, perform second converter coarse bandpass adjustment as follows:

1. Set FREQ SPAN/DIV to 50 MHz and loosen lock nut on A35C2 and A35C3. Carefully turn tuning screws clockwise until they bottom on cavity.

2. Turn A35C2 and A35C3 one turn counterclockwise and tighten lock nuts lightly.

3. Tune A35C2 to center second converter bandpass on oscilloscope display.

4. Set FREQ SPAN/DIV to 5 MHz and adjust A35C3 for maximum signal (negative) with a bandpass approximately two to four divisions wide.

5. Adjust A35C1, A35C2 and A35C3 for a centered bandpass display with compromise of maximum amplitude and widest bandpass.

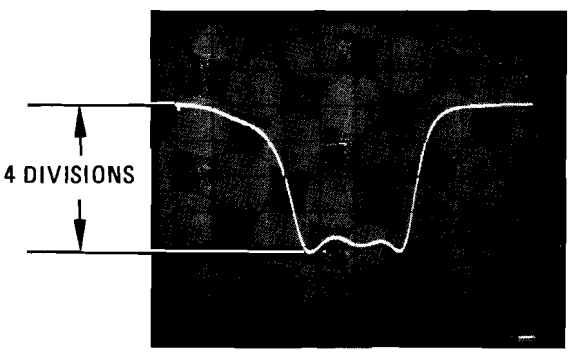

Figure 5-33. Second Converter Bandpass Display

Scans by ARTEK MEDIA =>

5-23. SECOND AND THIRD CONVERTER ADJUSTMENTS (Cont'd)

h. Adjust A35L1, A35C1, A35C2 and A35C3 for a centered and symmetrical bandpass display as shown in Figure 5-33.

i. Set FREQ SPAN/DIV to 1 MHz and adjust oscilloscope vertical gain for a four division peak-to-peak display.

j. Check flatness of bandpass 3 MHz (3 divisions) each side of center. Bandpass should be flat within +0.5 and −0.4 divisions (±1 dB).

k. Connect oscilloscope (through crystal detector) to A37J3 100 MHz TEST. Adjust A37A3L4 OSC PEAK for maximum negative level. Disconnect oscilloscope

l. Connect power meter to front panel CAL OUTPUT connector. Adjust A37A3R27 CAL OUT LEVEL for −10 dBm. Disconnect power meter.

m. Disconnect W22 from A37J2 21.4 MHz OUT and connect test spectrum analyzer to A37J2 21.4 MHz OUT.

n. Tune test spectrum analyzer to display 300 MHz local oscillator signal.

o. Tune A37C5 and A37C6 300 MHz BP ADJUST for maximum 300 MHz signal.

p. Disconnect test specturm analyzer and reconnect W22 to A37J22 21.4 MHz OUT.

q. Set 8765A FREQ SPAN/DIV to 5 MHz (RESOLUTION BW 100 kHz) and use TUNING control to center L.O. signal (0.000 GHz) on CRT display

r. Connect oscilloscope through crystal detector to A37J5 BP FILTER ALIGNMENT connector. Externally sweep oscilloscope with spectrum analyzer SWEEP OUT.

NOTE

This procedure uses a negative polarity crystal detector. If a positive polarity crystal detector is used the waveforms in Figure 5-34 will be inverted.

s. Check oscilloscope display is symmetrical as shown in Figure 5-34d. If not, perform 321.4 MHz coarse bandpass adjustment as follows:

1. Loosen lock nuts on A37C2, A37C3, and A37C4. Carefully turn tuning screws clockwise until they bottom on cavity.

2. Adjust A37C1 for a dip at center of oscilloscope display (Figure 5-34a).

3. Adjust A37C2 for a peak at center of oscilloscope display as shown in Figure 5-34b.

4. Adjust A37C3 for dip at center of oscilloscope display as shown in Figure 5-34c.

5. Adjust A37C4 for peak at center of oscilloscope display as shown in Figure 5-34d.

Scans by ARTEK MEDIA =>

5-23. SECOND AND THIRD CONVERTER ADJUSTMENTS (Cont'd)

t. Connect 100 MHz CAL OUTPUT signal to INPUT 50Ω and set 8565A controls as follows:

RESOLUTION BW ..... 3 MHz
FREQ SPAN/DIV ..... 2 MHz
FREQUENCY ..... 0.100 GHz

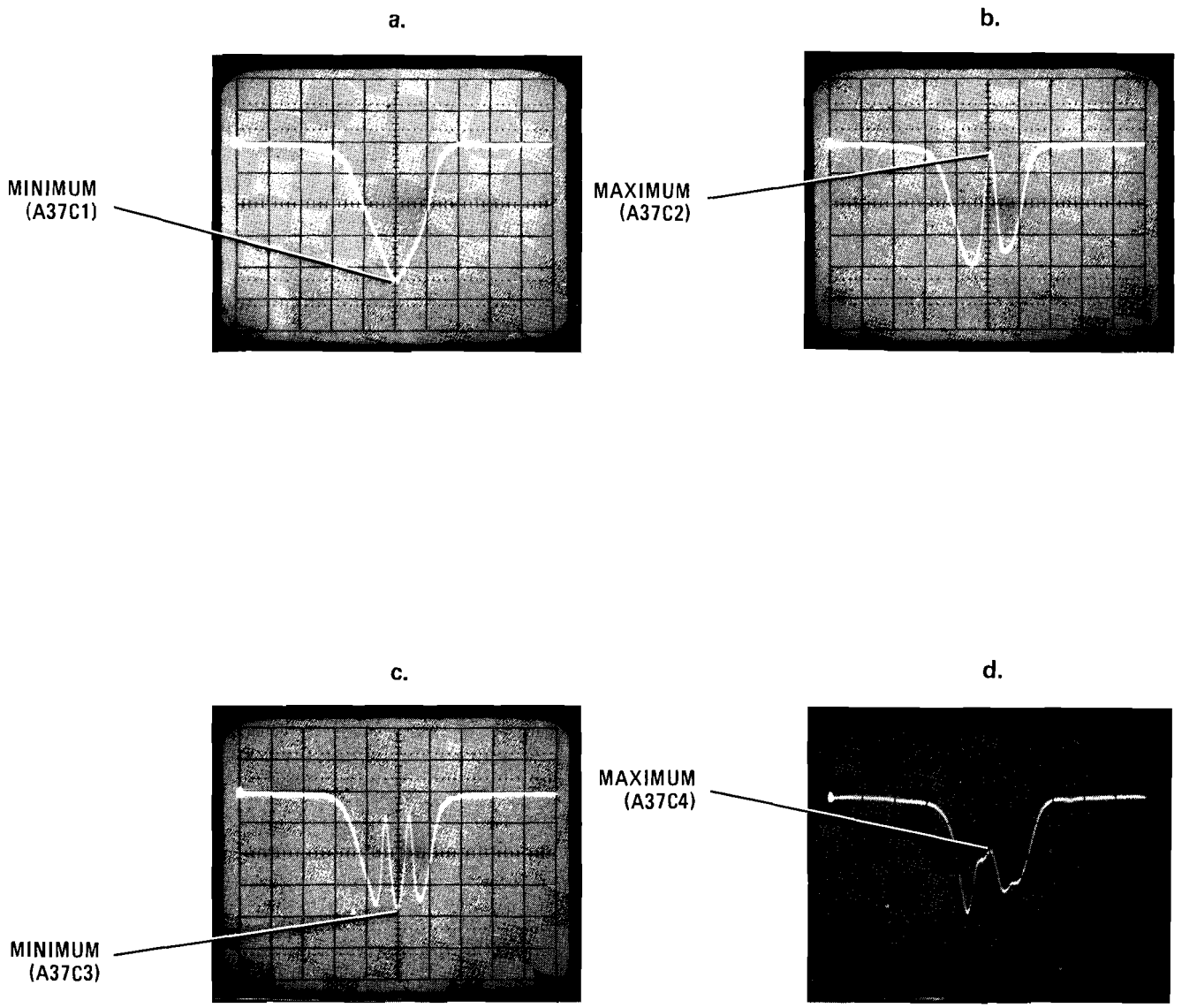

Figure 5-34. 321.4 MHz Bandpass Filter Alignment Oscilloscope Display

Scans by ARTEK MEDIA =>

ADJUSTMENTS

5-23. SECOND AND THIRD CONVERTER ADJUSTMENTS (Cont'd)

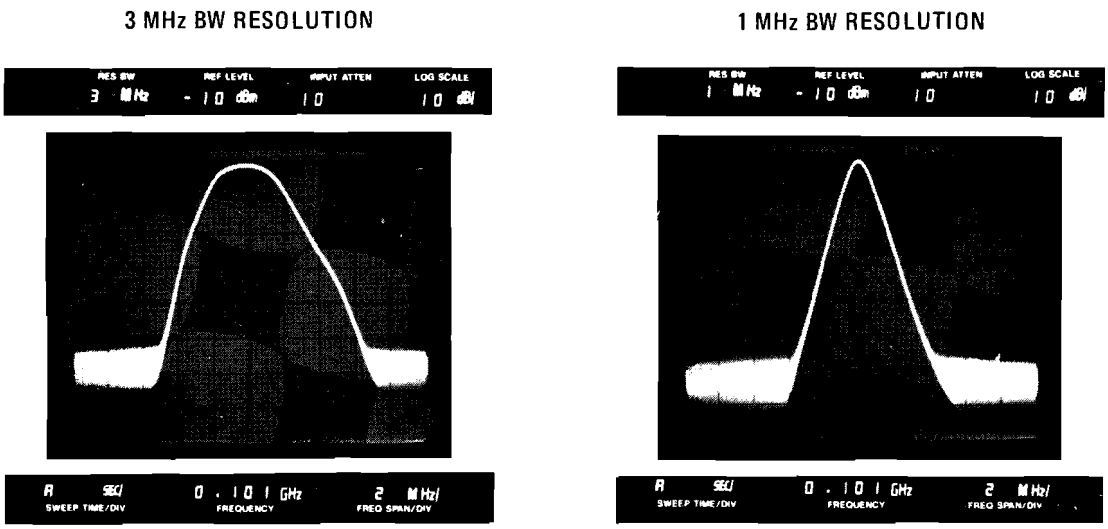

Figure 5-35. 321.4 MHz Bandpass Filter Alignment Spectrum Analyzer Display

u. Adjust A37C1 through A37C4 321.4 BP ADJUST for most symmetrical and centered bandpass display on spectrum analyzer CRT display (Figure 5-35).

v. Set 8565A RESOLUTION BW to 1 MHz and check for symmetrical and centered bandpass display as shown in Figure 5-35.

w. Adjust A37C1 through A37C4 for best overall symmetry and centering of bandpass display in 3 MHz and 1 MHz resolution bandwidths.

x. Check spectrum analyzer bandwidth for 3 MHz RESOLUTION BW positions as shown in Table 5-11. If 3 MHz bandwidth is narrow, adjust A21R77 3 MHz according to adjustment procedure 5-19 Bandwidth Filter Adjustment, steps v and w.

Table 5-11. 3 MHz Bandwidth

BW RESOLUTION	AMPLITUDE SCALE	Below Peak	Bandwidth
3 MHz	1 dB	3 dB	3 MHz ±.45 MHz
3 MHz	10 dB	60 dB	⩽45 MHz

y. Adjustment complete. Set LINE switch OFF, disconnect power cord, and install 8565A top and bottom covers.

Scans by ARTEK MEDIA =>

5-24. TUNING STABILIZER ADJUSTMENTS

REFERENCE:

Service Sheets 15 and 16

DESCRIPTION:

The A14 Tuning Stabilizer Control assembly adjustments are performed to set up the correct sweep voltages for the YTO tickler coil and Voltage Controlled Crystal Oscillator (VCXO). A14R68 FET OFFSET is adjusted to provide a zero level output to the tuning stabilizer with the spectrum analyzer operating in zero span mode and a zero volt input from front panel FINE TUNING control. A 50 MHz signal with 100 kHz frequency modulation is displayed on the spectrum analyzer and A14R71 TICK SWEEP is adjusted for a modulation peak occuring every division (FREQ SPAN/DIV set to 100 kHz). The spectrum analyzer is then stabilized and A14R57 VCXO SWP is adjusted for the same sweep display as the TICK SWEEP adjustment. The VCXO is then checked for linearity. The VCXO ERROR OUT signal is monitored, and if the variation of the signal is within limits, no adjustments to the VCXO are necessary. If the error signal is out of tolerance, perform the adjustments in the order given. Small adjustments should be made and the AUTO STABILIZER switched OFF then on after each adjustment to remove the dc component introduced by the adjustment.

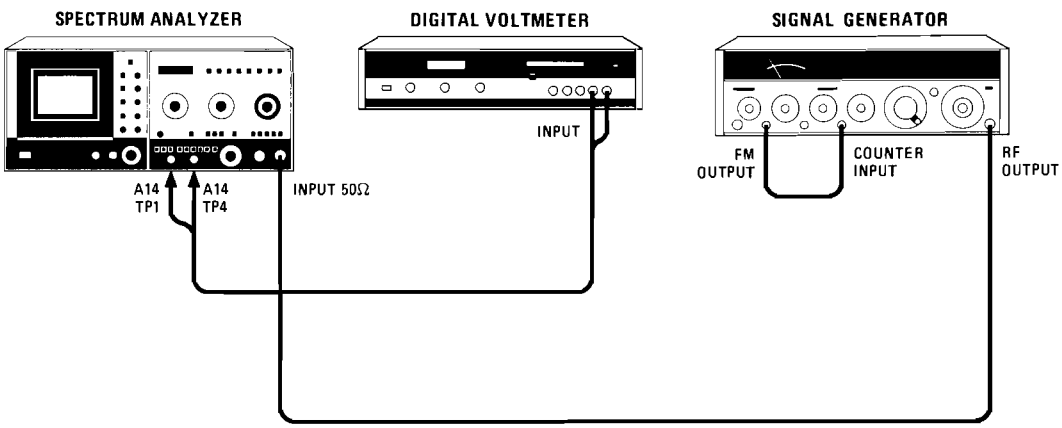

Figure 5-36. Tuning Stabilizer Control Adjustment Test Setup

EQUIPMENT:

Signal Generator	HP 8640B Option 001
Digital Voltmeter	HP 3490A
Oscilloscope	HP 1740A
10:1 Probe	HP 10004D
1:1 Probe	HP 10007D
BNC Tee	HP Part No. 1250-0781

Scans by ARTEK MEDIA =>

ADJUSTMENTS

5-24. TUNING STABILIZER ADJUSTMENTS (Cont'd)

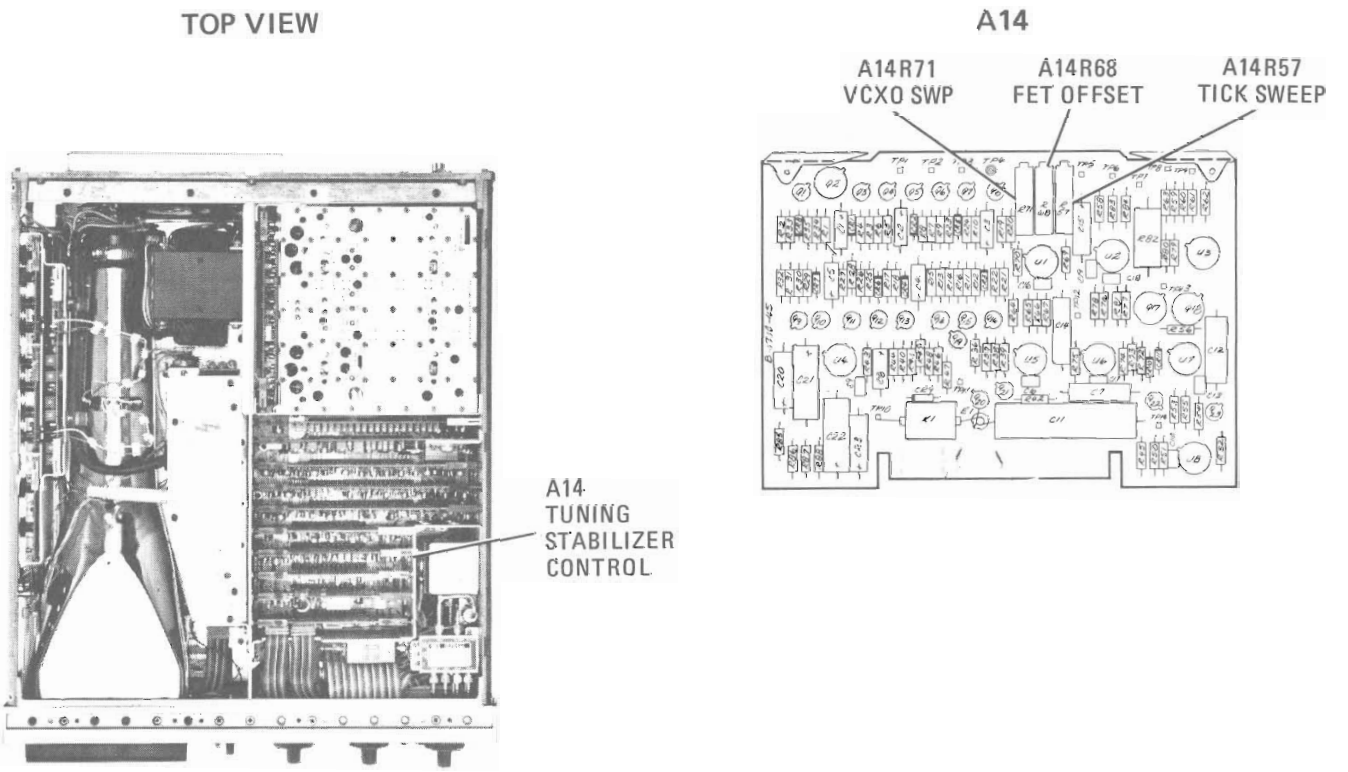

Figure 5-37. Tuning Stabilizer Control Adjustment Locations

PROCEDURE:

a. Set LINE switch OFF, disconnect power cord, and remove 8565A top and bottom covers.

b. Reconnect power cord, set LINE switch ON, and connect equipment as shown in Figure 5-36.

c. Set controls as follows:

8565A:
Set all Normal Settings (controls marked with green)

FREQUENCY BAND GHz	.01 – 1.8
RESOLUTION BW (Coupled)	10 kHz
FREQ SPAN/DIV	100 kHz
INPUT ATTEN	10 dB
REF LEVEL	0 dBm
REF LEVEL FINE	0
FREQUENCY SPAN MODE	ZERO SPAN
AUTO STABILIZER	OFF

Scans by ARTEK MEDIA =>

ADJUSTMENTS

5-24. TUNING STABILIZER ADJUSTMENTS (Cont'd)

Signal Generator:
- Output Level ..... −20 dBm
- Frequency ..... 50 MHz
- Modulation Frequency ..... 100 kHz
- Modulation ..... FM
- Peak Deviation ..... 300 kHz
- FM ..... OFF

d. Connect digital voltmeter across A14TP1 TICK S + T (high DVM input) and A14TP4 ▽2▽ (low DVM input).

e. Adjust FINE TUNING control for a digital voltmeter reading of 0 volts ±0.01 volts.

f. Connect digital voltmeter high input to A14TP3 VCXO SWP and adjust A14R68 FET OFF for 0.00 volts ±0.01 volts.

g. Set FREQUENCY SPAN MODE to PER DIV and connect signal generator output to spectrum analyzer INPUT 50Ω.

h. Center 50 MHz carrier frequency on spectrum analyzer CRT display, set 8640B FM switch to INT and adjust signal generator peak deviation for uniform amplitude of 100 kHz modulation peaks (Figure 5-38).

i. Adjust A14R57 TICK SWP for one division spacing between modulation peaks (use FINE TUNING control to align peaks on graticule line).

j. Set FINE TUNING control to midrange and activate tuning stabilizer (AUTO STABILIZER push-button out).

k. Adjust A14R71 VCXO SWP for one division spacing between modulation peaks (use FINE TUNING control to align peaks on graticule line).

l. Set FREQ SPAN/DIV control to 20 kHz (RESOLUTION BW 3 kHz) and note 5 division spacing between modulation peaks.

NOTE

Adjust signal generator carrier frequency (50 MHz) to set modulation peaks on gratiucle lines.

m. Check 5 division spacing between modulation peaks with FINE TUNING control set at fully counterclockwise, midrange, and fully clockwise positions. Adjust A14R71 VCXO SWP for best compromise of 5 division spacing over the full range of FINE TUNING control.

Scans by ARTEK MEDIA =>

ADJUSTMENTS

5-24. TUNING STABILIZER ADJUSTMENTS (Cont'd)

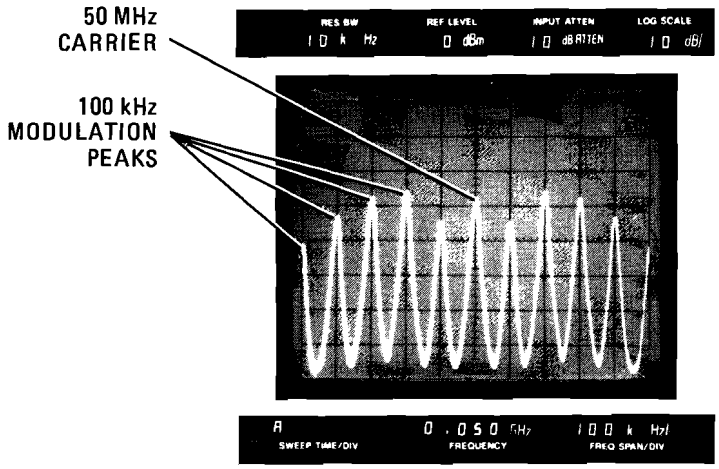

Figure 5-38. Spectrum Analyzer Display with 100 kHz FM

n. Disconnect signal generator output from spectrum analyzer INPUT 50Ω. Simultaneously depress INT and EXT SWEEP SOURCE pushbuttons to obtain a dot on CRT display. Adjust front panel HORIZ POSN to position dot on center vertical graticule line.

o. Depress INT SWEEP SOURCE pushbutton to obtain swept CRT trace. Set FREQUENCY SPAN/DIV to 2 MHz (RESOLUTION BW 100 kHz). Connect 100 MHz CAL OUTPUT signal to INPUT 50Ω and adjust TUNING control to center 100 MHz signal on CRT display.

p. Switch FREQUENCY SPAN/DIV to 5 MHz and adjust A15R53 MAIN SWP OFFSET to center 100 MHz signal on CRT display.

Tuning Stabilizer VCXO Linearity Check and adjustment

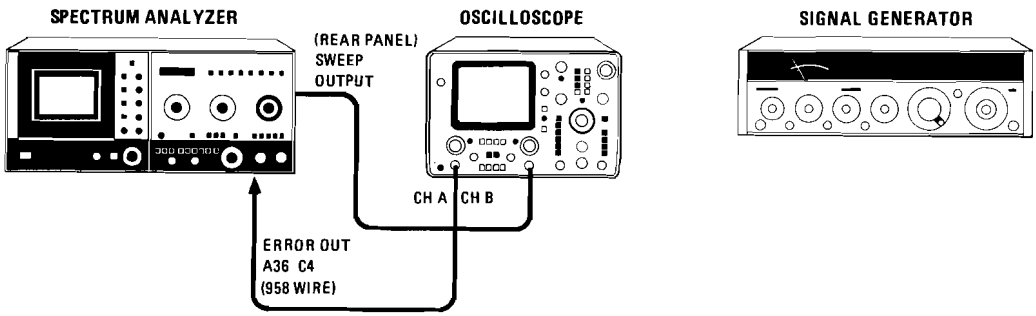

Figure 5-39. Tuning Stabilizer VCXO Check and Adjustment Test Setup

Scans by ARTEK MEDIA =>

ADJUSTMENTS

5-24. TUNING STABILIZER ADJUSTMENTS (Cont'd)

BOTTOM VIEW

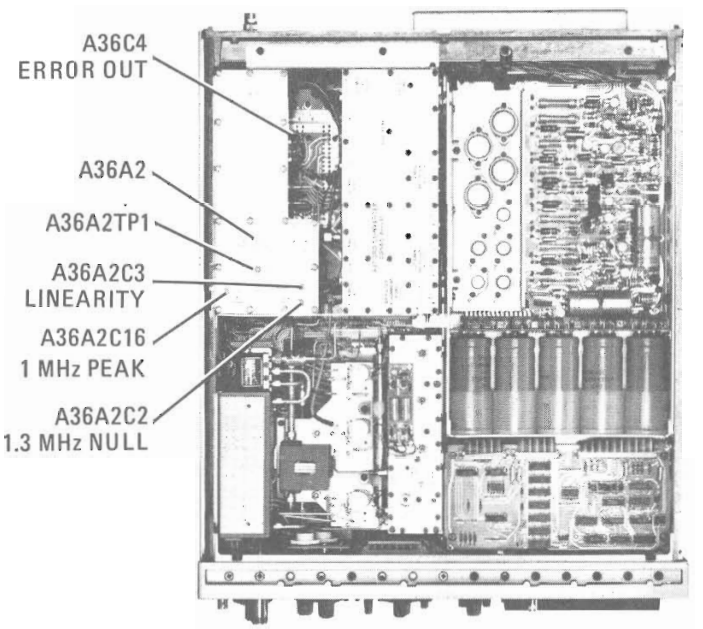

Figure 5-40. Tuning Stabilizer VCXO Adjustment Locations

q. Connect equipment as shown in Figure 5-39 and set oscilloscope for an externally swept (A B) dc coupled 10 mV/division display. Set 8565A controsl as follows:

Set all Normal Settings (controls marked with green)

FREQUENCY BAND GHz	.01 – 1.8
FREQUENCY	0 MHz
RESOLUTION BW (coupled)	10 kHz
FREQ SPAN/DIV	100 kHz
FREQUENCY SPAN MODE	PER DIV
FINE TUNING control	midrange
AUTO STABILIZER	on (out)

r. Momentarily switch AUTO STABILIZER to OFF to remove dc component on ERROR OUT signal. Center oscilloscope trace with osilloscope positon controls.

s. Check slope of oscilloscope trace. The trace should not change more than one-half vertical division (5 mV) for every horizontal division swept.

Scans by ARTEK MEDIA =>

5-24. TUNING STABILIZER ADJUSTMENTS (Cont'd)

t. Adjust FINE TUNING control over its three turn range while observing the oscilloscope trace. The trace should not change more than one-half vertical division (5 mV) for every horizontal divison swept.

NOTE

If slope of oscilloscope trace is within tolerance, no further adjustment is necessary.

u. If slope of oscilloscope trace is out of tolerance, set up oscilloscope for internal sweep and set 8565A FREQUENCY SPAN MODE to ZERO SPAN and AUTO STABILIZER pushbutton to OFF.

v. Remove A36A2 cover plate (Figure 5-40) for access to test points and center A36A2C3 LINEARITY.

w. Connect 1.3 MHz 3 volt peak-to-peak signal from signal generator through a 1:1 probe to A36A2TP3 (connect ground clip to chassis ground).

x. Connect oscilloscope through 10:1 probe to A36A2TP1 and adjust A36A2C2 1.3 MHz NULL for minimum 1.3 MHz signal. Disconnect signal generator from A36A2TP3.

y. Connect oscilloscope through 10:1 probe to A36A2TP2 and adjust A36A2C16 1 MHz PEAK for maximum 1 MHz signal.

z. Reinstall A36A2 cover plate and repeat steps o through t. If slope of oscilloscope trace is out of tolerance (steps s and t) make adjustments as follows:

NOTE

Do each of the following adjustments in small steps and switch AUTO STABILIZER OFF then ON after each adjustment.

1. Adjust A36A2C3 LINEARITY and A36A2C16 1 MHz PEAK for minimum slope of oscilloscope trace.

2. Check slope of oscilloscope trace while adjusting FINE TUNING control over its three turn range. Oscilloscope trace should not change more than one-half vertical divison (5 mV) per horizontal division swept.

3. Repeat steps z-1 and z-2 until no further adjustment is necessary.

aa. Check Tuning Stabilizer Control Adjustments (steps c through m). If adjustments are performed, repeat steps q through t to check VCXO linearity.

bb. Adjustment complete. Set LINE switch OFF, disconnect power cord, and install 8565A top and bottom covers.

Scans by ARTEK MEDIA =>

ADJUSTMENTS

5-25. PRELIMINARY BIAS ADJUSTMENT

REFERENCE:

Service Sheet 19

DESCRIPTION:

NOTE

This is a preliminary adjustment and requires the YTF Tracking Adjustment (5-26) and Frequency Response Adjustment (5-27) also be performed.

A synchronizer and sweep oscillator are connected to make a tracking generator for the 8565A. The sweep oscillator is phaselocked on each FREQUENCY BAND checked, and mixer bias adjustments are performed for minimum amplitude variation across the FREQUENCY BAND.

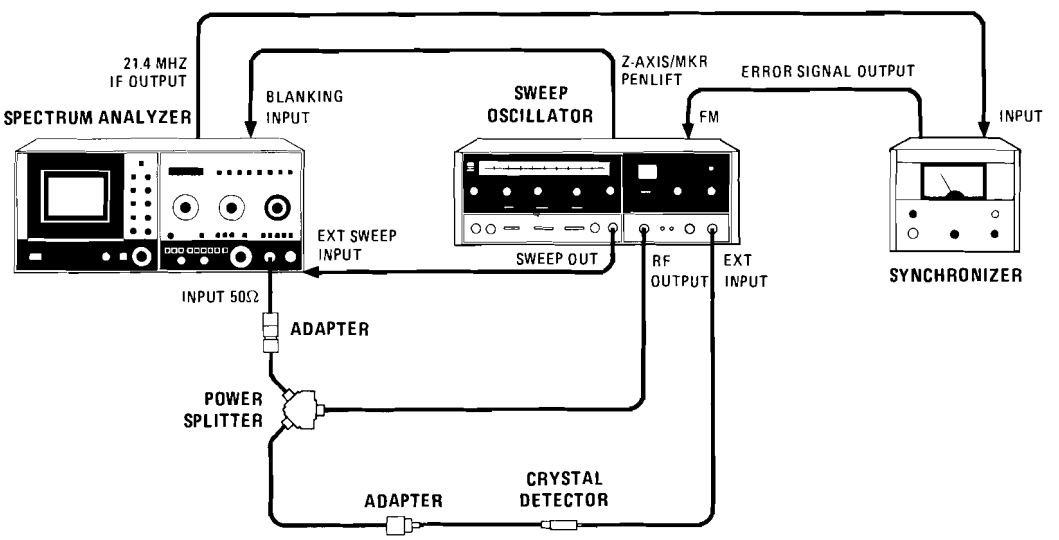

Figure 5-41. Preliminary Bias Adjustment Test Setup (1 of 2)

Scans by ARTEK MEDIA =>

ADJUSTMENTS

5-25. PRELIMINARY BIAS ADJUSTMENT (Cont'd)

EQUIPMENT:

Sweep oscillator	HP 8620C/86290A-H08
Synchronizer	HP 8709A-H10
Power Splitter	HP 11667A Option 002
Crystal Detector	HP 33330C
Adapter, APC-7 to Type N Male	HP 11525A
Adapter, apc-7 to SMA Female	HP 11534A

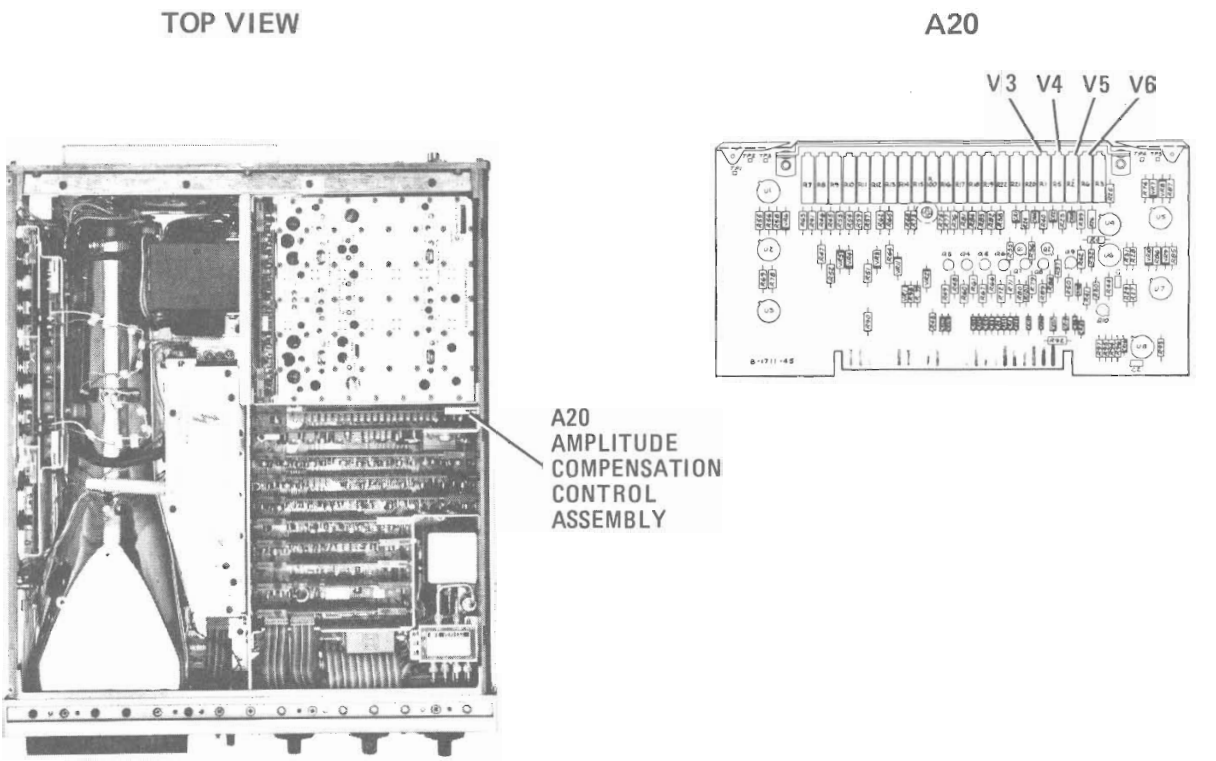

Figure 5-42. Preliminary Bias Adjustment Locations

Scans by ARTEK MEDIA =>

5-25. PRELIMINARY BIAS ADJUSTMENT (Cont'd)

PROCEDURE:

a. Set LINE switch OFF disconnect power cord, and remove 8565A top cover.

b. Reconnect power cord, set LINE switch ON, connect equipment as shown in Figure 5-41, and set controls as follows:

8565A:
Set all Normal Settings (controls marked with green)

FREQUENCY BAND GHz	5.8 – 12.9
INPUT ATTEN	10 dB
REF LEVEL	0 dBm
REF LEVEL FINE	–4
FREQUENCY SPAN MODE	FULL BAND
AMPLITUDE SCALE	5 dB (LOG/DIV)
SWEEP SOURCE	EXT
PRESELECTOR PEAK	Centered in green

8620C/86290A-H08:

BAND	Band 4
MARKER SWEEP pushbutton	Depress
START MARKER pointer	5.8 GHz
STOP MARKER pointer	12.9 GHz
SWEEP TIME-SECONDS	.1 — .01
SWEEP TIME-SECONDS vernier	Fully counterclockwise
RF OFF-ON	ON
ALC switch	EXT
POWER LEVEL	Midrange
RF BLANKING/OFF	RF BLANKING
DISPLAY BLANKING/OFF	DISPLAY BLANKING
FM-NORM-PL	PL

c. Set A28S1 NORM-OFF-TEST switch to OFF. Set synchronizer ERROR SIGNAL switch to +.

d. Phaselock sweep oscillator as follows:

1. Set sweep oscillator to manual sweep mode with manual sweep control fully counterclockwise.

2. Set sweep oscillator start marker to low frequency of selected spectrum analyzer FREQUENCY BAND and adjust start marker for synchronizer phaselock (minimum phase error).

Scans by ARTEK MEDIA =>

ADJUSTMENTS

5-25. PRELIMINARY BIAS ADJUSTMENT (Cont'd)

3. Set sweep oscillator manual sweep control fully clockwise and stop marker to high frequency of selected spectrum analyzer FREQUENCY BAND. Adjust stop marker for synchronizer phaselock (minimum phase error).

4. Set sweep oscillator to automatic sweep mode and check for phaselocked spectrum analyzer CRT display (Figure 5-43). If the system is breaking phaselock, repeat steps d-1 through d-3.

e. Adjust A20R3 V4 over full range and note position for minimum ripple on CRT trace. Set A20R3 V4 for minimum ripple and record peak-to-peak variation.

_____ dB peak-to-peak

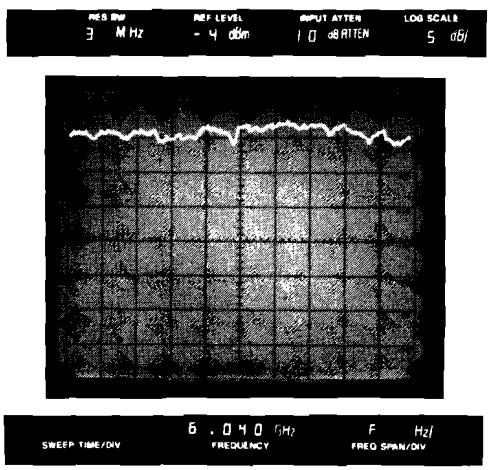

Figure 5-43. Phaselocked Spectrum Analyzer CRT Display

f. Set 8565A FREQUENCY BAND to 1.7 — 4.1 GHz. Set 8620C sweep oscillator CW MARKER pointer to 2.9 GHz and ΔF pointer to 2.4 GHz (240 MHz X10). Press 8620C ΔF pushbutton and phase lock sweep oscillator as follows:

1. Set sweep oscillator to manual sweep mode with manual sweep control set to midrange (center CRT trace in 10 dB AMPLITUDE SCALE).

2. Adjust CW MARKER control for synchronizer phaselock (minimum phase error).

Scans by ARTEK MEDIA =>

ADJUSTMENTS

5-25. PRELIMINARY BIAS ADJUSTMENT (Cont'd)

3. Set sweep oscillator manual sweep control fully clockwise. Adjust sweep oscillator ΔF control for synchronizer phaselock (minimum phase error).

4. Repeat steps f-1 through f-3 until no further adjustment is necessary.

5. Set sweep oscillator to automatic sweep mode and check for phaselocked spectrum analyzer CRT display (Figure 5-43). If the system is breaking phaselock, repeat steps f-1 through f-4.

g. Check CRT trace peak-to-peak variation is less than or equal to the peak-to-peak variation recorded in step e. If not, adjust A20R3 V4 for minimum ripple and check 3.8 — 8.5 GHz FREQUENCY BAND has approximately same peak-to-peak variation (repeat step d to obtain phaselock on 3.8 — 8.5 GHz FREQUENCY BAND).

h. Set 8565A FREQUENCY BAND to 3.8 — 8.5 GHz. Set 8620C sweep oscillator for a MARKER SWEEP of 3.8 GHz to 8.5 GHz. Phaselock sweep oscillator according to step d.

i. Adjust A20R1 V3 over full range and note position for minimum ripple on CRT trace. Set A20R1 V3 for minimum ripple.

j. Set 8565A FREQUENCY BAND to 8.5 — 18 GHz. Set synchronizer ERROR SIGNAL switch to −. Set 8620C sweep oscillator for a MARKER SWEEP of 8.5 GHz to 18 GHz. Phaselock sweep oscillator according to step d.

k. Adjust A20R2 V5 over full range and note position for minimum ripple on CRT trace. Set A20R2 V5 for minimum ripple.

NOTE

If extended range sweep oscillator (8620C/86290A-H08) is not available, proceed to step n to perform preliminary bias adjustment for the 10.5 to 22 GHz FREQUENCY BAND.

l. Set 8565A FREQUENCY BAND to 10.5 — 22 GHz. Set 8620C/86290A-H08 sweep oscillator for a MARKER SWEEP of 10.5 GHz to 22 GHz. Phaselock sweep oscillator according to step d.

m. Adjust A20 R6 V6 over full range and note position for minimum ripple on CRT trace. Set A20R6 V6 for minimum ripple.

NOTE

Steps m and o are the procedure for performing the preliminary bias adjustment for the 10.5 to 22 GHz FREQUENCY BAND with a standard 8620C/86290A sweep oscillator. If steps l and m have been successfully completed, do not perform steps n and o.

Scans by ARTEK MEDIA =>

5-25. PRELIMINARY BIAS ADJUSTMENT (Cont'd)

n. Set 8565A FREQUENCY BAND to 10.5 — 22 GHz. Set 8620C sweep oscillator CW MARKER pointer to 16.4 GHz and ΔF pointer to 11.9 GHz (119 MHz X10). Press 8620C ΔF pushbutton, and phaselock sweep oscillator as follows:

1. Set sweep oscillator to manual sweep mode with manual sweep control set to midrange.
2. Adjust CW MARKER control for synchronizer phaselock (minimum phase error).
3. Set sweep oscillator manaul sweep control fully counterclockwise. Adjust sweep oscillator ΔF control for synchronizer phaselock (minimum phase error).
4. Repeat steps n-1 through n-3 until no further adjustment is necessary.
5. Set sweep oscillator to automatic sweep mode and check for phaselocked spectrum analyzer CRT display (Figure 5-44). If system is breaking phaselock repeat steps n-1 through n-4.

o. Adjust A20R6 V6 over full range and note position for minimum ripple on CRT trace. Set A20R6 V6 for minimum ripple.

p. Set A28S1 NORM-OFF-TEST switch to NORM. Perform Paragraph 5-26 YTF TRCKING Adjustment and 5-27 Frequency Response Adjustments.

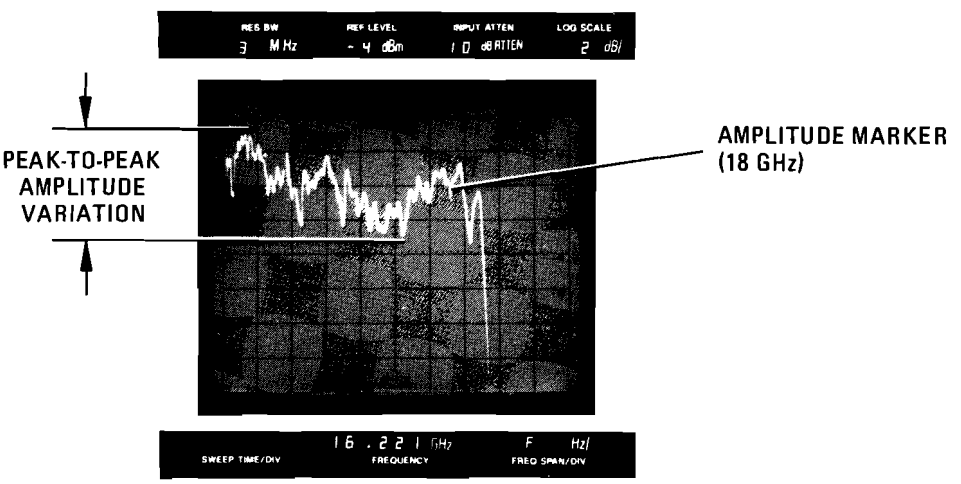

Figure 5-44. Phase Locked Spectrum Analyzer CRT Display (10.5 – 18 GHz)

Scans by ARTEK MEDIA =>

ADJUSTMENTS

5-26. YTF TRACKING ADJUSTMENT

REFERENCE:

Service Sheets 12 and 14

DESCRIPTION

The spectrum analyzer is set to ZERO SPAN (1st L.O. is CW frequency) and the YIG Tuned Filter (YTF) is swept around the center frequency. This results in the YTF passband being displayed on the CRT screen. YTF tracking adjustments are performed to keep the YTF passband centered around the center frequency vertical graticule line over the full frequency range of the spectrum analyzer.

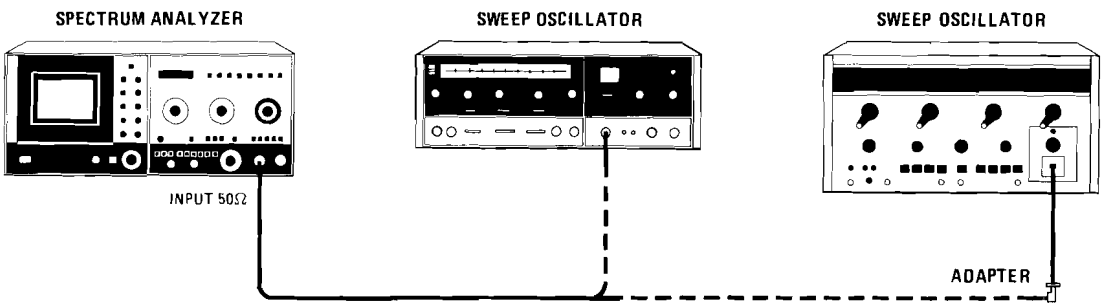

Figure 5-45. YTF Tracking Adjustment Test Setup

EQUIPMENT:

NOTE

If an extended range sweep oscillator (8620C/86290A-H08) is available, the 8690B/8696A sweep oscillator is not required.

Sweep Oscillator (2 — 18 GHz) . . . . . HP 8620C/86290A
Sweep Oscillator (18 — 22 GHz) . . . . . HP 86290B/8696A
Adapter, Waveguide to SMA Jack . . . . . Narda 4608

Scans by ARTEK MEDIA =>

ADJUSTMENTS

5-26. YTF TRACKING ADJUSTMENT (Cont'd)

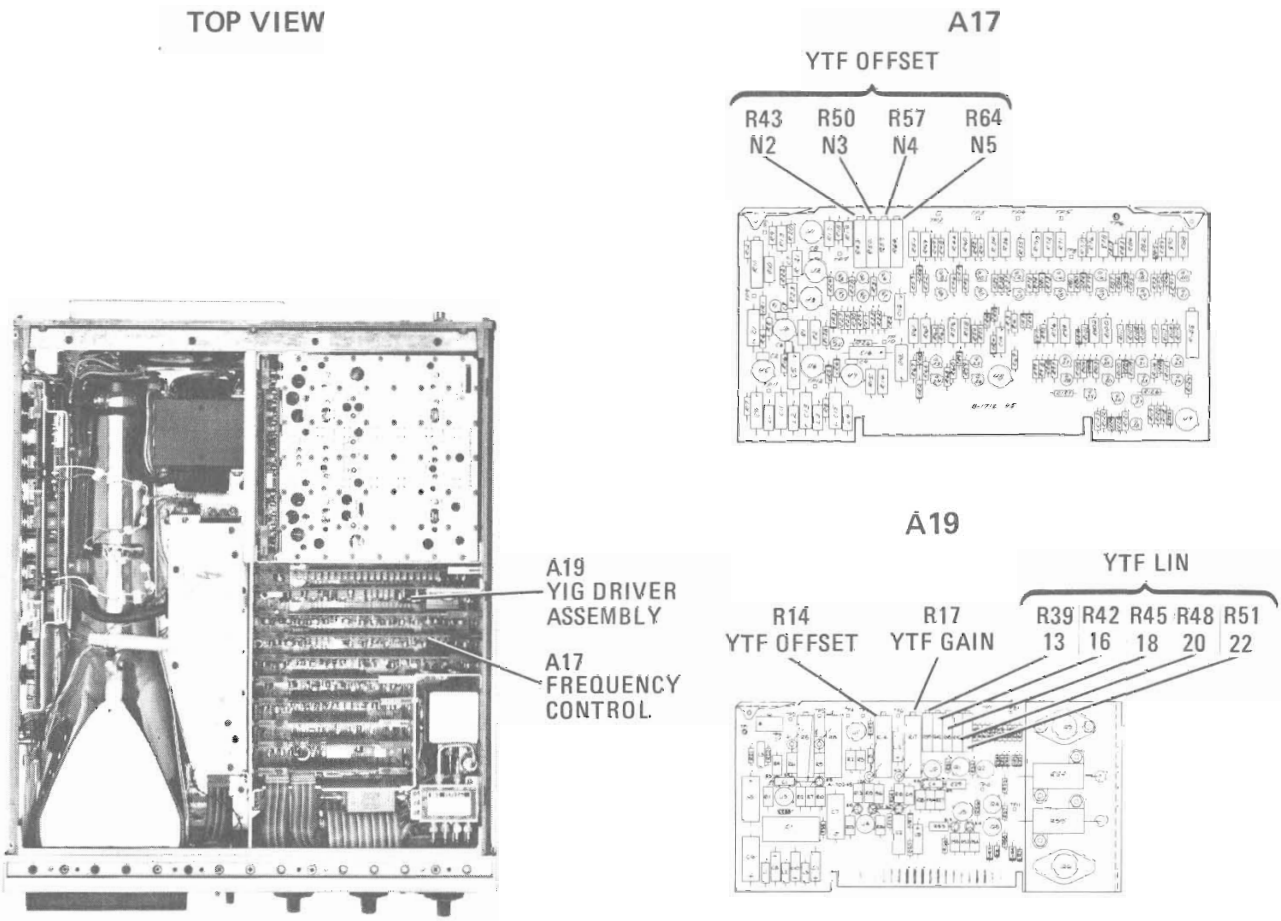

Figure 5-46. YTF Tracking Adjustment Locations

PROCEDURE:

a. Set LINE switch OFF disconnect power cord, and remove 8565A top cover.

Scans by ARTEK MEDIA =>

5-26. YTF TRACKING ADJUSTMENT (Cont'd)

b. Reconnect power cord, set LINE switch ON, connect equipment as shown in Figure 5-45, and set 8565A controls as follows:

Set all Normal Settings (controls marked with green)

FREQUENCY BAND GHz	1.7 – 4.1
INPUT ATTEN	10 dB
REF LEVEL	0 dBm
REF LEVEL FINE	0
RESOLUTION BW	3 MHz
FREQUENCY SPAN MODE	ZERO SPAN
SWEEP TIME/DIV	10 mSEC
AUTO STABILIZER	OFF
PRESELECTOR PEAK	Centered in green
TUNING	2.000 GHz

c. Set A19S1 YTF TRACK switch to TEST position.

d. Simultaneously depress EXT and INT SWEEP SOURCE pushbuttons to obtain a dot on spectrum analyzer CRT display. Adjust front panel HORIZ POSN to position dot on center vertical graticule line. Set SWEEP SOURCE to INT.

e. Tracking adjustments in Table 5-12 are listed in three groups (A, B, and C). Perform adjustments according to groups, and repeat adjustments in each group before proceeding to the next group of adjustments. Perform each tracking adjustment listed in Table 5-12 as follows:

NOTE

A19R17 YTF GAIN is listed in Table 5-12 as the tracking adjustment at frequencies of 4 GHz, 8.5 GHz and 10.5 GHz. Adjust A19R17 YTF GAIN for a centered YTF passband at 10.5 GHz and check that at least 25% of passband is on each side of center vertical graticule line at 4 GHz and 8.5 GHz.

1. Select spectrum analyzer FREQUENCY BAND and adjust TUNING control for given FREQUENCY.

2. Remove error due to hysterisis by switching FREQUENCY SPAN MODE to FULL BAND, then back to ZERO SPAN.

3. Set sweep oscillator for a CW frequency equal to spectrum analyzer FREQUENCY. Adjust sweep oscillator CW frequency for maximum signal amplitude on spectrum analyzer CRT display.

4. Perform corresponding YTF tracking adjustment to center passband (10 dB points) on spectrum analyzer CRT display (Figure 5-47). Ensure that at least 25%of passband is on each side of center vertical graticule line.

f. Set A19S1 YTF TRACK switch to NORM. Set LINE switch OFF, disconnect power cord, and install 8565A top cover.

Scans by ARTEK MEDIA =>

5-26. YTF TRACKING ADJUSTMENT (Cont'd)

Table 5-12. YTF Tracking Adjustment

Adjustment Group	Frequency Band	Frequency	Tracking Adjustment	
A	1.7 – 4.1 GHz	2.000 GHz	A19R14	YTF OFFSET
	1.7 – 4.1 GHz	4.000 GHz	A19R17	YTF GAIN
	3.8 – 8.5 GHz	4.000 GHz	A17R43	YTF OFFSET N2
	3.8 – 8.5 GHz	8.500 GHz	A19R17	YTF GAIN
	5.8 – 12.9 GHz	8.500 GHz	A17R50	YTF OFFSET N3
	5.8 – 12.9 GHz	10.500 GHz	A19R17	YTF GAIN
B	8.5 – 18 GHz	10.500 GHz	A17R57	YTF OFFSET N4
	8.5 – 18 GHz	13.000 GHz	A19R39	YTF LIN 13
	8.5 – 18 GHz	16.000 GHz	A19R42	YTF LIN 16
	8.5 – 18 GHz	18.000 GHz	A19R45	YTF LIN 18
C	10.5 – 22 GHz	10.500 GHz	A17R64	YTF OFFSET N5
	10.5 – 22 GHz	20.000 GHz	A19R48	YTF LIN 20
	10.5 – 22 GHz	22.000 GHz	A19R51	YTF LIN 22

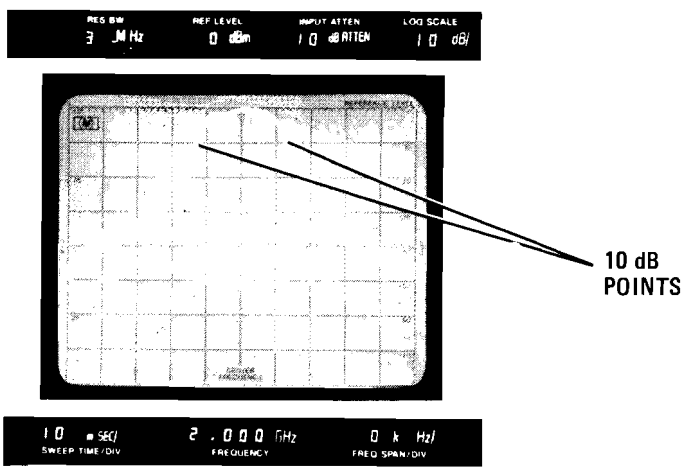

Figure 5-47. YTF Passband Display

Scans by ARTEK MEDIA =>

ADJUSTMENTS

5-27. FREQUENCY RESPONSE ADJUSTMENT

REFERENCE:

Service Sheets 19 and 20

DESCRIPTION:

NOTE

This adjustment requires the prior performance of the Preliminary Bias (5-25) and YTF Tracking (5-26) adjustments.

A synchronizer and sweep oscillator are connected to make a tracking generator for the 8565A. The YTF is modulated with a 1 kHz sine wave to eliminate amplitude variations due to small errors in YTF Tracking. The sweep oscillator is phaselocked across each FREQUENCY BAND, and frequency response adjustments are performed.

CONFIGURATION A

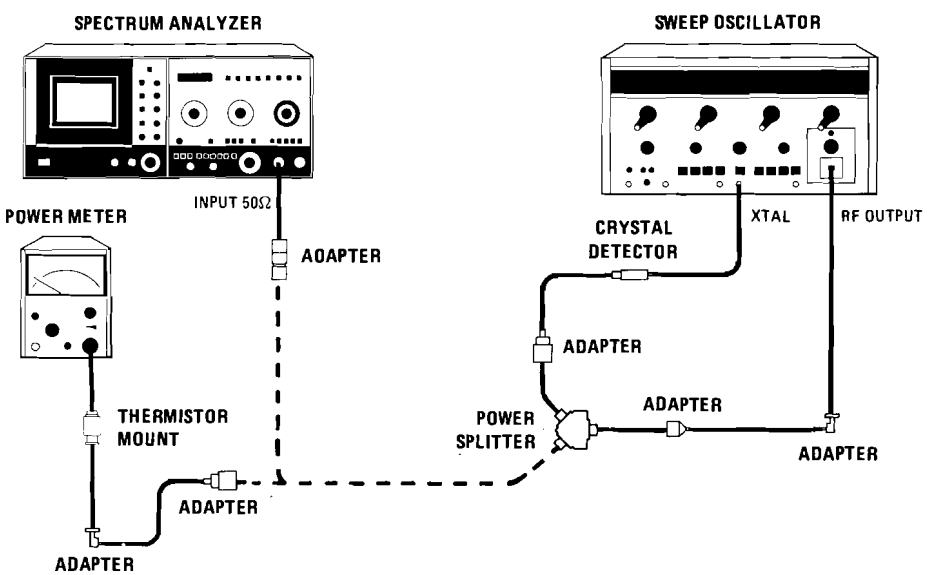

Figure 5-48. Frequency Response Adjustment Test Setup (1 of 2)

Scans by ARTEK MEDIA =>

ADJUSTMENTS

5-27. FREQUENCY RESPONSE ADJUSTMENTS (Cont'd)

CONFIGURATION B

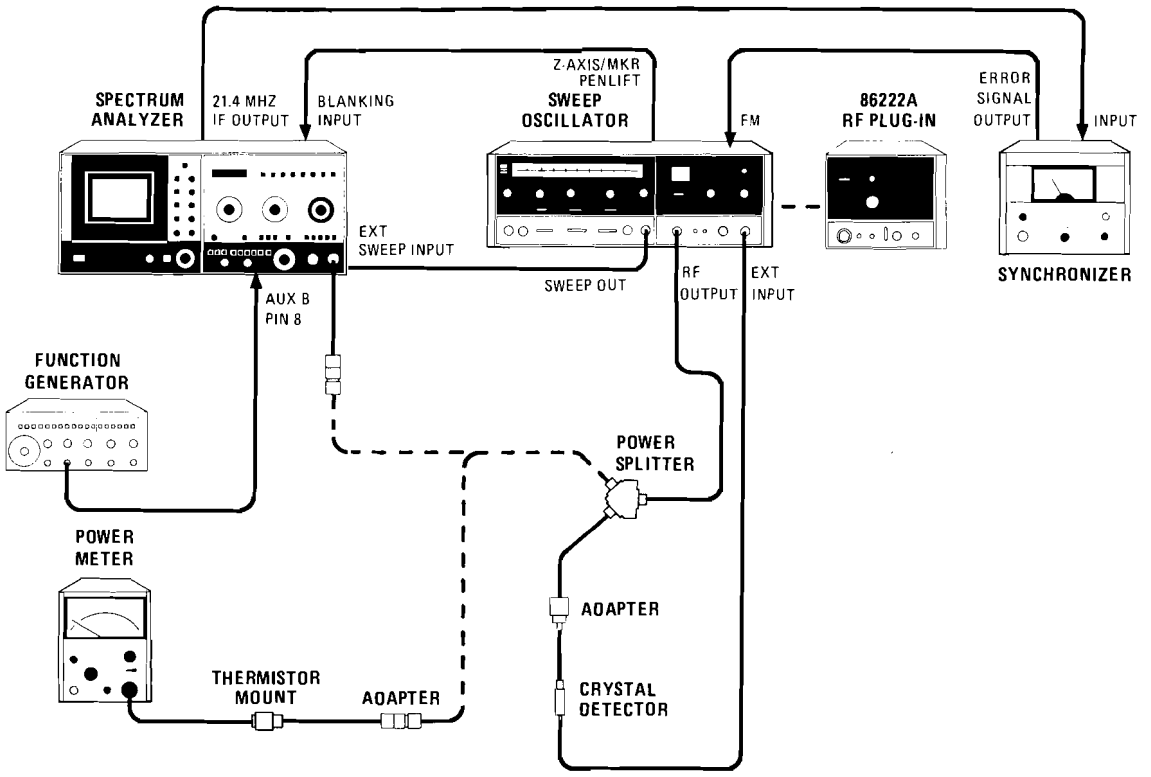

Figure 5-48. Frequency Response Adjustment Test Setup (2 of 2)

NOTE

If an extended range sweep oscillator (8620C/86290A-H08) is available, only the test equipment listed for CONFIGURATION A (Figure 5-48) is required. A standard 8620C/86290A sweep oscillator may be substituted, but then equipment listed for both CONFIGURATION A and B is required.

EQUIPMENT:

CONFIGURATION A (Figure 5-48):

Sweep Oscillator	HP 8620C/86290A-H08
RF Plug-in	HP 86222A
Synchronizer	HP 8709-H10
Function Generator	HP 3312A
Power Meter	HP 432A
Power Splitter	HP 11667A Option 002
Thermistor Mount	HP 8478B
Crystal Detector	HP 33330C
Adapter, APC-7 to Type N Male	HP 11525A
Adapter, APC-7 to SMA Female	HP 11534A

Scans by ARTEK MEDIA =>

5-27. FREQUENCY RESPONSE ADJUSTMENTS (Cont'd)

CONFIGURATION B (Figure 5-48):

Sweep Oscillator	HP 8690B/8696A
Power Meter	HP 432A
Power Splitter (Same as CONFIGURATION A)	HP 11667A Option 002
Thermistor Mount	HP K486A
Crystal Detector (Same as CONFIGURATION A)	HP 33330C
Adapter	HP 11525A
Adapter	HP 11534A
Adapter	Narda 4608

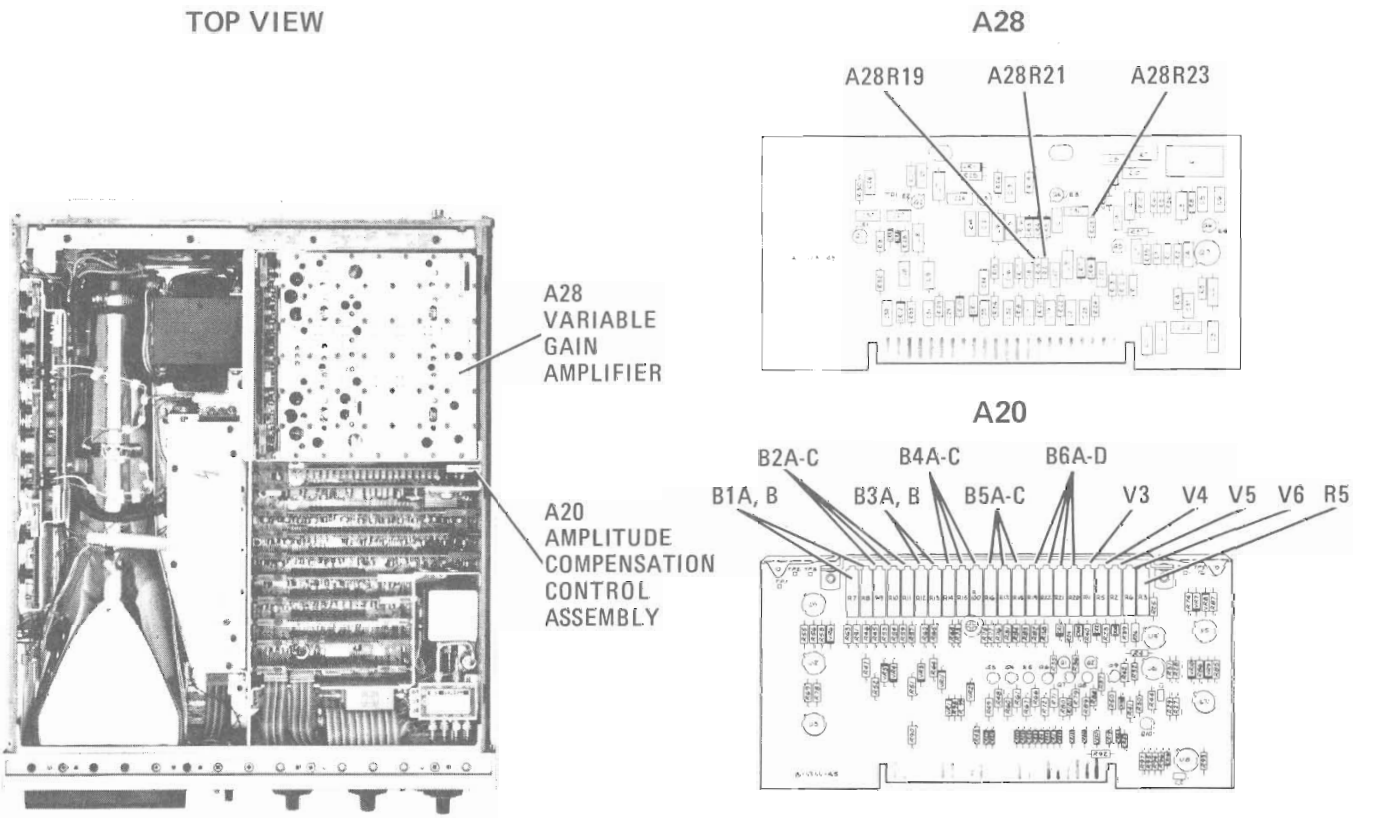

Figure 5-49. Frequency Response Adjustment Locations

PROCEDURE:

a. Set LINE switch OFF, disconnect power cord, and remove 8565A top cover.

Scans by ARTEK MEDIA =>

5-27. FREQUENCY RESPONSE ADJUSTMENTS (Cont'd)

b. Reconnect power cord, set LINE switch ON, connect equipment as shown in Figure 5-48 CONFIGURATION A, and set controls as follows:

8565A:
Set all Normal Settings (controls marked with green)

FREQUENCY BAND GHz	3.8 – 8.5
INPUT ATTEN	10 dB
REF LEVEL	0 dBm
REF LEVEL FINE	–4
SWEEP SOURCE	EXT
FREQUENCY SPAN MODE	FULL BAND
AMPLITUDE SCALE	5 dB (LOG/DIV)
PRESELECTOR PEAK	Centered in green

Sweep Oscillator (8620C/86290A-H08):

BAND	Band 4
MARKER SWEEP pushbutton	Depress
START MARKER pointer	3.8 GHz
STOP MARKER pointer	8.5 GHz
SWEEP TIME-SECONDS	1 - .1
SWEEP TIME-SECONDS vernier	Fully clockwise
RF OFF-ON	ON
ALC switch	EXT
POWER LEVEL	Midrange
RF BLANKING/OFF (Rear Panel)	RF BLANKING
DISPLAY BLANKING/OFF (Rear Panel)	DISPALY BLANKING
FM-NORM-PL (Rear Panel)	PL

c. Set A28S1 NORM-OFF-TEST switch to OFF. Set synchronizer ERROR SIGNAL switch to +. Set function generator for a 1 kHz 4-volt peak-to-peak sine wave output.

d. Phaselock sweep oscillator as follows:

1. Set sweep oscillator to manual sweep mode with manual sweep control fully counterclockwise.

2. Set sweep oscillator start marker to low frequency of selected spectrum analyzer FREQUENCY BAND and adjust start marker for synchronizer phaselock (minimum phase error).

3. Set sweep oscillator manual sweep control fully clockwise and stop marker to high frequency of selected spectrum analyzer FREQUENCY BAND. Adjust stop marker for synchronizer phaselock (minimum phase error).

4. Set sweep oscillator to automatic sweep mode and check for phaselocked spectrum anayzer CRT display. If the system is breaking phaselock, repeat steps d-1 through d-3.

e. Set spectrum analyzer PERSIST and INTENSITY controls for maximum persistence trace with minimum blooming.

Scans by ARTEK MEDIA =>

ADJUSTMENTS

5-27. FREQUENCY RESPONSE ADJUSTMENTS (Cont'd)

f. Set A28S1 NORM-OFF-TEST switch to TEST and front panel INPUT ATTEN to 0 dB. Note any shift in signal level and adjust A28R7 PIN RES for same signal level stored on CRT screen in step e.

g. Set PERSIST control fully counterclockwise and adjust INTENSITY control for normal intensity trace. Set AMPLITUDE SCALE to 2 dB.

h. Adjust REF LEVEL FINE control to set lowest point of trace on center horizontal graticule line. This point is used as a reference in checking for approximately same power level in FREQUENCY BANDS 5.8 — 12.9 GHz, 8.5 — 18 GHz and 10.5 — 22 GHz (steps i through u).

i. Set 8565A FREQUENCY BAND to 5.8 — 12.9 GHz. Set sweep oscillator for a MARKER SWEEP of 5.8 GHz to 12.9 GHz. Phaselock sweep oscillator according to step d.

j. Check that lowest point of trace is within ±2 dB of reference set in step h. If not, change value of factory selected resistor A28R19 B4 GAIN. (Lower value increases signal level).

k. Set 8565A FREQUENCY BAND to 8.5 — 18 GHz and synchronizer ERROR SIGNAL switch to −. Set sweep oscillator for a MARKER SWEEP of 8.5 GHz to 18 GHz. Phaselock sweep oscillator according to step d.

l. Check that lowest point of trace is within ±2 dB of reference set in step h. If not, change value of factory selected resistor A28R21 B5 GAIN (lower value increases signal level).

NOTE

If extended range sweep oscillator (8620C/86290A-H08) is not available, proceed to step o to check power level of the 10.5 — 22 GHz FREQUENCY BAND.

m. Set 8565A FREQUENCY BAND to 10.5 — 22 GHz. Set sweep oscillator for a MARKER SWEEP of 10.5 GHz to 22 GHz. Phaselock sweep oscillator according to step d.

n. Check that lowest point of trace is within ±2 dB of reference set in step h. If not, change value of factory selected resistor A28R23 B6 GAIN (lower value increases signal level).

NOTE

Steps o through u are the procedure for checking power level of the 10.5 — 22 GHz FREQUENCY BAND with a standard 8620C/86290A sweep oscillator. If steps m and n have been successfully completed, do not perform steps o through u.

Scans by ARTEK MEDIA =>

5-27. FREQUENCY RESPONSE ADJUSTMENTS (Cont'd)

o. Set 8565A FREQUENCY BAND to 10.5 — 22 GHz. Set 8620C sweep oscillator CW MARKER pointer to 16.4 GHz and ΔF POINTER to 11.9 GHz. Phaselock sweep oscillator as follows:

1. Set sweep oscillator to manual sweep mode with manual sweep control set to midrange.

2. Adjust CW MARKER control for synchronizer phaselock (minimum phase error).

3. Set sweep oscillator manual sweep control fully counterclockwise. Adjust ΔF control for synchronizer phaselock (minimum phase error).

4. Repeat steps o-1 through o-3 until no further adjustment is necessary.

5. Set sweep oscillator to automatic sweep mode and check for phaselocked spectrum anlayzer CRT display. If the system is breaking phaselock repeat steps o-1 through o-4.

p. Check that lowest point of trace is within ±2 dB of reference set in step h. If not, change value of factory selected resistor A28R23 B6 GAIN (lower value increases signal level).

q. Set sweep oscillator amplitude marker to 18 GHz and note level of spectrum analyzer trace coincident with marker. Disconnect 8620C sweep oscillator output from 8565A INPUT 50Ω.

r. Connect 8690B/8696A as shown in Figure 5-48 CONFIGURATION B and set sweep oscillator for a CW frequency of 18 GHz.

s. Set 8565A SWEEP SOURCE to INT and adjust 8690B/8696A sweep oscillator power level for same 18 GHz signal level noted in step q.

t. Characterize sweep oscillator output as follows:

1. Disconnect power splitter from spectrum analyzer INPUT 50Ω and connect power meter to power splitter output.

2. Note power level at 18 GHz, then slowly tune sweep oscillator from 18 GHz to 22 GHz and note all peak deviations and frequencies at which they occur, from power level at 18 GHz. Record frequencies and deviations in Table 5-13. (See example.)

3. Reconnect power splitter output to 8565A INPUT 50Ω and set 8690B/8696A sweep oscillator for a manually triggered start/stop sweep of 18 GHz to 22 GHz with a sweep time of 100 seconds.

4. Set 8565A PERIST control fully clockwise and press ERASE pushbutton.

5. Trigger sweep oscillator start/stop sweep and adjust sweep time vernier for display similar to that of Figure 5-50. STORE display on spectrum analyzer CRT.

6. Record deviations from signal level at 18 GHz in Table 5-13.

7. Algebraically subtract Peak Deviation from CRT Actual Deviation for each frequency in Table 5-13. Record corrrected deviation in Table 5-13.

Scans by ARTEK MEDIA =>

ADJUSTMENTS

5-27. FREQUENCY RESPONSE ADJUSTMENTS (Cont'd)

Table 5-13. Error Characterization of Signal Source

Frequency (GHz)	Peak Deviation (dB)	CRT Horizontal Displacement (div)	Actual Deviation (dB)	Corrected Deviation (dB)

Example:

Frequency (GHz)	Peak Deviation (dB)	CRT Horizontal Displacement (div)	Actual Deviation (dB)	Corrected Deviation (dB)
18.6	−1.0	7	−1.0	0
19.6	−0.5	7.8	−1.0	−0.5
20.1	+1.0	8.3	0	−1.0
20.6	−1.5	8.7	−2.0	−0.5
21.2	+0.5	9.2	+1.5	+1.0
21.8	−1.0	9.7	−0.4	+0.6

u. Algebraically add the maximum negative corrected deviation and power level recorded at 18 GHz (step t-2). This corrected power level should be within ±2 dB of reference set in step h. If not, change value of factory selected resistor A28R23 B6 GAIN (lower value increases signal level).

Scans by ARTEK MEDIA =>

ADJUSTMENTS

5-27. FREQUENCY RESPONSE ADJUSTMENTS (Cont'd)

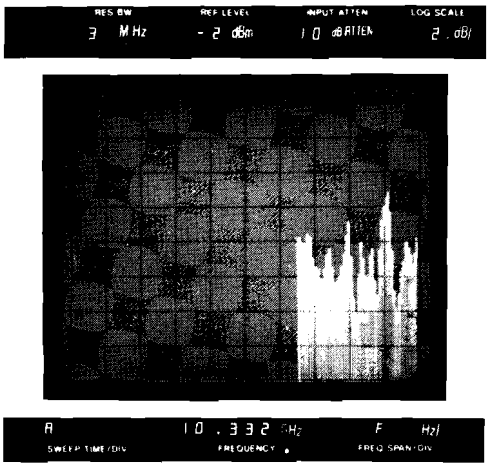

Figure 5-50. Typical Frequency Response (8690B/8696A)

v. Connect equipment as shown in Figure 5-48 CONFIGURATION A. Set A28S1 NORM-OFF-TEST switch to NORM. Set 8565A FREQUENCY BAND to 3.8 — 8.5 GHz, INPUT ATTEN to 10 dB, REF LEVEL to 0 dBm and REF LEVEL FINE to –4. Set syncrhonizer ERROR SIGNAL switch to +. Set sweep oscillator for a MARKER SWEEP of 3.8 GHz to 8.5 GHz.

w. Phaselock sweep oscillator and set output power level as follows:

1. Set sweep oscillator to manual sweep mode with manual sweep control fully counterclockwise.

2. Set sweep oscillator start marker to low frequency of selected spectrum analyzer FREQUENCY BAND and adjust start marker for synchronizer phaselock (minimum phase error).

3. Set sweep oscillator manual sweep control fully clockwise and stop marker to high frequency of selected spectrum analyzer FREQUENCY BAND. Adjust stop marker for synchronizer phaselock (minimum phase error).

4. Disconnect power splitter from 8565A INPUT 50Ω and connect power meter to power splitter output.

5. Slowly adjust sweep oscillator manual sweep control over its entire range, and adjust power level for an average power meter reading of −8 dBm.

6. Disconnect power meter and reconnect power splitter output to 8565A INPUT 50Ω.

7. Set sweep oscillator to automatic sweep mode and check for phaselocked spectrum analyzer CRT display. If the system is breaking phaselock, repeat steps w-1 through w-3.

Scans by ARTEK MEDIA =>

ADJUSTMENTS

5-27. FREQUENCY RESPONSE ADJUSTMENTS (Cont'd)

x. Adjust A20R12 B3A and A20R13 B3B for a CRT trace with minimum slope and an average level two divisions below top horizontal graticule line (Figure 5-51).

y. Adjust A20R1 V3 for minimum amplitude variations on CRT trace. Repeat step x.

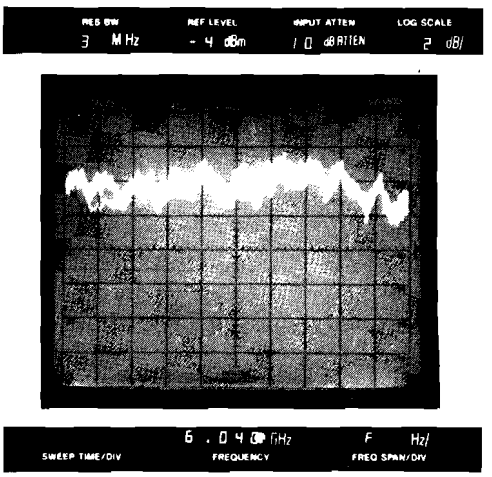

Figure 5-51. Frequency Response Adjustment CRT Display

z. Set 8565A FREQUENCY BAND to 5.8 – 12.9 GHz. Set sweep oscillator for a MARKER SWEEP of 5.8 GHz to 12.9 GHz. Phaselock sweep oscillator and set output power level according to step w.

aa. Adjust A20R14 B4A, A20R15 B4B, and A20R100 B4C for a CRT trace with minimum slope and an average level two divisons below top horizontal graticule line.

bb. Adjust A20R3 V4 for minimum amplitude variations on CRT trace. If amplitude variations on high frequency portion of the band are excessive (> ±2.5 dB) change value of factory selected resistor A20R29 and readjust A20R3 V4.

cc. Set 8565A FREQUENCY BAND to 8.5 — 18 GHz. Set synchronizer ERROR SIGNAL switch to –. Set sweep oscillator for a MARKER SWEEP of 8.5 GHz to 18 GHz. Phaselock sweep oscillator and set output power level according to step w.

dd. Adjust A20R16 B5A, A20R17 B5B, and A20R18 B5C for a CRT trace with minimum slope and an average level two divisions below top horizontal graticule line.

ee. Set A20R5 fully counterclockwise and adjust A20R2 V5 for minimum amplitude variations on CRT trace. Set A20R5 to several positions over its range and readjust A20R2 V5 for minimum amplitude variations at each setting. Set A20R5 to position giving minimum amplitude variations and adjust A20R2 V5 for minimum variations.

Scans by ARTEK MEDIA =>

ADJUSTMENTS

5-27. FREQUENCY RESPONSE ADJUSTMENTS (Cont'd)

NOTE

If extended range sweep oscillator (8620C/86290A-H08) is not available, proceed to step ii to perform flatness adjustment on 10.5 — 22 GHz FREQUENCY BAND.

ff. Set 8565A FREQUENCY BAND to 10.5 — 22 GHz. Set sweep oscillator for a MARKER SWEEP of 10.5 GHz to 22 GHz. Phaselock sweep oscillator and set output power level according to step w.

gg. Adjust A20R19 B6A, A20R22 B6B, A20R21 B6C, and A20R20 B6D for a CRT trace with minimum slope and an average level two divisions below top horizontal graticule line.

hh. Adjust A20R6 V6 for minimum amplitude variations on CRT trace.

NOTE

Steps ii through mm are the flatness adjustment procedure for the 10.5 — 22 GHz FREQUENCY BAND using standard sweep oscillators (8620C/86290A and 8690B/8696A). If steps ff through hh have been successfully completed, do not perform steps ii through mm.

ii. Set 8565A FREQUENCY BAND to 10.5 — 22 GHz. Set 8620C sweep oscillator CW MARKER pointer to 16.4 GHz and ΔF pointer to 11.9 GHz. Phaselock sweep oscillator and set output power level as follows:

1. Set sweep oscillator to manual sweep mode with manual sweep control set to midrange.
2. Adjust CW MAKRER control for synchronizer phaselock (minimum phase error).
3. Set sweep oscillator manual sweep control fully counterclockwise. Adjust ΔF control for synchronizer phaselock (minimum phase error).
4. Repeat steps ii-1 through ii-3 until no further adjustment is necessary.
5. Disconnect power splitter from 8565A INPUT 50Ω and connect power meter to power splitter output.
6. Set 8565A AMPLITUDE SCALE to 10 dB and note that CRT trace can be manually swept with sweep oscillator manual sweep control. Manually sweep spectrum analyzer CRT trace from left graticule edge (10.5 GHz) to six and one-half divisions (18 GHz) and adjust sweep oscillator power level for an average power meter reading of −8 dBm over this range.
7. Disconnect power meter and reconnect power splitter output to 8565A INPUT 50Ω. Set 8565A AMPLITUDE SCALE to 2 dB.
8. Set sweep oscillator to automatic sweep mode and check for phaselocked spectrum analyzer CRT display. If system is breaking phaselock, repeat steps ii-1 through ii-4.

Scans by ARTEK MEDIA =>

ADJUSTMENTS

5-27. FREQUENCY RESPONSE ADJUSTMENTS (Cont'd)

jj. Adjust A20R19 B6A, A20R22 B6B, and A20R21 B6C, for a CRT trace with minimum slope and an average level two divisions below top horizontal graticule line over the first six and one-half divisions of sweep.

kk. Adjust A20R6 V6 for minimum amplitude variations over first six and one-half divisions of CRT trace.

ll. Perform steps q through t.

mm. Use corrected deviation data (step t-7) to determine approximate slope of corrected CRT trace. Adjust A20R20 B6D for a corrected CRT trace with minimum slope and an average level two divisions below top horizontal graticule line.

nn. Connect equipment as shown in Figure 5-48 CONFIGURATON A. Select 8565A FREQUENCY BAND of 1.7 — 4.1 GHz and set SWEEP SOURCE to EXT. Set synchronizer ERROR SIGNAL switch to +. Set 8620C sweep oscillator CW MARKER pointer to 2.9 GHz and ΔF pointer to 2.4 GHz. Depress 8620C ΔF pushbutton. Phaselock sweep oscillator and set output power level as follows:

1. Set sweep oscillator to manual sweep mode with manual sweep control fully clockwise.
2. Adjust sweep oscillator ΔF control for synchronizer phaselock (minimum phase error).
3. Set sweep oscillator manual sweep control to midrange. Adjust CW MARKER control for synchronizer phaselock (minimum phase error).
4. Repeat steps nn-1 through nn-3 until no further adjustment is necessary.
5. Disconnect power splitter from 8565A INPUT 50Ω and connect power meter to power splitter output.
6. Slowly adjust sweep oscillator manaul sweep control over its entire range, and adjust power level for an average power meter reading of −8 dBm.
7. Disconnect power meter and reconnect power splitter output to 8565A INPUT 50Ω.
8. Set sweep oscillator to automatic sweep mode and check for phaselocked spectrum analyzer CRT display. If system is breaking phaselock, repeat steps nn-1 through nn-4.

oo. Adjust A20R9 B2A, A20R10 B2B, and A20R11 B2C for a CRT trace with minimum slope and an average level two divisons below top horizontal graticule line.

pp. Set sweep oscillator LINE switch OFF and replace 86290A RF Plug-in in test setup (Figure 5-48 CONFIGURATION A) with 86222 RF Plug-in. Set sweep oscillator LINE switch ON, POWER LEVEL to midrange, ALC switch to EXT, and rear panel FM-NORM-PL switch to PL.

qq. Set 8565A FREQUENCY BAND to .01 — 1.8 GHz. Set sweep oscillator for a MARKER SWEEP of .01 GHz to 1.8 GHz. Phaselock sweep oscillator and set output power level according to step w.

Scans by ARTEK MEDIA =>

5-27. FREQUENCY RESPONSE ADJUSTMENTS (Cont'd)

rr. Adjust A20R7 B1A and A20R8 B1B for a CRT trace with minimum slope and an average level two divisions below top horizontal graticule line.

ss. Adjustment complete. Set LINE switch OFF, disconnect power cord, and install 8565A top cover.

5-28. ABSOLUTE AMPLITUDE CALIBRATION

REFERENCE:

Service Sheet 20

DESCRIPTION:

The 100 MHz CAL OUTPUT signal is displayed on the spectrum analyzer CRT screen. Factory selected resistor A28R1 is selected to give REF LEVEL CAL enough adjustment range for absolute amplitude calibration.

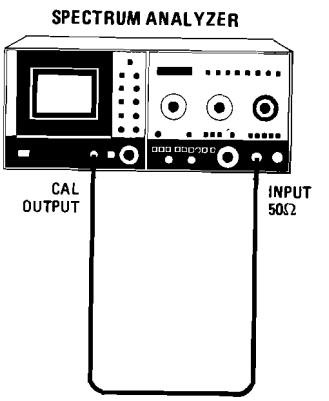

Figure 5-52. Absolute Amplitude Calibration Test Setup

Scans by ARTEK MEDIA =>

ADJUSTMENTS

5-28. ABSOLUTE AMPLITUDE CALIBRATION (Cont'd)

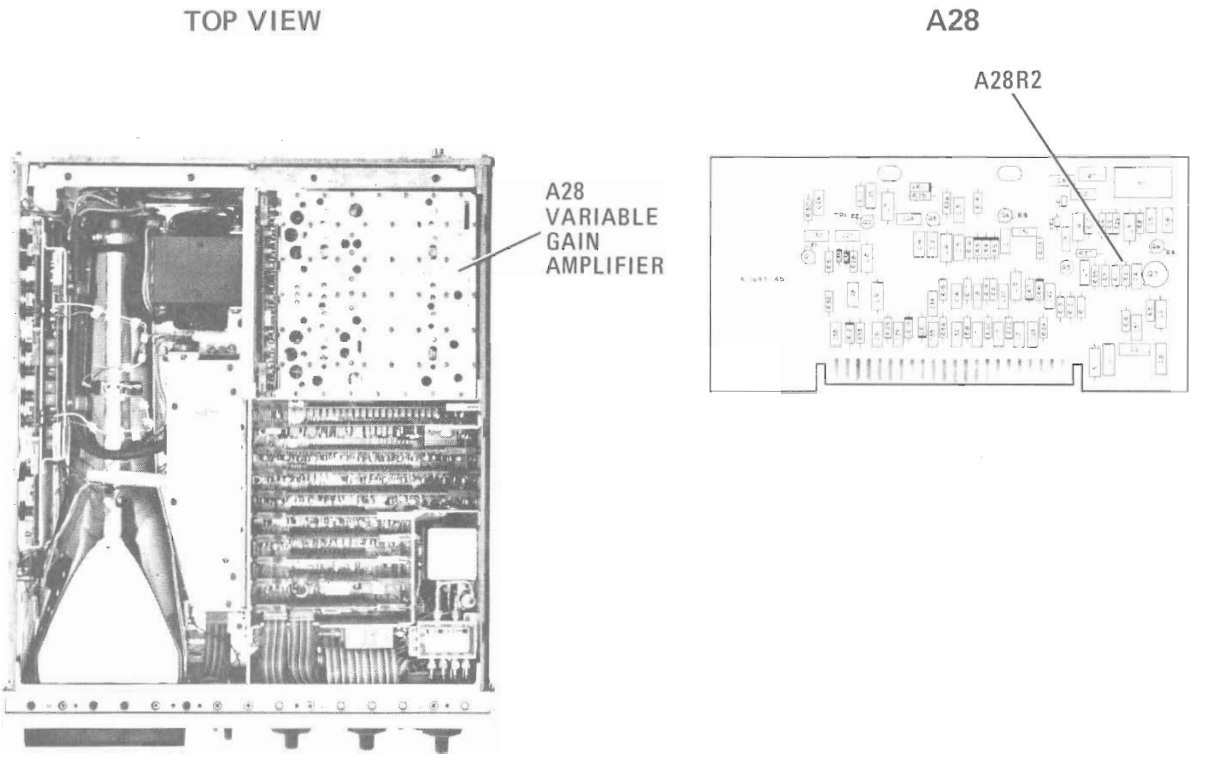

Figure 5-53. Absolute Amplitude Calibration Adjustment Location

PROCEDURE:

a. Set LINE switch OFF, disconnect power cord, and remove 8565A top cover.

b. Reconnect power cord, set LINE switch ON, and set 8565A controls as follows:

Set all Normal Settings (controls marked with green)

FREQUENCY BAND GHz	.01 – 1.8
INPUT ATTEN	10 dB
REF LEVEL	0 dBm
REF LEVEL FINE	0
RESOLUTION BW	3 MHz
FREQUENCY SPAN/DIV	2 MHz
AMPLITUDE SCALE	2 dB
TUNING	.100 GHz
REF LEVEL CAL	Fully counterclockwise

c. Adjust TUNING control to center 100 MHz signal on CRT display.

d. Adjust REF LEVEL CAL clockwise to increase 100 MHz signal amplitude by 3 dB (1 1/2 divisions).

Scans by ARTEK MEDIA =>

ADJUSTMENTS

5-28. ABSOLUTE AMPLITUDE CALIBRATION (Cont'd)

e. Note how many dB signal peak is away from center horizontal graticule line.

f. For every dB signal peak is away from center horizontal graticule line, change value of factory selected resistor A28R2 by 10%. (An increase in resistance will increase signal level.)

g. Adjust REF LEVEL CAL to position signal peak on center horizontal graticule line.

h. Adjustment complete. Set LINE switch OFF, disconnect power cord, and install 8565A top cover.

Scans by ARTEK MEDIA =>

SECTION VI
REPLACEABLE PARTS

6-1. INTRODUCTION

6-2. This section contains information for ordering parts. Table 6-1 lists abbreviations used in the parts list and throughout the manual. Table 6-2 lists all replaceable parts in reference designator order. Table 6-3 contains names and addresses that correspond to the manufacturer's code numbers.

6-3. ABBREVIATIONS

6-4. Table 6-1 lists abbreviations used in the parts list, schematics and throughout the manual. In some cases, two forms of the abbreviation are given, one uses all capital letters, and one partial or no capitals. This occurs because the abbreviations in the parts list are always all capitals. However, in the schematics and other parts of the manual, other abbreviation forms are used with both lower case and upper case letters.

6-5. REPLACEABLE PARTS LIST

6-6. Table 6-2 is the list of replaceable parts and is organized as follows:

a. Electrical assemblies and their components in alpha-numerical order by reference designation.

b. Chassis-mounted parts in alpha-numeric order by reference designation.

c. Miscellaneous parts.

d. Illustrated parts breakdown.

The information given for each part consists of the following:

a. The Hewlett-Packard part number

b. The total quantity (Qty) in the instrument.

c. The description of the part.

d. The typical manufacturer of the part in a five-digit code.

e. Manufacturer code number for the part.

The total quantity for each part is given only once — at the first appearance of the part number in the list.

6-7. ORDERING INFORMATION

6-8. To order a part listed in the replaceable parts table, quote the Hewlett-Packard part number, indicate quantity required, and address the order to the nearest Hewlett-Packard office.

6-9. To order a part that is not listed in the replaceable parts table, include the instrument model number, instrument serial number, the description and function of the part, and the number of parts required. Address the order to the nearest Hewlett-Packard office.

Scans by ARTEK MEDIA =>

Table 6-1. Reference Designations and Abbreviations (1 of 2)

REFERENCE DESIGNATIONS

A . . . . . assembly
AT . . attenuator; isolator; termination
B . . . . . fan; motor
BT . . . . . battery
C . . . . . capacitor
CP . . . . . coupler
CR . . . . . diode; diode thyristor; varactor
DC . . . directional coupler
DL . . . . . delay line
DS . . . . . annunciator; signaling device (audible or visual); lamp; LED
E . . . . . miscellaneous electrical part
F . . . . . fuse
FL . . . . . filter
H . . . . . hardware
HY . . . . . circulator
J . . . electrical connector (stationary portion); jack
K . . . . . relay
L . . . . . coil; inductor
M . . . . . meter
MP . . . . . miscellaneous mechanical part
P . . . electrical connector (movable portion); plug
Q . . . . . transistor; SCR; triode thyristor
R . . . . . resistor
RT . . . . . thermistor
S . . . . . switch
T . . . . . transformer
TB . . . . . terminal board
TC . . . . . thermocouple
TP . . . . . test point
U . . . . . integrated circuit; microcircuit
V . . . . . electron tube
VR . . . . voltage regulator; breakdown diode
W . . . . cable; transmission path; wire
X . . . . . socket
Y . . . . crystal unit (piezoelectric or quartz)
Z . . . . tuned cavity; tuned circuit

ABBREVIATIONS

A . . . . . ampere
ac . . . . alternating current
ACCESS . . . . . accessory
ADJ . . . . . adjustment
A/D . . . . analog-to-digital
AF . . . . . audio frequency
AFC . . . . . automatic frequency control
AGC . . . . . automatic gain control
AL . . . . . aluminum
ALC . . . . . automatic level control
AM . . . amplitude modulation
AMPL . . . . . amplifier
APC . . . . automatic phase control
ASSY . . . . . assembly
AUX . . . . . auxiliary
avg . . . . . average
AWG . . . . American wire gauge
BAL . . . . . balance
BCD . . . . . binary coded decimal
BD . . . . . board
BE CU . . . . . beryllium copper
BFO . . . . . beat frequency oscillator
BH . . . . . binder head
BKDN . . . . . breakdown
BP . . . . . bandpass
BPF . . . . . bandpass filter
BRS . . . . . brass
BWO . . . . . backward-wave oscillator
CAL . . . . . calibrate
ccw . . counter-clockwise
CER . . . . . ceramic
CHAN . . . . . channel
cm . . . . . centimeter
CMO . . cabinet mount only
COAX . . . . . coaxial
COEF . . . . . coefficient
COM . . . . . common
COMP . . . . . composition
COMPL . . . . . complete
CONN . . . . . connector
CP . . . . . cadmium plate
CRT . . . cathode-ray tube
CTL . . . . complementary transistor logic
CW . . . . . continuous wave
cw . . . . . clockwise
cm . . . . . centimeter
D/A . . . . digital-to-analog
dB . . . . . decibel
dBm . . . . decibel referred to 1 mW
dc . . . . . direct current
deg . . degree (temperature interval or difference)
° . . . . . degree (plane angle)
°C . . . . . degree Celsius (centigrade)
°F . . . . degree Fahrenheit
°K . . . . . degree Kelvin
DEPC . . deposited carbon
DET . . . . . detector
diam . . . . . diameter
DIA . . . diameter (used in parts list)
DIFF AMPL . . differential amplifier
div . . . . . division
DPDT . . . . . double-pole, double-throw
DR . . . . . drive
DSB . . . . double sideband
DTL . . . . diode transistor logic
DVM . . . digital voltmeter
ECL . . . . emitter coupled logic
EMF . . electromotive force
EDP . . . . . electronic data processing
ELECT . . . . . electrolytic
ENCAP . . . . encapsulated
EXT . . . . . external
F . . . . . farad
FET . . . . . field-effect transistor
F/F . . . . . flip-flop
FH . . . . . flat head
FIL H . . . . . fillister head
FM . . frequency modulation
FP . . . . . front panel
FREQ . . . . . frequency
FXD . . . . . fixed
g . . . . . gram
GE . . . . . germanium
GHz . . . . . gigahertz
GL . . . . . glass
GND . . . . . ground(ed)
H . . . . . henry
h . . . . . hour
HET . . . . . heterodyne
HEX . . . . . hexagonal
HD . . . . . head
HDW . . . . . hardware
HF . . . . . high frequency
HG . . . . . mercury
HI . . . . . high
HP . . . . . Hewlett-Packard
HPF . . . . . high pass filter
HR . . . . . hour (used in parts list)
HV . . . . . high voltage
Hz . . . . . Hertz
IC . . . . integrated circuit
ID . . . . . inside diameter
IF . . . . . intermediate frequency
IMPG . . . . . impregnated
in . . . . . inch
INCD . . . . . incandescent
INCL . . . . . include(s)
INP . . . . . input
INS . . . . . insulation
INT . . . . . internal
kg . . . . . kilogram
kHz . . . . . kilohertz
kΩ . . . . . kilohm
kV . . . . . kilovolt
lb . . . . . pound
LC . . . . . inductance-capacitance
LED . . light-emitting diode
LF . . . . . low frequency
LG . . . . . long
LH . . . . . left hand
LIM . . . . . limit
LIN . . . linear taper (used in parts list)
lin . . . . . linear
LK WASH . . . lock washer
LO . . . low; local oscillator
LOG . . . . logarithmic taper (used in parts list)
log . . . . . logrithm(ic)
LPF . . . . . low pass filter
LV . . . . . low voltage
m . . . . . meter (distance)
mA . . . . . milliampere
MAX . . . . . maximum
MΩ . . . . . megohm
MEG . . . . meg (10^6) (used in parts list)
MET FLM . . . . metal film
MET OX . . metallic oxide
MF . . . medium frequency; microfarad (used in parts list)
MFR . . . . . manufacturer
mg . . . . . milligram
MHz . . . . . megahertz
mH . . . . . millihenry
mho . . . . . mho
MIN . . . . . minimum
min . . . . . minute (time)
. . .' . . . . . minute (plane angle)
MINAT . . . . . miniature
mm . . . . . millimeter

NOTE

All abbreviations in the parts list will be in upper-case.

Scans by ARTEK MEDIA =>

Table 6-2. Reference Designations and Abbreviations (cont'd)

MOD	modulator
MOM	momentary
MOS	metal-oxide semiconductor
ms	millisecond
MTG	mounting
MTR	meter (indicating device)
mV	millivolt
mVac	millivolt, ac
mVdc	millivolt, dc
mVpk	millivolt, peak
mVp-p	millivolt, peak-to-peak
mVrms	millivolt, rms
mW	milliwatt
MUX	multiplex
MY	mylar
μA	microampere
μF	microfarad
μH	microhenry
μmho	micromho
μs	microsecond
μV	microvolt
μVac	microvolt, ac
μVdc	microvolt, dc
μVpk	microvolt, peak
μVp-p	microvolt, peak-to-peak
μVrms	microvolt, rms
μW	microwatt
nA	nanoampere
NC	no connection
N/C	normally closed
NE	neon
NEG	negative
nF	nanofarad
NI PL	nickel plate
N/O	normally open
NOM	nominal
NORM	normal
NPN	negative-positive-negative
NPO	negative-positive zero (zero temperature coefficient)
NRFR	not recommended for field replacement
NSR	not separately replaceable
ns	nanosecond
nW	nanowatt
OBD	order by description
OD	outside diameter
OH	oval head
OP AMPL	operational amplifier
OPT	option
OSC	oscillator
OX	oxide
oz	ounce
Ω	ohm
P	peak (used in parts list)
PAM	pulse-amplitude modulation
PC	printed circuit
PCM	pulse-code modulation; pulse-count modulation
PDM	pulse-duration modulation
pF	picofarad
PH BRZ	phosphor bronze
PHL	Phillips
PIN	positive-intrinsic-negative
PIV	peak inverse voltage
pk	peak
PL	phase lock
PLO	phase lock oscillator
PM	phase modulation
PNP	positive-negative-positive
P/O	part of
POLY	polystyrene
PORC	porcelain
POS	positive; position(s) (used in parts list)
POSN	position
POT	potentiometer
p-p	peak-to-peak
PP	peak-to-peak (used in parts list)
PPM	pulse-position modulation
PREAMPL	preamplifier
PRF	pulse-repetition frequency
PRR	pulse repetition rate
ps	picosecond
PT	point
PTM	pulse-time modulation
PWM	pulse-width modulation
PWV	peak working voltage
RC	resistance-capacitance
RECT	rectifier
REF	reference
REG	regulated
REPL	replaceable
RF	radio frequency
RFI	radio frequency interference
RH	round head; right hand
RLC	resistance-inductance-capacitance
RMO	rack mount only
rms	root-mean-square
RND	round
ROM	read-only memory
R&P	rack and panel
RWV	reverse working voltage
S	scattering parameter
s	second (time)
..."	second (plane angle)
S-B	slow-blow (fuse) (used in parts list)
SCR	silicon controlled rectifier; screw
SE	selenium
SECT	sections
SEMICON	semiconductor
SHF	superhigh frequency
SI	silicon
SIL	silver
SL	slide
SNR	signal-to-noise ratio
SPDT	single-pole, double-throw
SPG	spring
SR	split ring
SPST	single-pole, single-throw
SSB	single sideband
SST	stainless steel
STL	steel
SQ	square
SWR	standing-wave ratio
SYNC	synchronize
T	timed (slow-blow fuse)
TA	tantalum
TC	temperature compensating
TD	time delay
TERM	terminal
TFT	thin-film transistor
TGL	toggle
THD	thread
THRU	through
Ti	titanium
TOL	tolerance
TRIM	trimmer
TSTR	transistor
TTL	transistor-transistor logic
TV	television
TVI	television interference
TWT	traveling wave tube
U	micro (10^{-6}) (used in parts list)
UF	microfarad (used in parts list)
UHF	ultrahigh frequency
UNREG	unregulated
V	volt
VA	voltampere
Vac	volts, ac
VAR	variable
VCO	voltage-controlled oscillator
Vdc	volts, dc
VDCW	volts, dc, working (used in parts list)
V(F)	volts, filtered
VFO	variable-frequency oscillator
VHF	very-high frequency
Vpk	volts, peak
Vp-p	volts, peak-to-peak
Vrms	volts, rms
VSWR	voltage standing wave ratio
VTO	voltage-tuned oscillator
VTVM	vacuum-tube voltmeter
V(X)	volts, switched
W	watt
W/	with
WIV	working inverse voltage
WW	wirewound
W/O	without
YIG	yttrium-iron-garnet
Z_o	characteristic impedance

NOTE

All abbreviations in the parts list will be in upper-case.

MULTIPLIERS

Abbreviation	Prefix	Multiple
T	tera	10^{12}
G	giga	10^{9}
M	mega	10^{6}
k	kilo	10^{3}
da	deka	10
d	deci	10^{-1}
c	centi	10^{-2}
m	milli	10^{-3}
μ	micro	10^{-6}
n	nano	10^{-9}
p	pico	10^{-12}
f	femto	10^{-15}
a	atto	10^{-18}

Scans by ARTEK MEDIA =>

Table 6-2. Replaceable Parts

Reference Designation	HP Part Number	Qty	Description	Mfr Code	Mfr Part Number
A1	08565-60049	1	ASSEMBLY, FRONT PANEL DISPLAY	28480	08565-60049
A1MP1	08565-40001	1	PANEL, FRONT CRT	28480	08565-40001
A1MP2	08565-00041		PANEL, FRONT LEFT LOWER (STANDARD)	28480	08565-00041
A1MP2	08565-00067		PANEL, FRONT LEFT LOWER (OPT 002)	28480	08565-00067
A1MP3	08565-00040	1	PANEL, FRONT LEFT DISPLAY	28480	08565-00040
A1MP4	08565-00039	1	PANEL, FRONT DISPLAY	28480	08565-00039
A1MP5	0370-2257	1	KNOB, BASE RIB(VIDEO FILTER)	28480	0370-2257
A1MP6	08565-00053	1	SKIRT, VIDEO FILTER	28480	08565-00053
A1MP7	5040-8805	9	KNOB, 5/16" SERIES	28480	5040-8805
A1MP8	5040-8805		KNOB, 5/16" SERIES	28480	5040-8805
A1MP9	5040-8805		KNOB, 5/16" SERIES	28480	5040-8805
A1MP10	5040-8805		KNOB, 5/16" SERIES	28480	5040-8805
A1MP11	5040-8805		KNOB, 5/16" SERIES	28480	5040-8805
A1MP12	5040-8805		KNOB, 5/16" SERIES	28480	5040-8805
A1MP13	0350-1012	6	DECAL-KB CAP 5/16 IN-SER	28480	0350-1012
A1MP14	0350-1012		DECAL-KB CAP 5/16 IN-SER	28480	0350-1012
A1MP15	0350-1012		DECAL-KB CAP 5/16 IN-SER	28480	0350-1012
A1MP16	0350-1012		DECAL-KB CAP 5/16 IN-SER	28480	0350-1012
A1MP17	0350-1012		DECAL-KB CAP 5/16 IN-SER	28480	0350-1012
A1MP18	0350-1012		DECAL-KB CAP 5/16 IN-SER	28480	0350-1012
A1MP19	5040-8817	13	PUSHBUTTON, SQUARE, JADE GRAY	28480	5040-8817
A1MP20	5040-8817		PUSHBUTTON, SQUARE, JADE GRAY	28480	5040-8817
A1MP21	5040-8817		PUSHBUTTON, SQUARE, JADE GRAY	28480	5040-8817
A1MP22	5040-8817		PUSHBUTTON, SQUARE, JADE GRAY	28480	5040-8817
A1MP23	5040-8819	5	PUSHBUTTON, SQUARE, WILLOW GREEN	28480	5040-8819
A1MP24	5040-8821	13	PUSHBUTTON, SQUARE, OLIVE GRAY	28480	5040-8821
A1MP25	0370-0606	29	BEZEL;PUSHBUTTON KNOB, JADE GRAY	28480	0370-0606
A1MP26	0370-0606		BEZEL;PUSHBUTTON KNOB, JADE GRAY	28480	0370-0606
A1MP27	0370-0606		BEZEL;PUSHBUTTON KNOB, JADE GRAY	28480	0370-0606
A1MP28	0370-0606		BEZEL;PUSHBUTTON KNOB, JADE GRAY	28480	0370-0606
A1MP29	0370-0606		BEZEL;PUSHBUTTON KNOB, JADE GRAY	28480	0370-0606
A1MP30	0370-0606		BEZEL;PUSHBUTTON KNOB, JADE GRAY	28480	0370-0606
A1MP31	3030-0051	12	SCREW-SET 4-40 .094-IN-LG SMALL CUP-PT	28480	3030-0051
A1MP32	3030-0051		SCREW-SET 4-40 .094-IN-LG SMALL CUP-PT	28480	3030-0051
A1MP33	3030-0051		SCREW-SET 4-40 .094-IN-LG SMALL CUP-PT	28480	3030-0051
A1MP34	3030-0051		SCREW-SET 4-40 .094-IN-LG SMALL CUP-PT	28480	3030-0051
A1MP35	3030-0051		SCREW-SET 4-40 .094-IN-LG SMALL CUP-PT	28480	3030-0051
A1MP36	3030-0051		SCREW-SET 4-40 .094-IN-LG SMALL CUP-PT	28480	3030-0051
A1MP37	3030-0051		SCREW-SET 4-40 .094-IN-LG SMALL CUP-PT	28480	3030-0051
A1MP38	3030-0051		SCREW-SET 4-40 .094-IN-LG SMALL CUP-PT	28480	3030-0051
A1MP39	3030-0051		SCREW-SET 4-40 .094-IN-LG SMALL CUP-PT	28480	3030-0051
A1MP40	3030-0051		SCREW-SET 4-40 .094-IN-LG SMALL CUP-PT	28480	3030-0051
A1MP41	3030-0051		SCREW-SET 4-40 .094-IN-LG SMALL CUP-PT	28480	3030-0051
A1MP42	3030-0051		SCREW-SET 4-40 .094-IN-LG SMALL CUP-PT	28480	3030-0051
A1A1	08565-60035	1	ASSEMBLY, BEZEL DISPLAY	28480	08565-60035
A1A1D81	1990-0582	24	LED-VISIBLE LUM-INT=3MCD IF=60MA-MAX	28480	1990-0582
A1A1D82	1990-0582		LED-VISIBLE LUM-INT=3MCD IF=60MA-MAX	28480	1990-0582
A1A1D83	1990-0446	8	DISPLAY-NUM SEG 4-CHAR .11-H	28480	1990-0446
A1A1D84	1990-0582		LED-VISIBLE LUM-INT=3MCD IF=60MA-MAX	28480	1990-0582
A1A1D85	1990-0582		LED-VISIBLE LUM-INT=3MCD IF=60MA-MAX	28480	1990-0582
A1A1D86	1990-0582		LED-VISIBLE LUM-INT=3MCD IF=60MA-MAX	28480	1990-0582
A1A1D87	1990-0582		LED-VISIBLE LUM-INT=3MCD IF=60MA-MAX	28480	1990-0582
A1A1D88	1990-0446		DISPLAY-NUM SEG 4-CHAR .11-H	28480	1990-0446
A1A1D89	1990-0582		LED-VISIBLE LUM-INT=3MCD IF=60MA-MAX	28480	1990-0582
A1A1D810	1990-0582		LED-VISIBLE LUM-INT=3MCD IF=60MA-MAX	28480	1990-0582
A1A1D811	1990-0446		DISPLAY-NUM SEG 4-CHAR .11-H	28480	1990-0446
A1A1D812	1990-0582		LED-VISIBLE LUM-INT=3MCD IF=60MA-MAX	28480	1990-0582
A1A1D813	1990-0582		LED-VISIBLE LUM-INT=3MCD IF=60MA-MAX	28480	1990-0582
A1A1D814	1990-0582		LED-VISIBLE LUM-INT=3MCD IF=60MA-MAX	28480	1990-0582
A1A1D815	1990-0582		LED-VISIBLE LUM-INT=3MCD IF=60MA-MAX	28480	1990-0582
A1A1D816	1990-0446		DISPLAY-NUM SEG 4-CHAR .11-H	28480	1990-0446
A1A1D817	1990-0582		LED-VISIBLE LUM-INT=3MCD IF=60MA-MAX	28480	1990-0582
A1A1D818	1990-0582		LED-VISIBLE LUM-INT=3MCD IF=60MA-MAX	28480	1990-0582
A1A1D819	1990-0446		DISPLAY-NUM SEG 4-CHAR .11-H	28480	1990-0446
A1A1D820	1990-0582		LED-VISIBLE LUM-INT=3MCD IF=60MA-MAX	28480	1990-0582
A1A1D821	1990-0582		LED-VISIBLE LUM-INT=3MCD IF=60MA-MAX	28480	1990-0582
A1A1D822	1990-0582		LED-VISIBLE LUM-INT=3MCD IF=60MA-MAX	28480	1990-0582
A1A1D823	1990-0582		LED-VISIBLE LUM-INT=3MCD IF=60MA-MAX	28480	1990-0582
A1A1D824	1990-0446		DISPLAY-NUM SEG 4-CHAR .11-H	28480	1990-0446
A1A1D825	1990-0446		DISPLAY-NUM SEG 4-CHAR .11-H	28480	1990-0446

See introduction to this section for ordering information

Scans by ARTEK MEDIA =>

Table 6-2. Replaceable Parts

Reference Designation	HP Part Number	Qty	Description	Mfr Code	Mfr Part Number
A1A1D826	1990-0582		LED-VISIBLE LUM-INT=3MCD IF=60MA-MAX	28480	1990-0582
A1A1D827	1990-0582		LED-VISIBLE LUM-INT=3MCD IF=60MA-MAX	28480	1990-0582
A1A1D828	1990-0446		DISPLAY-NUM SEG 4-CHAR .11-H	28480	1990-0446
A1A1D829	1990-0582		LED-VISIBLE LUM-INT=3MCD IF=60MA-MAX	28480	1990-0582
A1A1D830	1990-0582		LED-VISIBLE LUM-INT=3MCD IF=60MA-MAX	28480	1990-0582
A1A1D831	1990-0582		LED-VISIBLE LUM-INT=3MCD IF=60MA-MAX	28480	1990-0582
A1A1D832	1990-0582		LED-VISIBLE LUM-INT=3MCD IF=60MA-MAX	28480	1990-0582
A1A1J1	1251-3691	2	CONNECTOR 36-PIN M POST TYPE	28480	1251-3691
A1A1J2	1251-3691		CONNECTOR 36-PIN M POST TYPE	28480	1251-3691
A1A1MP1	08565-40012	1	REFLECTOR	28480	08565-40012
A1A1MP2	08565-40008	4	REFLECTOR	28480	08565-40008
A1A1MP3	08565-40008		REFLECTOR	28480	08565-40008
A1A1MP4	08565-40008		REFLECTOR	28480	08565-40008
A1A1MP5	08565-40008		REFLECTOR	28480	08565-40008
A1A1MP6	08565-40007	3	REFLECTOR	28480	08565-40007
A1A1MP7	08565-40007		REFLECTOR	28480	08565-40007
A1A1MP8	08565-40007		REFLECTOR	28480	08565-40007
A1A2	08565-60007	1	ASSEMBLY, DISPLAY SWITCH	28480	08565-60007
A1A2C1	0180-0197	33	CAPACITOR-FXD 2.2UF+-10% 20VDC TA	0420J	150D225X9020A2
A1A2C2	0180-0229	5	CAPACITOR-FXD 33UF+-10% 10VDC TA	0420J	150D336X9010B2
A1A2CR1	1901-0050	286	DIODE-SWITCHING 80V 200MA 2NS DO-7	28480	1901-0050
A1A2CR2	1901-0050		DIODE-SWITCHING 80V 200MA 2NS DO-7	28480	1901-0050
A1A2CR3	1901-0050		DIODE-SWITCHING 80V 200MA 2NS DO-7	28480	1901-0050
A1A2CR4	1910-0016	3	DIODE-GE 60V 60MA 1US DO-7	28480	1910-0016
A1A2J1	1200-0507	6	SOCKET-IC 16-CONT DIP-SLDR	06776	0002811
A1A2R1	2100-3631	5	RESISTOR-VAR CONTROL CP 10K 10% LIN	28480	2100-3631
A1A2R2	2100-3634	1	RESISTOR-VAR CONTROL CP 2.5M 20% LIN	28480	2100-3634
A1A2R3	2100-3633	1	RESISTOR-VAR CONTROL CP 1K 10% LIN	28480	2100-3633
A1A2R4	2100-3632	1	RESISTOR-VAR CONTROL CP 2K 10% LIN	28480	2100-3632
A1A2R5	2100-3630	1	RESISTOR-VAR CONTROL CP 20K 10% LIN	28480	2100-3630
A1A2R6	2100-3631		RESISTOR-VAR CONTROL CP 10K 10% LIN	28480	2100-3631
A1A2R7	0757-0447	5	RESISTOR 16.2K 1% .125W F TC=0+-100	03298	C4-1/8-T0-1622-F
A1A2R8	0757-0442	103	RESISTOR 10K 1% .125W F TC=0+-100	03298	C4-1/8-T0-1002-F
A1A2R9	0757-0279	49	RESISTOR 3.16K 1% .125W F TC=0+-100	03298	C4-1/8-T0-3161-F
A1A2R10	0757-0278	8	RESISTOR 1.78K 1% .125W F TC=0+-100	03298	C4-1/8-T0-1781-F
A1A2R11	2100-3214	1	RESISTOR-TRMR 100K 10% C TOP-ADJ 1-TRN	73138	72-112-0
A1A2R12	0757-0279		RESISTOR 3.16K 1% .125W F TC=0+-100	03298	C4-1/8-T0-3161-F
A1A2R13	0757-0280	68	RESISTOR 1K 1% .125W F TC=0+-100	03298	C4-1/8-T0-1001-F
A1A2S1	3101-2189	2	SWITCH-PB DPDT MOM .125A 28VAC	28480	3101-2189
A1A2S2	3101-2183	1	SWITCH-PB 4-STATION 20MM C-C SPACING	28480	3101-2183
A1A2VR1	1902-0041	6	DIODE-ZNR 5.11V 5% DO-7 PD=.4W TC=-.009%	0203G	BZ 10939-98
A2	08565-60001	1	ASSEMBLY, FRONT PANEL CONTROL	28480	08565-60001
A2MP1	08565-00001	1	PANEL, FRONT DRESS	28480	08565-00001
A2MP2	08565-00003	1	PANEL, SUB-FRONT	28480	08565-00003
A2MP3	08565-20040	1	WINDOW, FREQ. DISPLAY	28480	08565-20040
				28480	08565-20043
A2MP4	08565-20008	1	KNOB, FINE TUNE	28480	08565-20008
A2MP5	08565-60041	1	KNOB ASSEMBLY, COARSE TUNING	28480	08565-60041
A2MP6	08565-60043	1	KNOB ASSEMBLY, FREQ SPAN/DIV	28480	08565-60043
A2MP7	08565-60044	1	KNOB ASSEMBLY, RES BW	28480	08565-60044
A2MP8	08565-60045	1	KNOB ASSEMBLY, REFERENCE LEVEL	28480	08565-60045
A2MP9	08565-40011	1	POINTER, INPUT ATTENUATOR	28480	08565-40011
A2MP10	08565-00043	1	DISK, INDEX (REF LEVEL DBM)	28480	08565-00043
A2MP11	08565-60047	1	KNOB ASSEMBLY, REFERENCE LEVEL, FINE	28480	08565-60047
A2MP12	08565-60042	1	KNOB ASSEMBLY, SWEEP TIME/DIV.	28480	08565-60042
A2MP13	5040-8805		KNOB, 5/16" SERIES	28480	5040-8805
A2MP14	5040-8805		KNOB, 5/16" SERIES	28480	5040-8805
A2MP15	5040-8805		KNOB, 5/16" SERIES	28480	5040-8805
A2MP16 THRU					
A2MP38	0370-0606		BEZEL:PUSHBUTTON KNOB, JADE GRAY	28480	0370-0606
A2MP39	5040-8816	2	PUSHBUTTON, SQUARE, MINT GRAY	28480	5040-8816
A2MP40	5040-8816		PUSHBUTTON, SQUARE, MINT GRAY	28480	5040-8816
A2MP41	5040-8817		PUSHBUTTON, SQUARE, JADE GRAY	28480	5040-8817
A2MP42	5040-8817		PUSHBUTTON, SQUARE, JADE GRAY	28480	5040-8817
A2MP43	5040-8817		PUSHBUTTON, SQUARE, JADE GRAY	28480	5040-8817
A2MP44	5040-8817		PUSHBUTTON, SQUARE, JADE GRAY	28480	5040-8817
A2MP45	5040-8817		PUSHBUTTON, SQUARE, JADE GRAY	28480	5040-8817

See introduction to this section for ordering information

Scans by ARTEK MEDIA =>

Table 6-2. Replaceable Parts

Reference Designation	HP Part Number	Qty	Description	Mfr Code	Mfr Part Number
A2MP46	5040-8817		PUSHBUTTON, SQUARE, JADE GRAY	28480	5040-8817
A2MP47	5040-8817		PUSHBUTTON, SQUARE, JADE GRAY	28480	5040-8817
A2MP48	5040-8817		PUSHBUTTON, SQUARE, JADE GRAY	28480	5040-8817
A2MP49	5040-8817		PUSHBUTTON, SQUARE, JADE GRAY	28480	5040-8817
A2MP50	5040-8819		PUSHBUTTON' SQUARE, WILLOW GRN	28480	5040-8819
A2MP51	5040-8819		PUSHBUTTON, SQUARE, WILLOW GRN	28480	5040-8819
A2MP52	5040-8819		PUSHBUTTON, SQUARE, WILLOW GRN	28480	5040-8819
A2MP53	5040-8819		PUSHBUTTON, SQUARE, WILLOW GRN	28480	5040-8819
A2MP54	5040-8821		PUSHBUTTON, SQUARE, WILLOW GRN	28480	5040-8821
A2MP55	5040-8821		PUSHBUTTON, SQUARE, OLIVE GRAY	28480	5040-8821
A2MP56	5040-8821		PUSHBUTTON, SQUARE, OLIVE GRAY	28480	5040-8821
A2MP57	5040-8821		PUSHBUTTON, SQUARE, OLIVE GRAY	28480	5040-8821
A2MP58	5040-8821		PUSHBUTTON, SQUARE, OLIVE GRAY	28480	5040-8821
A2DP59	5040-8821		PUSHBUTTON, SQUARE, OLIVE GRAY	28480	5040-8821
A2MP60	5040-8821		PUSHBUTTON, SQUARE, OLIVE GRAY	28480	5040-8821
A2MP61	5040-8821		PUSHBUTTON, SQUARE, OLIVE GRAY	28480	5040-8821
A2MP62	5040-8821		PUSHBUTTON, SQUARE, OLIVE GRAY	28480	5040-8821
A2MP63	5040-8821		PUSHBUTTON, SQUARE, OLIVE GRAY	28480	5040-8821
A2MP64	5040-8821		PUSHBUTTON, SQUARE, OLIVE GRAY	28480	5040-8821
A2MP65	5040-8821		PUSHBUTTON, SQUARE, OLIVE GRAY	28480	5040-8821
A2MP66	5040-8823	1	KNOB, MINT GRAY	28480	5040-8823
A2MP67	08557-20025	1	SHAFT, REF LEVEL FINE	28480	08557-20025
A2MP68	08558-00019	1	DETENT ATTENUATOR	28480	08558-00019
A2MP69	08558-00020	1	DETENT, I.F. GAIN	28480	08558-00020
A2MP70	08558-00021	1	PLATE, LEVEL POT	28480	08558-00021
A2MP71	08558-00022	1	CRANK, SLOTTED	28480	08558-00022
A2MP72	08558-20058	1	HUB,COUPLING	28480	08558-20058
A2MP73	08558-20059	5	HUB, DRIVE	28480	08558-20059
A2MP74	08558-20059		HUB, DRIVE	28480	08558-20059
A2MP75	08558-20059		HUB, DRIVE	28480	08558-20059
A2MP76	08558-20059		HUB, DRIVE	28480	08558-20059
A2MP77	08558-20061	1	LOCKOUT, ROTATING	28480	08558-20061
A2MP78	08558-20062	1	LOCKOUT, FIXED	28480	08558-20062
A2MP79	08558-20089	1	BUSHING, SLOTTED	28480	08558-20089
A2MP80	08558-20005	2	ROTOR, DOUBLE CONTACT	28480	08558-40005
A2MP81	08558-40005		ROTOR, DOUBLE CONTACT	28480	08558-40005
A2MP82	08565-00005	1	DETENT, BANDWIDTH	28480	08565-00005
A2MP83	08565-00006	2	DETENT, FREQ. SPAN	28480	08565-00006
A2MP84	08565-20009	1	ROTOR	28480	08565-20009
A2MP85	08565-20044	1	SHAFT, RES BW	28480	08565-20044
A2MP86	08565-20045	1	SHAFT, REFERENCE LEVEL	28480	08565-20045
A2MP87	08565-20046	1	SHAFT, FIXED	28480	08565-20046
A2MP88	08565-20049	2	BUSHING, FREQ. SPAN	28480	08565-20049
A2MP89	08565-20049		BUSHING, FREQ. SPAN	28480	08565-20049
A2MP90	08565-20050	1	NUT, POINT/RETAINER	28480	08565-20050
A2MP91	08565-20094	1	ROTOR, BANDWIDTH	28480	08565-20094
A2MP92	2200-0155	1	SCREW-MACH 4-40 1-IN-LG PAN-HD-POZI	28480	2200-0155
A2MP93	2200-0165	2	SCREW-MACH 4-40 .25-IN-LG 82 DEG	28480	2200-0165
A2MP94	2200-0165		SCREW-MACH 4-40 .25-IN-LG 82 DEG	28480	2200-0165
A2MP95	2200-0509	2	SCREW-MACH 4-40 1.625-IN-LG PAN-HD-POZI	28480	2200-0509
A2MP96	2200-0509		SCREW-MACH 4-40 1.625-IN-LG PAN-HD-POZI	28480	2200-0509
A2MP97	2200-0558	1	SCREW-MINTR 4.40 2.25-IN-LG PAN-HD-POZI	28480	2200-0558
A2MP98	2200-0781	3	SCREW-MACH 4-40 2.75-IN-LG PAN-HD-POZI	28480	2200-0781
A2MP99	2200-0781		SCREW-MACH 4-40 2.75-IN-LG PAN-HD-POZI	28480	2200-0781
A2MP100	2200-0781		SCREW-MACH 4-40 2.75-IN-LG PAN-HD-POZI	28480	2200-0781
A2MP101 THRU 104			NOT ASSIGNED		
A2MP105	0380-0440	1	SPACER-RND .75LG .129ID .1880D BRS	76854	2295-448
A2MP106	0380-0441	1	SPACER-RND .875LG .129ID .1880D BRS	76854	2295-456
A2MP107	0510-0089	1	RETAINER-RING BSC EXT .188-DIA BE-CU	0573B	3100-18-BC-CD
A2MP108	1410-0006	5	BALL BEARING TYPE, 0.1875" DIA	7870G	GRADE 50 TYPE 440C
A2MP109	1410-0006		BALL BEARING TYPE, 0.1875" DIA	7870G	GRADE 50 TYPE 440C
A2MP110	1410-0006		BALL BEARING TYPE, 0.1875" DIA	7870G	GRADE 50 TYPE 440C
A2MP111	1410-0006		BALL BEARING TYPE, 0.1875" DIA	7870G	GRADE 50 TYPE 440C

Scans by ARTEK MEDIA =>

Table 6-2. Replaceable Parts

Reference Designation	HP Part Number	Qty	Description	Mfr Code	Mfr Part Number
A2MP112	1410-0730	2	BUSHING-PNL .127-ID .375-LG 1/4-28-THD	0447E	1818-1
A2MP113	1460-0532	1	SPRING-CPRSN .54-IN-OD .45-IN-LG MUW	28480	1460-0532
A2MP114	1460-0578	5	SPRING-CPRSN .18-IN-OD .312-IN-LG MUW	28480	1460-0578
A2MP115	1460-0578		SPRING-CPRSN .18-IN-OD .312-IN-LG MUW	28480	1460-0578
A2MP116	1460-0578		SPRING-CPRSN .18-IN-OD .312-IN-LG MUW	28480	1460-0578
A2MP117	1460-0578		SPRING-CPRSN .18-IN-OD.312-IN-LG MUW	28480	1460-0578
A2MP118	1460-1376	1	SPRING-TRSN MUW	28480	1460-1376
A2MP119	2950-0006	1	NUT-HEX-DBL-CHAM 1/4-32-THD .094-IN-THK	0460D	9000
A2MP120	2950-0043	4	NUT-HEX-DBL-CHAM 3/8-32-THD .094-IN-THK	28480	2950-0043
A2MP121	2950-0043		NUT-HEX-DBL-CHAM 3/8-32-THD .094-IN-THK	28480	2950-0043
A2MP122	2950-0043		NUT-HEX-DBL-CHAM3/8-32-THD .094-IN-THK	28480	2950-0043
A2MP123	2950-0043		NUT-HEX-DBL-CHAM 3/8-32-THD .094-IN-THK	28480	2950-0043
A2MP124	2950-0051	2	NUT-HEX-DBL-CHAM 1/4-28-THD .094-IN-THK	28480	2950-0051
A2MP125 THRU A2MP138	3030-0007	16	SCREW-SET 4-40 .125-IN-LG SMALL CUP-PT	28480	3030-0007
A2MP139	2190-0027	2	WASHER-LK INTL T 1/4 IN .256-IN-ID	78189	1914-00
A2MP140	2190-0027		WASHER-LK INTL T 1/4 IN .256-IN-ID	78189	1914-00
A2MP141	2190-0368	5	WASHER-FL MTLC NO. 5 .13-IN-ID	28480	2190-0368
A2MP142	2190-0368		WASHER-FL MTLC NO. 5 .13-IN-ID	28480	2190-0368
A2MP143	2200-0101	10	SCREW-MACH 4-40 .188-IN-LG PAN-HD-POZI	28480	2200-0101
A2MP144	2200-0101		SCREW-MACH 4-40 .188-IN-LG PAN-HD-POZI	28480	2200-0101
A2MP145	2200-0101		SCREW-MACH 4-40 .188-IN-LG PAN-HD-POZI	28480	2200-0101
A2MP146	2200-0101		SCREW-MACH 4-40 .188-IN-LG PAN-HD-POZI	28480	2200-0101
A2MP147	2200-0101		SCREW-MACH 4-40 .188-IN-LG PAN-HD-POZI	28480	2200-0101
A2MP148	2200-0101		SCREW-MACH 4-40 .188-IN-LG PAN-HD-POZI	28480	2200-0101
A2MP149	2200-0101		SCREW-MACH 4-40 .188-IN-LG PAN-HD-POZI	28480	2200-0101
A2MP150	2200-0101		SCREW-MACH 4-40 .188-IN-LG PAN-HD-POZI	28480	2200-0101
A2MP151	2200-0101		SCREW-MACH 4-40 .188-IN-LG PAN-HD-POZI	28480	2200-0101
A2MP152	2200-0101		SCREW-MACH 4-40 .188-IN-LG PAN-HD-POZI	28480	2200-0101
A2MP153	2200-0109	14	SCREW-MACH 4-40 .438-IN-LG PAN-HD-POZI	28480	2200-0109
A2MP154	2200-0109		SCREW-MACH 4-40 .438-IN-LG PAN-HD-POZI	28480	2200-0109
A2MP155	2200-0109		SCREW-MACH 4-40 .438-IN-LG PAN-HD-POZI	28480	2200-0109
A2MP156	2200-0109		SCREW-MACH 4-40 .438-IN-LG PAN-HD-POZI	28480	2200-0109
A2MP157	2200-0151	6	SCREW-MACH 4-40 .75-IN-LG PAN-HD-POZI	28480	2200-0151
A2MP158	2200-0151		SCREW-MACH 4-40 .75-IN-LG PAN-HD-POZI	28480	2200-0151
A2MP159	2200-0151		SCREW-MACH 4-40 .75-IN-LG PAN-HD-POZI	28480	2200-0151
A2MP160	0380-0034	3	SPACER-RND .312LG .116ID .1880D BRS	28480	0380-0034
A2MP161	0380-0034		SPACER-RND .312LG .116ID .1880D BRS	28480	0380-0034
A2MP162	0380-0034		SPACER-RND .312LG .116ID .1880D BRS	28480	0380-0034
A2MP163 THRU A2MP172	0380-0411	12	SPACER-RND .5LG .114ID .1540D BRS	76854	3-5162-111
A2MP173 THRU A2MP189	2260-0001	19	NUT-HEX-DBL-CHAM 4-40-THD .094-IN-THK	28480	2260-0001
A2MP190	2260-0002	17	NUT-HEX-DBL-CHAM 4-40-THD .062-IN-THK	28480	2260-0002
A2MP191 THRU A2MP198	1480-0059	8	PIN: SPRING 0.062" NOM. DIA	0000J	0BD
A2MP199	1480-0367	1	PIN, DOWEL 303 SST	0000J	0BD
A2MP200	2190-0016	3	WASHER-LK INTL T 3/8 IN .377-IN-ID	28480	2190-0016
A2MP201	2190-0016		WASHER-LK INTL T 3/8 IN .377-IN-ID	28480	2190-0016
A2MP202 THRU A2MP209	2190-0019	10	WASHER-LK HLCL NO. 4 .115-IN-ID	28480	2190-0019
A2R1	2100-3625	1	RESISTOR-VAR CONTROL WW 10K 5% LIN	0258B	49M
A2A1	08565-60002	1	ASSEMBLY, FRONT SWITCH	28480	08565-60002
A2A1CR1 THRU A2A1CR28	1901-0050		DIODE-SWITCHING 80V 200MA 2NS DO-7	28480	1901-0050
A2A1DS1	1990-0485	2	LED-VISIBLE LUM-INT=800UCD IF=30MA-MAX	28480	1990-0485
A2A1DS2	1990-0485		LED-VISIBLE LUM-INT=800UCD IF=30MA-MAX	28480	1990-0485
A2A1DS3	1990-0487	9	LED-VISIBLE LUM-INT=IMCD IF=20MA-MAX	28480	1990-0487

Scans by ARTEK MEDIA =>

Table 6-2. Replaceable Parts

Reference Designation	HP Part Number	Qty	Description	Mfr Code	Mfr Part Number
A2A1J1	1251-3906	1	CONNECTOR 50-PIN M RECTANGULAR	76381	3433-2003
A2A1J2	1251-3025	1	CONNECTOR 34-PIN M RECTANGULAR	76381	3431-2002
A2A1R1	2100-3635	1	RESISTOR-VAR CONTROL CP 100K 10% LIN	28480	2100-3635
A2A1R2	2100-3631		RESISTOR-VAR CONTROL CP 10K 10% LIN	28480	2100-3631
A2A1R3	0757-0814	1	RESISTOR 511 1% .5W F TC=0+-100	0299E	MF7C1/2-T0-511R-F
A2A1R4	0757-0465	90	RESISTOR 100K 1% .125W F TC=0+-100	0329B	C4-1/8-T0-1003-F
A2A1R5			NOT ASSIGNED		
A2A1R6	2100-3631		RESISTOR-VAR CONTROL CP 10K 10% LIN	28480	2100-3631
A2A1R7	2100-3631		RESISTOR-VAR CONTROL CP 10K 10% LIN	28480	2100-3631
A2A1R8	0757-0198	1	RESISTOR 100 1% .5W F TC=0+-100	0299E	MF7C1/2-T0-101-F
A2A1R9	2100-3650	1	RESISTOR-VAR CONTROL CP 10K 10% LIN	28480	2100-3650
A2A1R10	0698-3444	26	RESISTOR 316 1% .125W F TC=0+-100	0329B	C4-1/8-T0-316R-F
A2A1R11	2100-3651	1	RESISTOR-VAR CONTROL CP 2K 10% LIN	28480	2100-3651
A2A1R12	0698-0084	13	RESISTOR 2.15K 1% .125W F TC=0+-100	0329B	C4-1/8-T0-2151-F
A2A1S1	3101-2124	1	SWITCH-PB DPDT ALTNG	28480	3101-2124
A2A1S2	3101-2186	1	SWITCH-PB 3-STATION 10MM C-C SPACING	28480	3101-2186
A2A1S3	3101-2182	2	SWITCH-PB 5-STATION 10MM C-C SPACING	28480	3101-2182
A2A1S4	3101-2181	1	SWITCH-PB 5-STATION 10MM C-C SPACING	28480	3101-2181
A2A1S5	3101-2182		SWITCH-PB 5-STATION 10MM C-C SPACING	28480	3101-2182
A2A1S6	3101-2184	1	SWITCH-PB 8-STATION 15MM C-C SPACING	28480	3101-2184
A2A1S7	3101-2189		SWITCH-PB DPDT MOM .125A 28VAC	28480	3101-2189
A2A1XDS1	1200-0010	3	SOCKET-TUBE 2-CONT	0450G	131-52-12-016
A2A1XDS2	1200-0010		SOCKET-TUBE 2-CONT	0450G	131-52-12-016
A2A1XDS3	1200-0010		SOCKET-TUBE 2-CONT	0450G	131-52-12-016
A2A2	08565-60003	1	ASSEMBLY, FREQUENCY DISPLAY	28480	08565-60003
A2A2DS1	1990-0513	5	DISPLAY-NUM SEG 1-CHAR .3-H GA-ARSD-PPHD	28480	1990-0513
A2A2DS2	1990-0513		DISPLAY-NUM SEG 1-CHAR .3-H GA-ARSD-PPHD	28480	1990-0513
A2A2DS3	1990-0513		DISPLAY-NUM SEG 1-CHAR .3-H GA-ARSD-PPHD	28480	1990-0513
A2A2DS4	1990-0513		DISPLAY-NUM SEG 1-CHAR .3-H GA-ARSD-PPHD	28480	1990-0513
A2A2DS5	1990-0513		DISPLAY-NUM SEG 1-CHAR .3-H GA-ARSD-PPHD	28480	1990-0513
A2A2J1	1200-0507		SOCKET-IC 16-CONT DIP-SLDR	06776	0002811
A2A2R1	0757-0180	16	RESISTOR 31.6 1% .125W F TC=0+-100	0160G	CC
A2A2R2	0757-0180		RESISTOR 31.6 1% .125W F TC=0+-100	0160G	CC
A2A2R3	0757-0180		RESISTOR 31.6 1% .125W F TC=0+-100	0160G	CC
A2A2R4	0757-0180		RESISTOR 31.6 1% .125W F TC=0+-100	0160G	CC
A2A2R5	0757-0180		RESISTOR 31.6 1% .125W F TC=0+-100	0160G	CC
A2A2R6	0757-0180		RESISTOR 31.6 1% .125W F TC=0+-100	0160G	CC
A2A2R7	0757-0180		RESISTOR 31.6 1% .125W F TC=0+-100	0160G	CC
A2A2R8	0757-0180		RESISTOR 31.6 1% .125W F TC=0+-100	0160G	CC
A2A2XDS1	1200-0508	6	SOCKET-IC 14-CONT DIP-SLDR	06776	0002812
A2A2XDS2	1200-0508		SOCKET-IC 14-CONT DIP-SLDR	06776	0002812
A2A2XDS3	1200-0508		SOCKET-IC 14-CONT DIP-SLDR	06776	0002812
A2A2XDS4	1200-0508		SOCKET-IC 14-CONT DIP-SLDR	06776	0002812
A2A2XDS5	1200-0508		SOCKET-IC 14-CONT DIP-SLDR	06776	0002812
A2A3	08565-60006	1	ASSEMBLY, TUNING	28480	08565-60006
A2A3MP1	08565-20098	1	PLATE, T/M FRONT	28480	08565-20098
A2A3MP2	08565-20099	1	PLATE, T/M REAR	28480	08565-20099
A2A3MP3	08565-00021	1	BRACKET, FINE TUNE	28480	08565-00021
A2A3MP4	08565-20041	1	SHAFT, COARSE TUNE	28480	08565-20041
A2A3MP5	08565-20042	1	SHAFT, FINE TUNE	28480	08565-20042
A2A3MP6	08555-20095	1	CLUTCH, PINION ASSEMBLY	28480	08555-20095
A2A3MP7	08555-20096	1	GEAR, PINION ASSEMBLY	28480	08555-20096
A2A3MP8	08555-20020	1	PINION, 30 TEETH	28480	08555-20020
A2A3MP9	08555-20013	1	CONE DRIVE	28480	08555-20013
A2A3MP10	08555-20011	1	BEARING, REAR	28480	08555-20011
A2A3MP11	08555-20005	1	GEAR, CLUTCH & DIAL	28480	08555-20005
A2A3MP12	08565-20048	3	STANDOFF	28480	08565-20048
A2A3MP13	08565-20048		STANDOFF	28480	08565-20048
A2A3MP14	08565-20048		STANDOFF	28480	08565-20048
A2A3MP15	0510-0028	1	RETAINER-RING BSC EXT .375-DIA STL	05738	3100-37-ST-CD
A2A3MP16	0510-0035	2	RETAINER-RING BWD EXT .375-DIA STL	05738	3101-37-ST-CD
A2A3MP17	0510-0035		RETAINER-RING BWD EXT .375-DIA STL	05738	3101-37-ST-CD
A2A3MP18	0510-0082	2	RETAINER-RING BSC EXT .125-DIA BE-CU	05738	3100-12-BC
A2A3MP19	0510-0082		RETAINER-RING BSC EXT .125-DIA BE-CU	05738	3100-12-BC
A2A3MP20	0510-1140	1	RETAINER-RING "C"-RND EXT .312-DIA STL	28480	0510-1140
A2A3MP21	1410-0226	4	BALL BEARING;STL 0.09375" DIA	0000J	OBD
A2A3MP22	1410-0226		BALL BEARING;STL 0.09375" DIA	0000J	OBD
A2A3MP23	1410-0226		BALL BEARING;STL 0.09375" DIA	0000J	OBD
A2A3MP24	1410-0226		BALL BEARING;STL 0.09375" DIA	0000J	OBD
A2A3MP25	1430-0713	2		28480	1430-0713

See introduction to this section for ordering information

Scans by ARTEK MEDIA =>

Table 6-2. Replaceable Parts

Reference Designation	HP Part Number	Qty	Description	Mfr Code	Mfr Part Number
A2A3MP26	1430-0713			28480	1430-0713
A2A3MP27	1460-1213	4	SPRING-CPRSN .088-IN-OD .33-IN-LG MUW	28480	1460-1213
A2A3MP28	1460-1213		SPRING-CPRSN .088-IN-OD .33-IN-LG MUW	28480	1460-1213
A2A3MP29	1460-1213		SPRING-CPRSN .088-IN-OD .33-IN-LG MUW	28480	1460-1213
A2A3MP30	1460-1213		SPRING-CPRSN .088-IN-OD .33-IN-LG MUW	28480	1460-1213
A2A3MP31	2190-0368		WASHER-FL MTLC NO. 5 .13-IN-ID	28480	2190-0368
A2A3MP32	2190-0368		WASHER-FL MTLC NO. 5 .13-IN-ID	28480	2190-0368
A2A3MP33	2190-0926	1	WASHER-SPR CRVD NO. 5 .14-IN-ID	78189	3502-05-21-0541
A2A3MP34	2200-0103	46	SCREW-MACH 4-40 .25-IN-LG PAN-HD-POZI	28480	2200-0103
A2A3MP35	2200-0103		SCREW-MACH 4-40 .25-IN-LG PAN-HD-POZI	28480	2200-0103
A2A3MP36	2360-0135	3	SCREW-MACH 6-32 1.5-IN-LG PAN-HD-POZI	28480	2360-0135
A2A3MP37	2360-0135		SCREW-MACH 6-32 1.5-IN-LG PAN-HD-POZI	28480	2360-0135
A2A3MP38	2360-0135		SCREW-MACH 6-32 1.5-IN-LG PAN-HD-POZI	28480	2360-0135
A2A3MP39	2420-0001	3	NUT-HEX-W/LKWR 6-32-THD .109-IN-THK	28480	2420-0001
A2A3MP40	2420-0001		NUT-HEX-W/LKWR 6-32-THD .109-IN-THK	28480	2420-0001
A2A3MP41	2420-0001		NUT-HEX-W/LKWR 6-32-THD .109-IN-THK	28480	2420-0001
A2A3MP42	3030-0014	10	SCREW-SET 4-40 .125-IN-LG FLAT-PT ALY	28480	3030-0014
A2A3MP43	3030-0014		SCREW-SET 4-40 .125-IN-LG FLAT-PT ALY	28480	3030-0014
A2A3MP44	3030-0014		SCREW-SET 4-40 .125-IN-LG FLAT-PT ALY	28480	3030-0014
A2A3MP45	3030-0014		SCREW-SET 4-40 .125-IN-LG FLAT-PT ALY	28480	3030-0014
A2A3MP46	3030-0014		SCREW-SET 4-40 .125-IN-LG FLAT-PT ALY	28480	3030-0014
A2A3MP47	3030-0014		SCREW-SET 4-40 .125-IN-LG FLAT-PT ALY	28480	3030-0014
A2A3MP48	3030-0014		SCREW-SET 4-40 .125-IN-LG FLAT-PT ALY	28480	3030-0014
A2A3MP49	3030-0014		SCREW-SET 4-40 .125-IN-LG FLAT-PT ALY	28480	3030-0014
A2A3MP50	3030-0014		SCREW-SET 4-40 .125-IN-LG FLAT-PT ALY	28480	3030-0014
A2A3MP51	3030-0014		SCREW-SET 4-40 .125-IN-LG FLAT-PT ALY	28480	3030-0014
A2A3MP52	3050-0029	3	WASHER-FL MTLC 3/8 IN .378-IN-ID	28480	3050-0029
A2A3MP53	3050-0029		WASHER-FL MTLC 3/8 IN .378-IN-ID	28480	3050-0029
A2A3MP54	3050-0029		WASHER-FL MTLC 3/8 IN .378-IN-ID	28480	3050-0029
A2A3MP55	3050-0153	3	WASHER-FL MTLC 1/4 IN .26-IN-ID	28480	3050-0153
A2A3MP56	3050-0153		WASHER-FL MTLC 1/4 IN .26-IN-ID	28480	3050-0153
A2A3MP57	3050-0153		WASHER-FL MTLC 1/4 IN .26-IN-ID	28480	3050-0153
A2A3R1	2100-3615	1	RESISTOR-VAR PREC W/CP 10-TRN 10K 10%	28480	2100-3615
A2A3R2	2100-3621	1	RESISTOR-VAR PREC WW 10-TRN 10K 1%	01686E	534-9856
A2A3R3	2100-3614	1	RESISTOR-VAR PREC W/CP 3-TRN 15K 10%	28480	2100-3614
A2A3W1	08565-60083	1	CABLE ASSEMBLY, TUNING	28480	08565-60083
A2A4	08565-60004	1	ASSEMBLY, REAR SWITCH	28480	08565-60004
A2A4J1	1251-4736	4	CONNECTOR 26-PIN M RECTANGULAR	76381	3493-2003
A2A4MP1	08565-00006		DETENT, FREQUENCY SPAN	28480	08565-00006
A2A4MP2	08565-20055	1	BUSHING	28480	08565-20055
A2A4MP3	08565-20056	1	SHAFT, SWEEP TIME	28480	08565-20056
A2A4MP4	08565-20095	1	ROTOR, SWEEP TIME	28480	08565-20095
A2A4MP5	5020-0324	1	SHAFT	28480	5020-0324
A2A4MP6	08558-20059		HUB DRIVE	28480	08558-20059
A2A4MP7	0380-0411		SPACER-RND .5LG .114ID .1540D BRS	76854	3-5162-111
A2A4MP8	0380-0411		SPACER-RND .5LG .114ID .1540D BRS	76854	3-5162-111
A2A4MP9	0510-0015	1	RETAINER-RING E-R EXT .125-DIA STL	05738	1000-12-ST-CD
A2A4MP10	1410-0006		BALL BEARING TYPE, 0.1875" DIA	7870G	GRADE 50 TYPE 440C
A2A4MP11	1410-0730		BUSHING-PNL .127-ID .375-LG 1/4-28-THD	0447E	1818-1
A2A4MP12	1430-0555	2	GEAR, SPUR 48 TEETH	28480	1430-0555
A2A4MP13	1430-0555		GEAR, SPUR 48 TEETH	28480	1430-0555
A2A4MP14	1460-0578		SPRING-CPRSN .18-IN-OD .312-IN-LG MUW	28480	1460-0578
A2A4MP15	2190-0016		WASHER-LK INTL T 3/8 IN .377-IN-ID	28480	2190-0016
A2A4MP16	2190-0019		WASHER-LK HLCL NO. 4 .115-IN-ID	28480	2190-0019
A2A4MP17	2190-0019		WASHER-LK HLCL NO. 4 .115-IN-ID	28480	2190-0019
A2A4MP18	2190-0368		WASHER-FL MTLC NO. 5 .13-IN-ID	28480	2190-0368
A2A4MP19	2200-0151		SCREW-MACH 4-40 .75-IN-LG PAN-HD-POZI	28480	2200-0151
A2A4MP20	2200-0151		SCREW-MACH 4-40 .75-IN-LG PAN-HD-POZI	28480	2200-0151
A2A4MP21	2260-0001		NUT-HEX-DBL-CHAM 4-40-THD .094-IN-THK	28480	2260-0001
A2A4MP22	2260-0001		NUT-HEX-DBL-CHAM 4-40-THD .094-IN-THK	28480	2260-0001
A2A4MP23	2950-0001	1	NUT-HEX-DBL-CHAM 3/8-32-THD .094-IN-THK	28480	2950-0001
A2A4MP24	2950-0051		NUT-HEX-DBL-CHAM 1/4-28-THD .094-IN-THK	28480	2950-0051
A2A4MP25	3030-0007		SCREW-SET 4-40 .125-IN-LG SMALL CUP-PT	28480	3030-0007
A2A4MP26	3030-0007		SCREW-SET 4-40 .125-IN-LG SMALL CUP-PT	28480	3030-0007
A2A4MP27	3050-0028	1	WASHER-FL MTLC NO. 12 .25-IN-ID	28480	3050-0028
A2A5	08565-60005	1	ASSEMBLY, REFERENCE LEVEL ENCODER	28480	08565-60005
A2A5MP1	08654-20054	1	ROTOR ASSEMBLY, PC	28480	08654-20054
A2A5MP2	08565-20058	1	HUB, ROTARY SWITCH	28480	08565-20058
A2A5MP3	3050-0161	1	WASHER-SPR WAVY 1/4 IN .265-IN-ID	0442F	R-2
A2A5MP4	3050-0156	3	WASHER-FL MTLC NO. 12 .25-IN-ID	28480	3050-0156
A2A5MP5	3050-0156		WASHER-FL MTLC NO. 12 .25-IN-ID	28480	3050-0156

See introduction to this section for ordering information

Scans by ARTEK MEDIA =>

Table 6-2. Replaceable Parts

Reference Designation	HP Part Number	Qty	Description	Mfr Code	Mfr Part Number
A2A5MP6	3050-0156		WASHER-FL MTLC NO. 12 .25-IN-ID	28480	3050-0156
A2A5MP7	0510-0005	1	RETAINER-RING 88C EXT .25-DIA STL	28480	0510-0005
A3	08565-60038	1	ASSEMBLY, DISPLAY ADJUST	28480	08565-60038
A3R1	2100-3628	1	RESISTOR-VAR CONTROL CP 50K 10% LIN	28480	2100-3628
A3R2	2100-3629	3	RESISTOR-VAR CONTROL CP 5K 10% LIN	28480	2100-3629
A3R3	2100-3629		RESISTOR-VAR CONTROL CP 5K 10% LIN	28480	2100-3629
A3R4	2100-3629		RESISTOR-VAR CONTROL CP 5K 10% LIN	28480	2100-3629
A4	08565-60053	1	ASSEMBLY, Z-AXIS AMPLIFIER	28480	08565-60053
A4C1	0180-0374	6	CAPACITOR-FXD 10UF+-10% 20VDC TA	0420J	150D106X902082
A4C2	0180-0374		CAPACITOR-FXD 10UF+-10% 20VDC TA	0420J	150D106X902082
A4C3	0160-3670	9	CAPACITOR-FXD .1UF +-20% 200VDC CER	28480	0160-3670
A4C4	0180-0197		CAPACITOR-FXD 2.2UF+-10% 20VDC TA	0420J	1500225X9020A2
A4C5	0160-2055	222	CAPACITOR-FXD .01UF +80-20% 100VDC CER	28480	0160-2055
A4C6	0160-2308	2	CAPACITOR-FXD 36PF +-5% 300VDC	28480	0160-2308
A4C7	0160-2055		CAPACITOR-FXD .01UF +80-20% 100VDC CER	28480	0160-2055
A4C8	0121-0474	1	CAPACITOR-V TRMR-PSTN .3-1.5PF 600V	28480	0121-0474
A4C9	0160-2055		CAPACITOR-FXD .01UF +80-20% 100VDC CER	28480	0160-2055
A4C10	0160-3670		CAPACITOR-FXD .1UF +-20% 200VDC CER	28480	0160-3670
A4C11	0160-3670		CAPACITOR-FXD .1UF +-20% 200VDC CER	28480	0160-3670
A4C12	0160-3670		CAPACITOR-FXD .1UF +-20% 200VDC CER	28480	0160-3670
A4C13	0160-3670		CAPACITOR-FXD .1UF +-20% 200VDC CER	28480	0160-3670
A4CR1	1901-0518	6	DIODE-SCHOTTKY	28480	1901-0518
A4CR2	1901-0050		DIODE-SWITCHING 80V 200MA 2NS DO-7	28480	1901-0050
A4CR3	1901-0518		DIODE-SCHOTTKY	28480	1901-0518
A4CR4	1901-0050		DIODE-SWITCHING 80V 200MA 2NS DO-7	28480	1901-0050
A4CR5	1901-0096	2	DIODE-SWITCHING 120V 50MA 100NS	28480	1901-0096
A4CR6	1901-0028	8	DIODE-PWR RECT 400V 750MA DO-29	0271C	MP493
A4CR7	1901-0028		DIODE-PWR RECT 400V 750MA DO-29	0271C	MP493
A4CR8	1901-0518		DIODE-SCHOTTKY	28480	1901-0518
A4CR9	1901-0050		DIODE-SWITCHING 80V 200MA 2NS DO-7	28480	1901-0050
A4CR10	1901-0050		DIODE-SWITCHING 80V 200MA 2NS DO-7	28480	1901-0050
A4CR11	1901-0518		DIODE-SCHOTTKY	28480	1901-0518
A4CR12	1901-0050		DIODE-SWITCHING 80V 200MA 2NS DO-7	28480	1901-0050
A4L1	9140-0210	27	COIL-MLD 100UH 5% Q=50 .155DX.375LG	02178	15-1315-12J
A4L2	9140-0210		COIL-MLD 100UH 5% Q=50 .155DX.375LG	02178	15-1315-12J
A4L3	9140-0210		COIL-MLD 100UH 5% Q=50 .155DX.375LG	02178	15-1315-12J
A4MP1	1200-0185		INSULATOR-XSTR NYLON	0260H	7717-86N RED
A4MP2	1200-0185		INSULATOR-XSTR NYLON	0260H	7717-86N RED
A4MP3	1200-0185		INSULATOR-XSTR NYLON	0260H	7717-86N RED
A4MP4	1205-0095		HEAT SINK TO-5/TO-39-PKG	28480	1205-0095
A4MP5	1205-0095		HEAT SINK TO-5/TO-39-PKG	28480	1205-0095
A4MP6	1480-0073	25	PIN:DRIVE 0.250" LG	0000J	DBD
A4MP7	4040-0751	2	EXTRACTOR-PC BOARD ORN POLYC	28480	4040-0751
A4Q1	1853-0038	7	TRANSISTOR PNP SI TO-39 PD=1W FT=100MHZ	28480	1853-0038
A4Q2	1854-0419	1	TRANSISTOR NPN SI TO-39 PD=1W FT=200MHZ	28480	1854-0419
A4Q3	1854-0404	162	TRANSISTOR NPN SI TO-18 PD=360MW	28480	1854-0404
A4Q4	1853-0036	1	TRANSISTOR PNP SI PD=310MW FT=250MHZ	28480	1853-0036
A4Q5	1854-0404		TRANSISTOR NPN SI TO-18 PD=360MW	28480	1854-0404
A4Q6	1855-0327	2	TRANSISTOR J-FET 2N4416 N-CHAN D-MODE	0169H	2N4416
A4Q7	1855-0327		TRANSISTOR J-FET 2N4416 N-CHAN D-MODE	0169H	2N4416
A4Q8	1853-0007	62	TRANSISTOR PNP 2N3251 SI TO-18 PD=360MW	0203G	2N3251
A4Q9	1853-0007		TRANSISTOR PNP 2N3251 SI TO-18 PD=360MW	0203G	2N3251
A4Q10	1854-0404		TRANSISTOR NPN SI TO-18 PD=360MW	28480	1854-0404
A4Q11	1854-0039	2	TRANSISTOR NPN 2N3053S SI TO-39 PD=1W	0203G	2N3053
A4R1	0757-0442		RESISTOR 10K 1% .125W F TC=0+-100	03298	C4-1/8-T0-1002-F
A4R2	0698-3450	26	RESISTOR 42.2K 1% .125W F TC=0+-100	03298	C4-1/8-T0-4222-F
A4R3	0698-3156		RESISTOR 14.7K 1% .125W F TC=0+-100	03298	C4-1/8-T0-1472-F
A4R4	0757-0458	22	RESISTOR 51.1K 1% .125W F TC=0+-100	03298	C4-1/8-T0-5112-F
A4R5	0757-0441	7	RESISTOR 8.25K 1% .125W F TC=0+-100	03298	C4-1/8-T0-8251-F
A4R6	0757-1094	8	RESISTOR 1.47K 1% .125W F TC=0+-100	03298	C4-1/8-T0-1471-F
A4R7	0757-0839	2	RESISTOR 10K 1% .5W F TC=0+-100	0299E	MF7C1/2-T0-1002-F
A4R8	0757-0442		RESISTOR 10K 1% .125W F TC=0+-100	03298	C4-1/8-T0-1002-F
A4R9	0757-0442		RESISTOR 10K 1% .125W F TC=0+-100	03298	C4-1/8-T0-1002-F
A4R10	0698-0082	3	RESISTOR 464 1% .125W F TC=0+-100	03298	C4-1/8-T0-4640-F
A4R11	0757-0199	182	RESISTOR 21.5K 1% .125W F TC=0+-100	03298	C4-1/8-T0-2152-F
A4R12	0757-0199		RESISTOR 21.5K 1% .125W F TC=0+-100	03298	C4-1/8-T0-2152-F
A4R13	0757-0442		RESISTOR 10K 1% .125W F TC=0+-100	03298	C4-1/8-T0-1002-F
A4R14	0757-0280		RESISTOR 1K 1% .125W F TC=0+-100	03298	C4-1/8-T0-1001-F
A4R15	0698-3156		RESISTOR 14.7K 1% .125W F TC=0+-100	03298	C4-1/8-T0-1472-F

See introduction to this section for ordering information

Scans by ARTEK MEDIA =>

Table 6-2. Replaceable Parts

Reference Designation	HP Part Number	Qty	Description	Mfr Code	Mfr Part Number
A4R16	0757-0442		RESISTOR 10K 1% .125W F TC=0+-100	0329B	C4-1/8-T0-1002-F
A4R17	0757-0280		RESISTOR 1K 1% .125W F TC=0+-100	0329B	C4-1/8-T0-1001-F
A4R18	2100-3207	2	RESISTOR-TRMR 5K 10% C SIDE-ADJ 1-TRN	7313A	72-145-0
A4R19	0698-3162	13	RESISTOR 46.4K 1% .125W F TC=0+-100	0329B	C4-1/8-T0-4642-F
A4R20	0698-3152	8	RESISTOR 3.48K 1% .125W F TC=0+-100	0329B	C4-1/8-T0-3481-F
A4R21	0698-3418	1	RESISTOR 26.1K 1% .5W F TC=0+-100	0552D	CMF-65-2
A4R22	0757-0839		RESISTOR 10K 1% .5W F TC=0+-100	0299E	MF7C1/2-T0-1002-F
A4R23	0757-0199		RESISTOR 21.5K 1% .125W F TC=0+-100	0329B	C4-1/8-T0-2152-F
A4R24	0757-0346	46	RESISTOR 10 1% .125W F TC=0+-100	0329B	C4-1/8-T0-10R0-F
A4R25	0757-0346		RESISTOR 10 1% .125W F TC=0+-100	0329B	C4-1/8-T0-10R0-F
A4R26	0698-3413	2	RESISTOR 13.3K 1% .5W F TC=0+-100	0552D	CMF-65-2
A4R27	0698-3413		RESISTOR 13.3K 1% .5W F TC=0+-100	0552D	CMF-65-2
A4R28	0757-0424	3	RESISTOR 1.1K 1% .125W F TC=0+-100	0329B	C4-1/8-T0-1101-F
A4R29	0757-0465		RESISTOR 100K 1% .125W F TC=0+-100	0329B	C4-1/8-T0-1003-F
A4R30	0757-0279		RESISTOR 3.16K 1% .125W F TC=0+-100	0329B	C4-1/8-T0-3161-F
A4R31	0757-0279		RESISTOR 3.16K 1% .125W F TC=0+-100	0329B	C4-1/8-T0-3161-F
A4R32	0757-0279		RESISTOR 3.16K 1% .125W F TC=0+-100	0329B	C4-1/8-T0-3161-F
A4R33	0698-3455	2	RESISTOR 261K 1% .125W F TC=0+-100	0329B	C4-1/8-T0-2613-F
A4R34	0757-0442		RESISTOR 10K 1% .125W F TC=0+-100	0329B	C4-1/8-T0-1002-F
A4U1	1820-1208	1	IC GATE TTL LS OR QUAD 2-INP	0291J	74LS32A
A4U2	1820-1144	5	IC GATE TTL LS NOR QUAD 2-INP	0223G	9LS02PC
A4U3	1820-1199	1	IC INV TTL LS HEX 1-INP	0169H	SN74LS04N
A4VR1			NOT ASSIGNED		
A4VR2	1902-3203	2	DIODE-ZNR 14.7V 5% DO-7 PD=.4W TC=+.057%	0223G	FZ7206
A4VR3	1902-3234	1	DIODE-ZNR 19.6V 5% DO-7 PD=.4W TC=+.073%	0223G	FZ7288
A5	08565-60052	2	ASSEMBLY, Y-DEFLECTION AMPLIFIER	28480	08565-60052
A5C1	0180-0374		CAPACITOR-FXD 10UF+-10% 20VDC TA	0420J	150D106X9020B2
A5C2	0180-0374		CAPACITOR-FXD 10UF+-10% 20VDC TA	0420J	150D106X9020B2
A5C3	0160-4084	17	CAPACITOR-FXD .1UF +-20% 50VDC CER	28480	0160-4084
A5C4	0160-4084		CAPACITOR-FXD .1UF +-20% 50VDC CER	28480	0160-4084
A5C5	0160-4084		CAPACITOR-FXD .1UF +-20% 50VDC CER	28480	0160-4084
A5C6	0160-4084		CAPACITOR-FXD .1UF +-20% 50VDC CER	28480	0160-4084
A5C7	0160-2055		CAPACITOR-FXD .01UF +80-20% 100VDC CER	28480	0160-2055
A5C8	0160-2055		CAPACITOR-FXD .01UF +80-20% 100VDC CER	28480	0160-2055
A5C9	0160-3533	4	CAPACITOR-FXD 470PF +-5% 300VDC MICA0+70	28480	0160-3533
A5C10	0160-2236	10	CAPACITOR-FXD 1PF +-.25PF 500VDC	28480	0160-2236
A5C11	0160-2236		CAPACITOR-FXD 1PF +-.25PF 500VDC	28480	0160-2236
A5C12	0160-2055		CAPACITOR-FXD .01UF +80-20% 100VDC CER	28480	0160-2055
A5C13	0160-2055		CAPACITOR-FXD .01UF +80-20% 100VDC CER	28480	0160-2055
A5C14	0160-2055		CAPACITOR-FXD .01UF +80-20% 100VDC CER	28480	0160-2055
A5C15	0160-2055		CAPACITOR-FXD .01UF +80-20% 100VDC CER	28480	0160-2055
A5C16	0160-3670		CAPACITOR-FXD .1UF +-20% 200VDC CER	28480	0160-3670
A5C17	0160-3670		CAPACITOR-FXD .1UF +-20% 200VDC CER	28480	0160-3670
A5C18	0160-3670		CAPACITOR-FXD .1UF +-20% 200VDC CER	28480	0160-3670
A5CR1	1901-0040	19	DIODE-SWITCHING 30V 50MA 2NS DO-35	28480	1901-0040
A5CR2	1901-0040		DIODE-SWITCHING 30V 50MA 2NS DO-35	28480	1901-0040
A5CR3	1901-0040		DIODE-SWITCHING 30V 50MA 2NS DO-35	28480	1901-0040
A5CR4	1901-0040		DIODE-SWITCHING 30V 50MA 2NS DO-35	28480	1901-0040
A5L1	9140-0210		COIL-MLD 100UH 5% Q=50 .155DX.375LG	02178	15-1315-12J
A5L2	9140-0210		COIL-MLD 100UH 5% Q=50 .155DX.375LG	02178	15-1315-12J
A5L3	9140-0210		COIL-MLD 100UH 5% Q=50 .155DX.375LG	02178	15-1315-12J
A5MP1	1480-0073		PIN:DRIVE 0.250" LG	0000J	OBD
A5MP2	4040-0750	3	EXTRACTOR-PC BOARD RED POLYC	28480	4040-0750
A5MP3 THRU A5MP6	1200-0185	7	INSULATOR-TRANSITOR NYLON	0260H	7717-86N RED
A5MP7 THRU A5MP10	1205-0095	7	HEAT SINK TO-5/TO-39PKG	28480	1205-0095
A5Q1	1853-0038		TRANSISTOR PNP SI TO-39 PD=1W FT=100MHZ	28480	1853-0038
A5Q2	1854-0523	7	TRANSISTOR NPN SI TO-39 PD=1W FT=150MHZ	28480	1854-0523
A5Q3	1854-0523		TRANSISTOR NPN SI TO-39 PD=1W FT=150MHZ	28480	1854-0523
A5Q4	1853-0038		TRANSISTOR PNP SI TO-39 PD=1W FT=100MHZ	28480	1853-0038
A5Q5	1853-0007		TRANSISTOR PNP 2N3251 SI TO-18 PD=360MW	0203G	2N3251
A5Q6	1853-0007		TRANSISTOR PNP 2N3251 SI TO-18 PD=360MW	0203G	2N3251
A5Q7	1854-0404		TRANSISTOR NPN SI TO-18 PD=360MW	28480	1854-0404
A5Q8	1854-0404		TRANSISTOR NPN SI TO-18 PD=360MW	28480	1854-0404
A5Q9	1853-0007		TRANSISTOR PNP 2N3251 SI TO-18 PD=360MW	0203G	2N3251
A5Q10	1853-0007		TRANSISTOR PNP 2N3251 SI TO-18 PD=360MW	0203G	2N3251
A5Q11	1853-0007		TRANSISTOR PNP 2N3251 SI TO-18 PD=360MW	0203G	2N3251
A5Q12	1854-0404		TRANSISTOR NPN SI TO-18 PD=360MW	28480	1854-0404
A5Q13	1854-0404		TRANSISTOR NPN SI TO-18 PD=360MW	28480	1854-0404
A5Q14	1853-0007		TRANSISTOR PNP 2N3251 SI TO-18 PD=360MW	0203G	2N3251
A5Q15	1853-0007		TRANSISTOR PNP 2N3251 SI TO-18 PD=360MW	0203G	2N3251
A5Q16	1855-0052	1	TRANSISTOR MOSFET P-CHAN D-MODE TO-92 SI	0223G	2N4360
A5Q17	1855-0020	42	TRANSISTOR J-FET N-CHAN D-MODE TO-18 SI	28480	1855-0020
A5R1	0757-0465		RESISTOR 100K 1% .125W F TC=0+-100	0329B	C4-1/8-T0-1003-F
A5R2	0757-0180		RESISTOR 31.6 1% .125W F TC=0+-100	0160G	CC
A5R3	0757-0278		RESISTOR 1.78K 1% .125W F TC=0+-100	0329B	C4-1/8-T0-1781-F
A5R4	0698-3150	5	RESISTOR 2.37K 1% .125W F TC=0+-100	0329B	C4-1/8-T0-2371-F
A5R5	0698-3155	20	RESISTOR 4.64K 1% .125W F TC=0+-100	0329B	C4-1/8-T0-4641-F

See introduction to this section for ordering information

Scans by ARTEK MEDIA =>

Table 6-2. Replaceable Parts

Reference Designation	HP Part Number	Qty	Description	Mfr Code	Mfr Part Number
A5R6	0757-0180		RESISTOR 31.6 1% .125W F TC=0+-100	0160G	CC
A5R7	0757-0442		RESISTOR 10K 1% .125W F TC=0+-100	03298	C4-1/8-T0-1002-F
A5R8	0757-0401	45	RESISTOR 100 1% .125W F TC=0+-100	03298	C4-1/8-T0-101-F
A5R9	0757-0401		RESISTOR 100 1% .125W F TC=0+-100	03298	C4-1/8-T0-101-F
A5R10	0757-0401		RESISTOR 100 1% .125W F TC=0+-100	03298	C4-1/8-T0-101-F
A5R11	0757-0401		RESISTOR 100 1% .125W F TC=0+-100	03298	C4-1/8-T0-101-F
A5R12	0757-0417	5	RESISTOR 562 1% .125W F TC=0+-100	03298	C4-1/8-T0-562R-F
A5R13	0757-0417		RESISTOR 562 1% .125W F TC=0+-100	03298	C4-1/8-T0-562R-F
A5R14	0757-0440	14	RESISTOR 7.5K 1% .125W F TC=0+-100	03298	C4-1/8-T0-7501-F
A5R15	0757-0444	10	RESISTOR 12.1K 1% .125W F TC=0+-100	03298	C4-1/8-T0-1212-F
A5R16	0698-0084		RESISTOR 2.15K 1% .125W F TC=0+-100	03298	C4-1/8-T0-2151-F
A5R17	0698-0084		RESISTOR 2.15K 1% .125W F TC=0+-100	03298	C4-1/8-T0-2151-F
A5R18	0698-0084		RESISTOR 2.15K 1% .125W F TC=0+-100	03298	C4-1/8-T0-2151-F
A5R19	0698-0084		RESISTOR 2.15K 1% .125W F TC=0+-100	03298	C4-1/8-T0-2151-F
A5R20	0698-3155		RESISTOR 4.64K 1% .125W F TC=0+-100	03298	C4-1/8-T0-4641-F
A5R21	0757-1094		RESISTOR 1.47K 1% .125W F TC=0+-100	03298	C4-1/8-T0-1471-F
A5R22	0757-0460	2	RESISTOR 61.9K 1% .125W F TC=0+-100	03298	C4-1/8-T0-6192-F
A5R23	0757-0460		RESISTOR 61.9K 1% .125W F TC=0+-100	03298	C4-1/8-T0-6192-F
A5R24	0698-3150		RESISTOR 2.37K 1% .125W F TC=0+-100	03298	C4-1/8-T0-2371-F
A5R25	0698-3150		RESISTOR 2.37K 1% .125W F TC=0+-100	03298	C4-1/8-T0-2371-F
A5R26	0757-0420	5	RESISTOR 750 1% .125W F TC=0+-100	03298	C4-1/8-T0-751-F
A5R27	2100-3351	2	RESISTOR-TRMR 500 10% C SIDE-ADJ 1-TRN	73138	72-142-0
A5R28	0698-3444		RESISTOR 316 1% .125W F TC=0+-100	03298	C4-1/8-T0-316R-F
A5R29	0698-3415	2	RESISTOR 19.6K 1% .5W F TC=0+-100	0552D	CMF-65-2
A5R30	0698-3415		RESISTOR 19.6K 1% .5W F TC=0+-100	0552D	CMF-65-2
A5R31	0757-0439	24	RESISTOR 6.81K 1% .125W F TC=0+-100	03298	C4-1/8-T0-6811-F
A5R32	0757-0439		RESISTOR 6.81K 1% .125W F TC=0+-100	03298	C4-1/8-T0-6811-F
A5R33	0757-0438	21	RESISTOR 5.11K 1% .125W F TC=0+-100	03298	C4-1/8-T0-5111-F
A5R34	0757-0438		RESISTOR 5.11K 1% .125W F TC=0+-100	03298	C4-1/8-T0-5111-F
A5R35	0757-0856	2	RESISTOR 75K 1% .5W F TC=0+-100	0299E	MF7C1/2-T0-7502-F
A5R36	0757-0856		RESISTOR 75K 1% .5W F TC=0+-100	0299E	MF7C1/2-T0-7502-F
A5R37	0757-0346		RESISTOR 10 1% .125W F TC=0+-100	03298	C4-1/8-T0-10R0-F
A5R38	0757-0346		RESISTOR 10 1% .125W F TC=0+-100	03298	C4-1/8-T0-10R0-F
A5R39	0757-0346		RESISTOR 10 1% .125W F TC=0+-100	03298	C4-1/8-T0-10R0-F
A5R40	0757-0346		RESISTOR 10 1% .125W F TC=0+-100	03298	C4-1/8-T0-10R0-F
A5R41	0698-3406	2	RESISTOR 1.33K 1% .5W F TC=0+-100	0552D	CMF-65-2
A5R42	0698-3406		RESISTOR 1.33K 1% .5W F TC=0+-100	0552D	CMF-65-2
A5R43	0698-3260	34	RESISTOR 464K 1% .125W F TC=0+-100	0160G	CC
A5R44	0698-3260		RESISTOR 464K 1% .125W F TC=0+-100	0160G	CC
A6	08565-60052		ASSEMBLY, X-DEFLECTION AMPLIFIER SAME AS A5, USE A6 PREFIX	28480	08565-60052
A7	08565-60039	1	ASSEMBLY, STORAGE	28480	08565-60039
A7C1	0180-0197		CAPACITOR-FXD 2.2UF+-10% 20VDC TA	0420J	150D225X9020A2
A7C2	0180-0197		CAPACITOR-FXD 2.2UF+-10% 20VDC TA	0420J	150D225X9020A2
A7C3	0180-0197		CAPACITOR-FXD 2.2UF+-10% 20VDC TA	0420J	150D225X9020A2
A7C4	0160-3670		CAPACITOR-FXD .1UF +-20% 200VDC CER	28480	0160-3670
A7C5	0160-2055		CAPACITOR-FXD .01UF +80-20% 100VDC CER	28480	0160-2055
A7C6	0160-0163	3	CAPACITOR-FXD .033UF +-10% 200VDC POLYE	0420J	292P33392
A7C7	0180-0197		CAPACITOR-FXD 2.2UF+-10% 20VDC TA	0420J	150D225X9020A2
A7C8	0160-0194	1	CAPACITOR-FXD .015UF +-10% 200VDC POLYE	0420J	292P15392
A7C9	0160-0168	4	CAPACITOR-FXD .1UF +-10% 200VDC POLYE	0420J	292P10492
A7C10	0160-0168		CAPACITOR-FXD .1UF +-10% 200VDC POLYE	0420J	292P10492
A7C11	0180-0117	1	CAPACITOR-FXD 2.7UF+-10% 35VDC TA	0420J	150D275X9035B2
A7C12	0160-2055		CAPACITOR-FXD .01UF +80-20% 100VDC CER	28480	0160-2055
A7C13	0180-2205	2	CAPACITOR-FXD .33UF+-10% 35VDC TA	0420J	150D334X9035A2
A7C14	0160-2055		CAPACITOR-FXD .01UF +80-20% 100VDC CER	28480	0160-2055
A7C15	0180-0376	1	CAPACITOR-FXD .47UF+-10% 35VDC TA	0420J	150D474X9035A2
A7C16	0180-0197		CAPACITOR-FXD 2.2UF+-10% 20VDC TA	0420J	150D225X9020A2
A7C17	0160-2055		CAPACITOR-FXD .01UF +80-20% 100VDC CER	28480	0160-2055
A7C18	0160-3456	28	CAPACITOR-FXD 1000PF +-10% 1KVDC CER	28480	0160-3456
A7C19	0160-3456		CAPACITOR-FXD 1000PF +-10% 1KVDC CER	28480	0160-3456
A7C20	0160-3466	7	CAPACITOR-FXD 100PF +-10% 1KVDC CER	28480	0160-3466
A7C21	0160-3466		CAPACITOR-FXD 100PF +-10% 1KVDC CER	28480	0160-3466
A7CR1	1901-0050		DIODE-SWITCHING 80V 200MA 2NS DO-7	28480	1901-0050
A7CR2	1901-0050		DIODE-SWITCHING 80V 200MA 2NS DO-7	28480	1901-0050
A7CR3	1901-0050		DIODE-SWITCHING 80V 200MA 2NS DO-7	28480	1901-0050
A7CR4	1901-0050		DIODE-SWITCHING 80V 200MA 2NS DO-7	28480	1901-0050
A7CR5	1901-0028		DIODE-PWR RECT 400V 750MA DO-29	0271C	MP493

See introduction to this section for ordering information

Scans by ARTEK MEDIA =>

Table 6-2. Replaceable Parts

Reference Designation	HP Part Number	Qty	Description	Mfr Code	Mfr Part Number
A7CR6	1901-0050		DIODE-SWITCHING 80V 200MA 2NS DO-7	28480	1901-0050
A7CR7	1901-0050		DIODE-SWITCHING 80V 200MA 2NS DO-7	28480	1901-0050
A7CR8	1901-0096		DIODE-SWITCHING 120V 50MA 100NS	28480	1901-0096
A7CR9	1901-0028		DIODE-PWR RECT 400V 750MA DO-29	0271C	MP493
A7CR10	1901-0050		DIODE-SWITCHING 80V 200MA 2NS DO-7	28480	1901-0050
A7MP1	0403-0026	2	GLIDE:NYLON	28480	0403-0026
A7MP2	1480-0073		PIN:DRIVE 0.250" LG	0000J	OBD
A7MP3	1480-0073		PIN:DRIVE 0.250" LG	0000J	OBD
A7MP4	4040-0752	3	EXTRACTOR-PC BOARD YEL POLYC	28480	4040-0752
A7MP5	4040-0752		EXTRACTOR-PC BOARD YEL POLYC	28480	4040-0752
A7Q1	1854-0404		TRANSISTOR NPN SI TO-18 PD=360MW	28480	1854-0404
A7Q2	1853-0281	7	TRANSISTOR PNP 2N2907A SI TO-18 PD=400MW	0203G	2N2907A
A7Q3	1853-0281		TRANSISTOR PNP 2N2907A SI TO-18 PD=400MW	0203G	2N2907A
A7Q4	1854-0523		TRANSISTOR NPN SI TO-39 PD=1W FT=150MHZ	28480	1854-0523
A7Q5	1854-0404		TRANSISTOR NPN SI TO-18 PD=360MW	28480	1854-0404
A7Q6	1854-0404		TRANSISTOR NPN SI TO-18 PD=360MW	28480	1854-0404
A7Q7	1854-0523		TRANSISTOR NPN SI TO-39 PD=1W FT=150MHZ	28480	1854-0523
A7Q8	1854-0523		TRANSISTOR NPN SI TO-39 PD=1W FT=150MHZ	28480	1854-0523
A7Q9	1854-0523		TRANSISTOR NPN SI TO-39 PD=1W FT=150MHZ	28480	1854-0523
A7Q10	1854-0404		TRANSISTOR NPN SI TO-18 PD=360MW	28480	1854-0404
A7Q11	1853-0281		TRANSISTOR PNP 2N2907A SI TO-18 PD=400MW	0203G	2N2907A
A7Q12	1853-0224	3	TRANSISTOR PNP SI TO-39 PD=1W FT=15MHZ	0192A	2N5415
A7Q13	1853-0224		TRANSISTOR PNP SI TO-39 PD=1W FT=15MHZ	0192A	2N5415
A7Q14	1853-0224		TRANSISTOR PNP SI TO-39 PD=1W FT=15MHZ	0192A	2N5415
A7Q15	1854-0234	3	TRANSISTOR NPN 2N3440 SI TO-5 PD=1W	0192A	2N3440
A7Q16	1854-0523		TRANSISTOR NPN SI TO-39 PD=1W FT=150MHZ	28480	1854-0523
A7Q17	1854-0404		TRANSISTOR NPN SI TO-18 PD=360MW	28480	1854-0404
A7Q18	1854-0404		TRANSISTOR NPN SI TO-18 PD=360MW	28480	1854-0404
A7R1	0698-3155		RESISTOR 4.64K 1% .125W F TC=0+-100	03298	C4-1/8-T0-4641-F
A7R2			NOT ASSIGNED		
A7R3	0757-0458		RESISTOR 51.1K 1% .125W F TC=0+-100	03298	C4-1/8-T0-5112-F
A7R4	0757-0199		RESISTOR 21.5K 1% .125W F TC=0+-100	03298	C4-1/8-T0-2152-F
A7R5	0757-0317	5	RESISTOR 1.33K 1% .125W F TC=0+-100	03298	C4-1/8-T0-1331-F
A7R6	0698-3162		RESISTOR 46.4K 1% .125W F TC=0+-100	03298	C4-1/8-T0-4642-F
A7R7	0757-0280		RESISTOR 1K 1% .125W F TC=0+-100	03298	C4-1/8-T0-1001-F
A7R8	0757-0442		RESISTOR 10K 1% .125W F TC=0+-100	03298	C4-1/8-T0-1002-F
A7R9	0757-0442		RESISTOR 10K 1% .125W F TC=0+-100	03298	C4-1/8-T0-1002-F
A7R10	0698-3160	40	RESISTOR 31.6K 1% .125W F TC=0+-100	03298	C4-1/8-T0-3162-F
A7R11	0757-0199		RESISTOR 21.5K 1% .125W F TC=0+-100	03298	C4-1/8-T0-2152-F
A7R12	0698-3457	13	RESISTOR 316K 1% .125W F TC=0+-100	01600	CC
A7R13	0757-0442		RESISTOR 10K 1% .125W F TC=0+-100	03298	C4-1/8-T0-1002-F
A7R14	0757-0465		RESISTOR 100K 1% .125W F TC=0+-100	03298	C4-1/8-T0-1003-F
A7R15	0698-3154	7	RESISTOR 4.22K 1% .125W F TC=0+-100	03298	C4-1/8-T0-4221-F
A7R16	0698-3154		RESISTOR 4.22K 1% .125W F TC=0+-100	03298	C4-1/8-T0-4221-F
A7R17	2100-3274	1	RESISTOR-TRMR 10K 10% C SIDE-ADJ 1-TRN	73138	72-146-0
A7R18	0757-0855	1	RESISTOR 68.1K 1% .5W F TC=0+-100	0299E	MF7C1/2-T0-6812-F
A7R19	0757-0280		RESISTOR 1K 1% .125W F TC=0+-100	03298	C4-1/8-T0-1001-F
A7R20	0757-0280		RESISTOR 1K 1% .125W F TC=0+-100	03298	C4-1/8-T0-1001-F
A7R21	0757-0280		RESISTOR 1K 1% .125W F TC=0+-100	03298	C4-1/8-T0-1001-F
A7R22	0698-3161	4	RESISTOR 38.3K 1% .125W F TC=0+-100	03298	C4-1/8-T0-3832-F
A7R23	0698-3161		RESISTOR 38.3K 1% .125W F TC=0+-100	03298	C4-1/8-T0-3832-F
A7R24	0698-3162		RESISTOR 46.4K 1% .125W F TC=0+-100	03298	C4-1/8-T0-4642-F
A7R25	0757-0442		RESISTOR 10K 1% .125W F TC=0+-100	03298	C4-1/8-T0-1002-F
A7R26	0698-3260		RESISTOR 464K 1% .125W F TC=0+-100	01600	CC
A7R27	0757-0465		RESISTOR 100K 1% .125W F TC=0+-100	03298	C4-1/8-T0-1003-F
A7R28	0698-3162		RESISTOR 46.4K 1% .125W F TC=0+-100	03298	C4-1/8-T0-4642-F
A7R29	0757-0467	10	RESISTOR 121K 1% .125W F TC=0+-100	03298	C4-1/8-T0-1213-F
A7R30	0698-3156		RESISTOR 14.7K 1% .125W F TC=0+-100	03298	C4-1/8-T0-1472-F
A7R31	0757-0465		RESISTOR 100K 1% .125W F TC=0+-100	03298	C4-1/8-T0-1003-F
A7R32	0698-3452	8	RESISTOR 147K 1% .125W F TC=0+-100	03298	C4-1/8-T0-1473-F
A7R33	0757-0199		RESISTOR 21.5K 1% .125W F TC=0+-100	03298	C4-1/8-T0-2152-F
A7R34	0698-3155		RESISTOR 4.64K 1% .125W F TC=0+-100	03298	C4-1/8-T0-4641-F
A7R35	0698-3155		RESISTOR 4.64K 1% .125W F TC=0+-100	03298	C4-1/8-T0-4641-F
A7R36	0757-0280		RESISTOR 1K 1% .125W F TC=0+-100	03298	C4-1/8-T0-1001-F
A7R37	0757-0199		RESISTOR 21.5K 1% .125W F TC=0+-100	03298	C4-1/8-T0-2152-F
A7R38	0757-0442		RESISTOR 10K 1% .125W F TC=0+-100	03298	C4-1/8-T0-1002-F
A7R39	0757-0442		RESISTOR 10K 1% .125W F TC=0+-100	03298	C4-1/8-T0-1002-F
A7R40	0757-0280		RESISTOR 1K 1% .125W F TC=0+-100	03298	C4-1/8-T0-1001-F
A7R41	0757-0199		RESISTOR 21.5K 1% .125W F TC=0+-100	03298	C4-1/8-T0-2152-F
A7R42	0757-0199		RESISTOR 21.5K 1% .125W F TC=0+-100	03298	C4-1/8-T0-2152-F
A7R43	0698-3457		RESISTOR 316K 1% .125W F TC=0+-100	01600	CC
A7R44	0757-0467		RESISTOR 121K 1% .125W F TC=0+-100	03298	C4-1/8-T0-1213-F
A7R45	0698-3162		RESISTOR 46.4K 1% .125W F TC=0+-100	03298	C4-1/8-T0-4642-F
A7R46	0757-0199		RESISTOR 21.5K 1% .125W F TC=0+-100	03298	C4-1/8-T0-2152-F
A7R47	0757-0854	1	RESISTOR 56.2K 1% .5W F TC=0+-100	0299E	MF7C1/2-T0-5622-F
A7R48	0698-3454	6	RESISTOR 215K 1% .125W F TC=0+-100	03298	C4-1/8-T0-2153-F
A7R49	0698-3454		RESISTOR 215K 1% .125W F TC=0+-100	03298	C4-1/8-T0-2153-F
A7R50	0757-0459	6	RESISTOR 56.2K 1% .125W F TC=0+-100	03298	C4-1/8-T0-5622-F

See introduction to this section for ordering information

Scans by ARTEK MEDIA =>

Table 6-2. Replaceable Parts

Reference Designation	HP Part Number	Qty	Description	Mfr Code	Mfr Part Number
A7R51	0757-0280		RESISTOR 1K 1% .125W F TC=0+-100	03298	C4-1/8-T0-1001-F
A7R52	0757-0442		RESISTOR 10K 1% .125W F TC=0+-100	03298	C4-1/8-T0-1002-F
A7R53	0698-3452		RESISTOR 147K 1% .125W F TC=0+-100	03298	C4-1/8-T0-1473-F
A7R54	0757-0442		RESISTOR 10K 1% .125W F TC=0+-100	03298	C4-1/8-T0-1002-F
A7R55	0757-0280		RESISTOR 1K 1% .125W F TC=0+-100	03298	C4-1/8-T0-1001-F
A7R56	0757-0290	22	RESISTOR 6.19K 1% .125W F TC=0+-100	0299E	MF4C1/8-T0-6191-F
A7R57	0698-3452		RESISTOR 147K 1% .125W F TC=0+-100	03298	C4-1/8-T0-1473-F
A7R58	0757-0458		RESISTOR 51.1K 1% .125W F TC=0+-100	03298	C4-1/8-T0-5112-F
A7R59	2100-3355	3	RESISTOR-TRMR 100K 10% C SIDE-ADJ 1-TRN	73138	72-150-0
A7R60	0698-3162		RESISTOR 46.4K 1% .125W F TC=0+-100	03298	C4-1/8-T0-4642-F
A7R61	0698-3457		RESISTOR 316K 1% .125W F TC=0+-100	0160G	CC
A7R62	0757-0199		RESISTOR 21.5K 1% .125W F TC=0+-100	03298	C4-1/8-T0-2152-F
A7R63	2100-3355		RESISTOR-TRMR 100K 10% C SIDE-ADJ 1-TRN	73138	72-150-0
A7R64	2100-3354	1	RESISTOR-TRMR 50K 10% C SIDE-ADJ 1-TRN	73138	72-149-0
A7R65	0757-0199		RESISTOR 21.5K 1% .125W F TC=0+-100	03298	C4-1/8-T0-2152-F
A7R66	0698-3391	1	RESISTOR 21.5 1% .5W F TC=0+-100	0552D	CMF-65-2
A7R67	0757-0280		RESISTOR 1K 1% .125W F TC=0+-100	03298	C4-1/8-T0-1001-F
A7R68	0757-0280		RESISTOR 1K 1% .125W F TC=0+-100	03298	C4-1/8-T0-1001-F
A7R69	0757-0444		RESISTOR 12.1K 1% .125W F TC=0+-100	03298	C4-1/8-T0-1212-F
A7R70	2100-0558	2	RESISTOR-TRMR 20K 10% C TOP-ADJ 1-TRN	73138	72-109-0
A7R71	2100-0558		RESISTOR-TRMR 20K 10% C TOP-ADJ 1-TRN	73138	72-109-0
A7U1	1820-1200	5	IC INV TTL LS HEX 1-INP	0169H	SN74LS05N
A7U2	1826-0119	2	IC	0291J	NE555T
A7U3	1820-1144		IC GATE TTL LS NOR QUAD 2-INP	02230	9LS02PC
A7U4	1820-1200		IC INV TTL LS HEX 1-INP	0169H	SN74LS05N
A7U5	1826-0119		IC	0291J	NE555T
A7U6	1820-1197	3	IC GATE TTL LS NAND QUAD 2-INP	0169H	SN74LS00N
A7U7	1820-1144		IC GATE TTL LS NOR QUAD 2-INP	02230	9LS02PC
A7VR1	1902-3193	1	DIODE-ZNR 13.3V 5% DO-7 PD=.4W TC=+.059%	02230	FZ7272
A7VR2	1902-3268	1	DIODE-ZNR 26.1V 5% DO-7 PD=.4W TC=+.079%	02230	FZ7300
A7VR3	1902-3002	2	DIODE-ZNR 2.37V 5% DO-7 PD=.4W TC=-.074%	02038	BZ 10939-2
A8	08565-60095	1	ASSEMBLY, HIGH VOLTAGE	28480	08565-60095
A8C1	0160-0544	2	CAPACITOR-FXD .022UF +-20% 4KVDC	28480	0160-0544
A8C2	0160-0544		CAPACITOR-FXD .022UF +-20% 4KVDC	28480	0160-0544
A8C3	0160-0684	3	CAPACITOR-FXD 1000PF +-20% 4KVDC	28480	0160-0684
A8C4	0160-2264	2	CAPACITOR-FXD 20PF +-5% 500VDC CER0+-30	28480	0160-2264
A8C5	0160-0684		CAPACITOR-FXD 1000PF +-20% 4KVDC	28480	0160-0684
A8C6	0160-4051	2	CAPACITOR-FXD .01UF +-20% 4KVDC	28480	0160-4051
A8C7	0160-4051		CAPACITOR-FXD .01UF +-20% 4KVDC	28480	0160-4051
A8C8	0160-0684		CAPACITOR-FXD 1000PF +-20% 4KVDC	28480	0160-0684
A8C9	0180-0089	1	CAPACITOR-FXD 10UF+50-10% 150VDC AL	0420J	30D106F150DD2
A8CR1	1901-0683	1	DIODE-HV RECT 10KV 5MA 250NS	28480	1901-0683
A8CR2	1901-0028		DIODE-PWR RECT 400V 750MA DO-29	0271C	MP493
A8CR3	1901-0028		DIODE-PWR RECT 400V 750MA DO-29	0271C	MP493
A8CR4	1901-0028		DIODE-PWR RECT 400V 750MA DO-29	0271C	MP493
A8CR5	1901-0028		DIODE-PWR RECT 400V 750MA DO-29	0271C	MP493
A8MP1	0340-0007	2	STANDOFF-RND .5LG 6-32THD .500 CER GLZ	28480	0340-0007
A8MP2	0340-0007		STANDOFF-RND .5LG 6-32THD .500 CER GLZ	28480	0340-0007
A8MP3	01332-01201	1	BRACKET	28480	01332-01201
A8MP4	2360-0275	6	SCREW-MACH 6-32 .25-IN-LG BDG-HD-SLT	0460D	102222
A8MP5	2360-0275		SCREW-MACH 6-32 .25-IN-LG BDG-HD-SLT	0460D	102222
A8MP6	2360-0275		SCREW-MACH 6-32 .25-IN-LG BDG-HD-SLT	0460D	102222
A8MP7	2360-0275		SCREW-MACH 6-32 .25-IN-LG BDG-HD-SLT	0460D	102222
A8MP8	2360-0275		SCREW-MACH 6-32 .25-IN-LG BDG-HD-SLT	0460D	102222
A8MP9	2360-0275		SCREW-MACH 6-32 .25-IN-LG BDG-HD-SLT	0460D	102222
A8R1	0684-1041	1	RESISTOR 100K 10% .25W FC TC=-400/+800	0160G	CB1041
A8R2	0757-0747	1	RESISTOR 5.11K 1% .25W F TC=0+-100	03418	C5-1/4-T0-5111-F
A8R3	0687-3941	1	RESISTOR 390K 10% .5W CC TC=0+882	0160G	EB3941
A8R4	0698-8018	1	RESISTOR 30M 1% 3W CP TC=0+-100	03888	PVC175-3-T0-3004-F
A8R5	0683-1025	1	RESISTOR 1K 5% .25W FC TC=-400/+600	0160G	CB1025
A8R6	0684-6811	3	RESISTOR 680 10% .25W FC TC=-400/+600	0160G	CB6811
A8R7	0687-1061	1	RESISTOR 10M 10% .5W CC TC=0+1059	0160G	EB1061
A8R8	0684-6811		RESISTOR 680 10% .25W FC TC=-400/+600	0160G	CB6811
A8R9	0684-1051	1	RESISTOR 1M 10% .25W FC TC=-800/+900	0160G	CB1051
A8R10	0687-2221	1	RESISTOR 2.2K 10% .5W CC TC=0+647	0160G	EB2221
A8R11	0687-1001	1	RESISTOR 10 10% .5W CC TC=0+412	0160G	EB1001
A8R12			NOT ASSIGNED		
A8R13	2100-3359	1	RESISTOR-TRMR 2M 20% C SIDE-ADJ 1-TRN	73138	72-155-0
A8R14			NOT ASSIGNED		
18R15	0684-6811		RESISTOR 680 10% .25W FC TC=-400/+600	0160G	CB6811
18R16	0683-1015	1	RESISTOR 100 5% .25W FC TC=-400/+500	0160G	CB1015
A8R17	0687-5611	1	RESISTOR 560 10% .5W CC TC=0+529	0160G	EB5611
A8T1	01335-61101	1	TRANSFORMER	28480	01335-61101

See introduction to this section for ordering information

Scans by ARTEK MEDIA =>

Table 6-2. Replaceable Parts

Reference Designation	HP Part Number	Qty	Description	Mfr Code	Mfr Part Number
A8V1	2140-0018	2	LAMP-GLOW A9A-C 90/58VDC 700UA T-2-BULB	74276	A9A-C
A8V2	2140-0018		LAMP-GLOW A9A-C 90/58VDC 700UA T-2-BULB	74276	A9A-C
A8VR1	1902-3333	2	DIODE-ZNR 46.4V 5% DO-7 PD=.4W TC=+.081%	0203G	BZ 10939-374
A9	08565-60054	1	ASSEMBLY, HIGH VOLTAGE OSCILLATOR	28480	08565-60054
A9C1	0180-0141	3	CAPACITOR-FXD 50UF+75-10% 50VDC AL	0420J	30D506G050DD2
A9C2	0180-0269	1	CAPACITOR-FXD 1UF+75-10% 150VDC AL	0420J	30D105G150BA2
A9C3	0160-4297	13	CAPACITOR-FXD .022UF +80-20% 100VDC CER	0420J	C023F101H223Z822-CDH
A9C4	0160-4297		CAPACITOR-FXD .022UF +80-20% 100VDC CER	0420J	C023F101H223Z822-CDH
A9C5	0160-0166	2	CAPACITOR-FXD .068UF +-10% 200VDC POLYE	0420J	292P68392
A9C6	0160-4297		CAPACITOR-FXD .022UF +80-20% 100VDC CER	0420J	C023F101H223Z822-CDH
A9C7	0160-0164	1	CAPACITOR-FXD .039UF +-10% 200VDC POLYE	0420J	292P39392
A9C8	0160-4084		CAPACITOR-FXD .1UF +-20% 50VDC CER	28480	0160-4084
A9C9	0180-0141		CAPACITOR-FXD 50UF+75-10% 50VDC AL	0420J	30D506G050DD2
A9C10	0180-0141		CAPACITOR-FXD 50UF+75-10% 50VDC AL	0420J	30D506G050DD2
A9CR1	1901-0159	14	DIODE-PWR RECT 400V 750MA DO-41	0203G	BR1358-4
A9CR2	1901-0159		DIODE-PWR RECT 400V 750MA DO-41	0203G	BR1358-4
A9CR3	1901-0050		DIODE-SWITCHING 80V 200MA 2N8 DO-7	28480	1901-0050
A9CR4	1901-0050		DIODE-SWITCHING 80V 200MA 2N8 DO-7	28480	1901-0050
A9CR5	1901-0050		DIODE-SWITCHING 80V 200MA 2N8 DO-7	28480	1901-0050
A9CR6	1901-0050		DIODE-SWITCHING 80V 200MA 2N8 DO-7	28480	1901-0050
A9F1	2110-0001	3	FUSE 1A 250V FAST-BLO 1.25X.25 UL IEC	0470C	312001.
A9L1	9140-0171	2	COIL-MLD 40UH 10% Q=20 .296DX.968LG	28480	9140-0171
A9L2	9100-1641	1	COIL-MLD 240UH 5% Q=65 .155DX.375LG	02178	15-1315-21J
A9L3	9140-0171		COIL-MLD 40UH 10% Q=20 .296DX.968LG	28480	9140-0171
A9MP1	1205-0095		HEAT SINK TO-5/TO-39-PKG	28480	1205-0095
A9MP2	08565-00038	1	HEAT SINK, HI-VOLTAGE	28480	08565-00038
A9MP3	2200-0111	2	SCREW-MACH 4-40 .5-IN-LG PAN-HD-POZI	28480	2200-0111
A9MP4	2200-0111		SCREW-MACH 4-40 .5-IN-LG PAN-HD-POZI	28480	2200-0111
A9MP5	2260-0009	2	NUT-HEX-W/LKWR 4-40-THD .094-IN-THK	28480	2260-0009
A9MP6	2260-0009		NUT-HEX-W/LKWR 4-40-THD .094-IN-THK	28480	2260-0009
A9MP7	1200-0081	20	INSULATOR-SSHG-FLG NYLON	28480	1200-0081
A9MP8	1200-0081		INSULATOR-SSHG-FLG NYLON	28480	1200-0081
A9MP9	2110-0269	16	FUSEHOLDER-CLIP TYPE .25D-FUSE	28480	2110-0269
A9MP10	2110-0269		FUSEHOLDER-CLIP TYPE .25D-FUSE	28480	2110-0269
A9MP11	1200-0043	6	INSULATOR-X STR ALUMINUM	0473G	322047
A9Q1	1854-0518	1	TRANSISTOR NPN 2N5877 SI TO-3 PD=150W	02039	2N5877
A9Q2	1854-0404		TRANSISTOR NPN SI TO-18 PD=360MW	28480	1854-0404
A9Q3	1854-0361	1	TRANSISTOR NPN 2N4239 SI TO-5 PD=600MW	0203G	2N4239
A9R1	2100-3054	4	RESISTOR-TRMR 50K 10% C SIDE-ADJ 17-TRN	73138	89PR50K
A9R2	2100-3162	1	RESISTOR-TRMR 200K 10% C SIDE-ADJ 17-TRN	73138	89PR200K
A9R3	0698-0084		RESISTOR 2.15K 1% .125W F TC=0+-100	03298	C4-1/8-T0-2151-F
A9R4	0757-0442		RESISTOR 10K 1% .125W F TC=0+-100	03298	C4-1/8-T0-1002-F
A9R5	0757-0465		RESISTOR 100K 1% .125W F TC=0+-100	03298	C4-1/8-T0-1003-F
A9R6	0757-0465		RESISTOR 100K 1% .125W F TC=0+-100	03298	C4-1/8-T0-1003-F
A9R7	0698-3452		RESISTOR 147K 1% .125W F TC=0+-100	03298	C4-1/8-T0-1473-F
A9R8	0698-3446	5	RESISTOR 383 1% .125W F TC=0+-100	03298	C4-1/8-T0-383R-F
A9R9	0683-2265	1	RESISTOR 22M 5% .25W FC TC=-900/+1200	01609	C82265
A9R10	0757-0403	5	RESISTOR 121 1% .125W F TC=0+-100	03298	C4-1/8-T0-121R-F
A9R11	0698-8913	1	RESISTOR 1.5M 1% .125W F TC=0+-100	01609	CC
A9R12	0757-0279		RESISTOR 3.16K 1% .125W F TC=0+-100	03298	C4-1/8-T0-3161-F
A9U1	1826-0167	1	IC OP AMP	0192A	CA3094AT
A9VR1	1902-3357	1	DIODE-ZNR 56.2V 5% DO-7 PD=.4W TC=+.081%	0203G	BZ 10939-398
A10	08565-60029	1	ASSEMBLY, DISPLAY MOTHERBOARD	28480	08565-60029
A10C1	0160-3879	4	CAPACITOR-FXD .01UF +-20% 100VDC CER	28480	0160-3879
A10E1	1251-0600		CONTACT-CONN U/W-POST-TYPE MALE DPSLDR	28480	1251-0600
A10E2	1251-0600		CONTACT-CONN U/W-POST-TYPE MALE DPSLDR	28480	1251-0600
A10E3	1251-0600		CONTACT-CONN U/W-POST-TYPE MALE DPSLDR	28480	1251-0600
A10E4	1251-0600		CONTACT-CONN U/W-POST-TYPE MALE DPSLDR	28480	1251-0600
A10E5	1251-0600		CONTACT-CONN U/W-POST-TYPE MALE DPSLDR	28480	1251-0600
A10J1	1200-0507		SOCKET-IC 16-CONT DIP-SLDR	06776	0002811
A10R1	0757-0416		RESISTOR 511 1% .125W F TC=0+-100	03298	C4-1/8-T0-511R-F
A10R2	0757-0444		RESISTOR 12.1K 1% .125W F TC=0+-100	03298	C4-1/8-T0-1212-F
A10R3	0698-3160		RESISTOR 31.6K 1% .125W F TC=0+-100	03298	C4-1/8-T0-3162-F
A10R4	0698-3154		RESISTOR 4.22K 1% .125W F TC=0+-100	03298	C4-1/8-T0-4221-F
A10R5	0757-0280		RESISTOR 1K 1% .125W F TC=0+-100	03298	C4-1/8-T0-1001-F

See introduction to this section for ordering information

Scans by ARTEK MEDIA =>

Table 6-2. Replaceable Parts

Reference Designation	HP Part Number	Qty	Description	Mfr Code	Mfr Part Number
A10R6	0757-0280		RESISTOR 1K 1% .125W F TC=0+-100	03298	C4-1/8-T0-1001-F
A10R7	0698-3160		RESISTOR 31.6K 1% .125W F TC=0+-100	03298	C4-1/8-T0-3162-F
A10VR1	1902-3381	1	DIODE-ZNR 68.1V 5% DO-7 PD=.4W TC=+.079%	0203G	BZ 10939-422
A10XA3	1251-0472		CONNECTOR-PC EDGE 6-CONT/ROW 2-ROWS	0450G	252-06-30-300
A10XA4	1251-2035	11	CONNECTOR-PC EDGE 15-CONT/ROW 2-ROWS	0450G	252-15-30-300
A10XA5	1251-2035		CONNECTOR-PC EDGE 15-CONT/ROW 2-ROWS	0450G	252-15-30-300
A10XA6	1251-2035		CONNECTOR-PC EDGE 15-CONT/ROW 2-ROWS	0450G	252-15-30-300
A10XA7	1251-2035		CONNECTOR-PC EDGE 15-CONT/ROW 2-ROWS	0450G	252-15-30-300
A10XA8	1251-2034	1	CONNECTOR-PC EDGE 10-CONT/ROW 2-ROWS	0450G	252-10-30-300
A10XA9	1251-2035		CONNECTOR-PC EDGE 15-CONT/ROW 2-ROWS	0450G	252-15-30-300
A11	08565-60015	1	ASSEMBLY, DVM DIGITAL	28480	08565-60015
A11C1	0180-1746	20	CAPACITOR-FXD 15UF+-10% 20VDC TA	0420J	150D156X902B2
A11C2	0180-1746		CAPACITOR-FXD 15UF+-10% 20VDC TA	0420J	150D156X902B2
A11C3	0180-2208	9	CAPACITOR-FXD 220UF+-10% 10VDC TA	0420J	150D227X901B2
A11C4	0160-2055		CAPACITOR-FXD .01UF +80-20% 100VDC CER	28480	0160-2055
A11C5	0160-2055		CAPACITOR-FXD .01UF +80-20% 100VDC CER	28480	0160-2055
A11C6	0180-0197		CAPACITOR-FXD 2.2UF+-10% 20VDC TA	0420J	150D225X9020A2
A11C7	0160-2055		CAPACITOR-FXD .01UF +80-20% 100VDC CER	28480	0160-2055
A11C8	0160-2055		CAPACITOR-FXD .01UF +80-20% 100VDC CER	28480	0160-2055
A11C9	0160-2055		CAPACITOR-FXD .01UF +80-20% 100VDC CER	28480	0160-2055
A11C10	0160-2307	2	CAPACITOR-FXD 47PF +-5% 300VDC	28480	0160-2307
A11C11	0160-2222	1	CAPACITOR-FXD 1500PF +-5% 300VDC	28480	0160-2222
A11C12	0160-2055		CAPACITOR-FXD .01UF +80-20% 100VDC CER	28480	0160-2055
A11C13	0160-0574	2	CAPACITOR-FXD .022UF +-20% 100VDC CER	28480	0160-0574
A11C14	0160-0574		CAPACITOR-FXD .022UF +-20% 100VDC CER	28480	0160-0574
A11C15	0140-0200	1	CAPACITOR-FXD 390PF +-5% 300VDC MICA0+70	72136	DM15F391J0300WV1CR
A11C16	0160-0155	3	CAPACITOR-FXD 3300PF +-10% 200VDC POLYE	0420J	292P33292
A11C17	0180-1746		CAPACITOR-FXD 15UF+-10% 20VDC TA	0420J	150D156X9020B2
A11CR1	1901-0050		DIODE-SWITCHING 80V 200MA 2NS DO-7	28480	1901-0050
A11CR2	1901-0050		DIODE-SWITCHING 80V 200MA 2NS DO-7	28480	1901-0050
A11E1	9170-0029		CORE-SHIELDING BEAD	0188G	56-590-65A2/4A
A11J1	1200-0507		SOCKET-IC 16-CONT DIP-SLDR	06776	0002811
A11J2	1200-0507		SOCKET-IC 16-CONT DIP-SLDR	06776	0002811
A11L1	9100-2833	2	COIL 39UH 5% Q=70 .25DX1LG SRF=20MHZ	28480	9100-2833
A11L2	9100-1619	16	COIL-MLD 6.8UH 10% Q=50 .155DX.375LG	02178	15-4435-2K
A11MP1	1480-0073		PINSDRIVE 0.250" LG	0000J	OBD
A11MP2	1480-0073		PINSDRIVE 0.250" LG	0000J	OBD
A11MP3	4040-0748	11	EXTRACTOR-PC BOARD BLK POLYC	28480	4040-0748
A11MP4	4040-0748		EXTRACTOR-PC BOARD BLK POLYC	28480	4040-0748
A11Q1	1854-0477	12	TRANSISTOR NPN 2N2222A SI TO-18 PD=500MW	0223G	2N2222A
A11Q2	1854-0477		TRANSISTOR NPN 2N2222A SI TO-18 PD=500MW	0223G	2N2222A
A11Q3	1854-0477		TRANSISTOR NPN 2N2222A SI TO-18 PD=500MW	0223G	2N2222A
A11Q4	1854-0019	19	TRANSISTOR NPN SI TO-18 PD=360MW	28480	1854-0019
A11Q5	1854-0477		TRANSISTOR NPN 2N2222A SI TO-18 PD=500MW	0223G	2N2222A
A11R1	0698-3458	9	RESISTOR 348K 1% .125W F TC=0+-100	0160G	CC
A11R2	0698-3458		RESISTOR 348K 1% .125W F TC=0+-100	0160G	CC
A11R3	0757-0467		RESISTOR 121K 1% .125W F TC=0+-100	03298	C4-1/8-T0-1213-F
A11R4	0757-0467		RESISTOR 121K 1% .125W F TC=0+-100	03298	C4-1/8-T0-1213-F
A11R5	0698-3243	11	RESISTOR 178K 1% .125W F TC=0+-100	03298	C4-1/8-T0-1783-F
A11R6	0698-3243		RESISTOR 178K 1% .125W F TC=0+-100	03298	C4-1/8-T0-1783-F
A11R7	0757-0278		RESISTOR 1.78K 1% .125W F TC=0+-100	03298	C4-1/8-T0-1781-F
A11R8	0757-0279		RESISTOR 3.16K 1% .125W F TC=0+-100	03298	C4-1/8-T0-3161-F
A11R9	0698-3155		RESISTOR 4.64K 1% .125W F TC=0+-100	03298	C4-1/8-T0-4641-F
A11R10	0757-0461	18	RESISTOR 68.1K 1% .125W F TC=0+-100	03298	C4-1/8-T0-6812-F
A11R11	0698-3161		RESISTOR 38.3K 1% .125W F TC=0+-100	03298	C4-1/8-T0-3832-F
A11R12	0698-0084		RESISTOR 2.15K 1% .125W F TC=0+-100	03298	C4-1/8-T0-2151-F
A11R13	0698-0083	20	RESISTOR 1.96K 1% .125W F TC=0+-100	03298	C4-1/8-T0-1961-F
A11R14	0757-0280		RESISTOR 1K 1% .125W F TC=0+-100	03298	C4-1/8-T0-1001-F
A11R15	0757-0278		RESISTOR 1.78K 1% .125W F TC=0+-100	03298	C4-1/8-T0-1781-F
A11R16	0757-0419	5	RESISTOR 681 1% .125W F TC=0+-100	03298	C4-1/8-T0-681R-F
A11R17	0757-0419		RESISTOR 681 1% .125W F TC=0+-100	03298	C4-1/8-T0-681R-F
A11R18	0757-0317		RESISTOR 1.33K 1% .125W F TC=0+-100	03298	C4-1/8-T0-1331-F
A11R19	0757-0419		RESISTOR 681 1% .125W F TC=0+-100	03298	C4-1/8-T0-681R-F
A11R20	0757-0280		RESISTOR 1K 1% .125W F TC=0+-100	03298	C4-1/8-T0-1001-F
A11R21	0757-0401		RESISTOR 100 1% .125W F TC=0+-100	03298	C4-1/8-T0-101-F
A11R22	0757-0180		RESISTOR 31.6 1% .125W F TC=0+-100	0160G	CC
A11R23	0698-3160		RESISTOR 31.6K 1% .125W F TC=0+-100	03298	C4-1/8-T0-3162-F
A11R24	0757-0279		RESISTOR 3.16K 1% .125W F TC=0+-100	03298	C4-1/8-T0-3161-F
A11R25	0757-0280		RESISTOR 1K 1% .125W F TC=0+-100	03298	C4-1/8-T0-1001-F

See introduction to this section for ordering information

Scans by ARTEK MEDIA =>

Table 6-2. Replaceable Parts

Reference Designation	HP Part Number	Qty	Description	Mfr Code	Mfr Part Number
A11R26	0757-0280		RESISTOR 1K 1% .125W F TC=0+-100	03298	C4-1/8-T0-1001-F
A11R27	0698-3155		RESISTOR 4.64K 1% .125W F TC=0+-100	03298	C4-1/8-T0-4641-F
A11R28	0757-0280		RESISTOR 1K 1% .125W F TC=0+-100	03298	C4-1/8-T0-1001-F
A11U1	1820-1740	4	IC DRVR MOS DSPL DRVR	0340F	DS88863N
A11U2	1820-1443	4	IC CNTR TTL LS BIN ASYNCHRO	0169H	SN74LS293N
A11U3	1820-1443		IC CNTR TTL LS BIN ASYNCHRO	0169H	SN74LS293N
A11U4	1810-0208	10	NETWORK-RES 8-PIN-SIP .1-PIN-SPCG	0248C	750-81-R68K
A11U5	1810-0204	4	NETWORK-RES 8-PIN-SIP .1-PIN-SPCG	0248C	750-81-R1K
A11U6	1820-1688	1	IC DCDR TTL BCD-TO-7-SEG	0169H	SN74LS247N
A11U7	1858-0057	3	TRANSISTOR ARRAY 16-PIN PLSTC DIP	0192A	CA3082F
A11U8	1820-1200		IC INV TTL LS HEX 1-INP	0169H	SN74LS05N
A11U9	1820-1144		IC GATE TTL LS NOR QUAD 2-INP	0223G	9LS02PC
A11U10	1820-0586	1	IC INV TTL L HEX 1-INP	0340F	DM74L04N
A11U11	1810-0205	6	NETWORK-RES 8-PIN-SIP .1-PIN-SPCG	0248C	750-81-R4.7K
A11U12	1810-0205		NETWORK-RES 8-PIN-SIP .1-PIN-SPCG	0248C	750-81-R4.7K
A11U13	1820-0471	5	IC INV TTL HEX 1-INP	0223G	7406PC
A11U14	1820-1198	2	IC GATE TTL LS NAND QUAD 2-INP	0169H	SN74LS03N
A11U15	1820-1216	3	IC DCDR TTL LS 3-TO-8-LINE 3-INP	0379D	SN74LS138N
A11U16	1820-0798	1	IC CNTR MOS DECD	28480	1820-0798
A11U17	1820-1534	1	IC GATE CMOS NOR QUAD 2-INP	0203G	MC14001CL
A11U18	1820-0471		IC INV TTL HEX 1-INP	0223G	7406PC
A11U19	1820-1445	1	IC LCH TTL LS 4-BIT	0169H	SN74LS375N
A11U20	1820-1202	1	IC GATE TTL LS NAND TPL 3-INP	0223G	9LS10PC
A11U21	1820-1443		IC CNTR TTL LS BIN ASYNCHRO	0169H	SN74LS293N
A11U22	1820-1112	2	IC FF TTL LS D-TYPE POS-EDGE-TRIG	0169H	SN74LS74N
A11U23	1810-0205		NETWORK-RES 8-PIN-SIP .1-PIN-SPCG	0248C	750-81-R4.7K
A11VR1	1902-0048	4	DIODE-ZNR 6.81V 5% DO-7 PD=.4W TC=+.043%	0223G	FZ7244
A11VR2	1902-3036	3	DIODE-ZNR 3.16V 5% DO-7 PD=.4W TC=-.064%	0203G	BZ 10939-38
A11Y1	0410-0467	1	CRYSTAL 3.0 MHZ	28480	0410-0467
A12	08565-60016	1	ASSEMBLY, DVM ANALOG	28480	08565-60016
A12C1	0160-2204	3	CAPACITOR-FXD 100PF +-5% 300VDC MICA0+70	28480	0160-2204
A12C2	0160-2207	7	CAPACITOR-FXD 300PF +-5% 300VDC MICA0+70	28480	0160-2207
A12C3	0180-2208		CAPACITOR-FXD 220UF+-10% 10VDC TA	0420J	150D227X901082
A12C4	0180-1746		CAPACITOR-FXD 15UF+-10% 20VDC TA	0420J	150D156X9020B2
A12C5	0180-1746		CAPACITOR-FXD 15UF+-10% 20VDC TA	0420J	150D156X9020B2
A12C6	0160-2199	4	CAPACITOR-FXD 30PF +-5% 300VDC	28480	0160-2199
A12C7	0160-2204		CAPACITOR-FXD 100PF +-5% 300VDC MICA0+70	28480	0160-2204
A12C8	0160-4084		CAPACITOR-FXD .1UF +-20% 50VDC CER	28480	0160-4084
A12C9	5080-9047	1	CAPACITOR	28480	5080-9047
A12C10	0160-2207		CAPACITOR-FXD 300PF +-5% 300VDC MICA0+70	28480	0160-2207
A12C11	0160-4084		CAPACITOR-FXD .1UF +-20% 50VDC CER	28480	0160-4084
A12C12	0160-4084		CAPACITOR-FXD .1UF +-20% 50VDC CER	28480	0160-4084
A12C13	0160-0575	1	CAPACITOR-FXD .047UF +-20% 50VDC CER	28480	0160-0575
A12C14	0160-3456		CAPACITOR-FXD 1000PF +-10% 1KVDC CER	28480	0160-3456
A12C15	0180-2182	2	CAPACITOR-FXD 18UF+-10% 50VDC TA	0420J	150D186X9050B2
A12C16	0160-2199		CAPACITOR-FXD 30PF +-5% 300VDC	28480	0160-2199
A12C17	0170-0066	2	CAPACITOR-FXD .027UF +-10% 200VDC POLYE	0420J	292P27392
A12C18	0170-0066		CAPACITOR-FXD .027UF +-10% 200VDC POLYE	0420J	292P27392
A12C19	0160-4084		CAPACITOR-FXD .1UF +-20% 50VDC CER	28480	0160-4084
A12C20	0160-4084		CAPACITOR-FXD .1UF +-20% 50VDC CER	28480	0160-4084
A12C21	0160-3501	1	CAPACITOR-FXD 4UF +-10% 50VDC MET-POLYC	28480	0160-3501
A12C22	0160-2055		CAPACITOR-FXD .01UF +80-20% 100VDC CER	28480	0160-2055
A12CR1	1901-0050		DIODE-SWITCHING 80V 200MA 2NS DO-7	28480	1901-0050
A12CR2	1901-0050		DIODE-SWITCHING 80V 200MA 2NS DO-7	28480	1901-0050
A12CR3	1901-0050		DIODE-SWITCHING 80V 200MA 2NS DO-7	28480	1901-0050
A12CR4	1901-0050		DIODE-SWITCHING 80V 200MA 2NS DO-7	28480	1901-0050
A12CR5	1901-0376	4	DIODE-GEN PRP 35V 50MA DO-7	28480	1901-0376
A12CR6	1901-0050		DIODE-SWITCHING 80V 200MA 2NS DO-7	28480	1901-0050
A12CR7	1901-0050		DIODE-SWITCHING 80V 200MA 2NS DO-7	28480	1901-0050
A12CR8	1901-0376		DIODE-GEN PRP 35V 50MA DO-7	28480	1901-0376
A12CR9	1901-0050		DIODE-SWITCHING 80V 200MA 2NS DO-7	28480	1901-0050
A12CR10	1901-0376		DIODE-GEN PRP 35V 50MA DO-7	28480	1901-0376
A12CR11	1901-0586	1	DIODE-GEN PRP 30V 25MA TO-72	28480	1901-0586
A12CR12	1901-0050		DIODE-SWITCHING 80V 200MA 2NS DO-7	28480	1901-0050
A12E1	0340-0060	18	TERMINAL-STUD SPCL-FDTHRU PRESS-MTG	0576I	FT-E-15
A12E2	0340-0060		TERMINAL-STUD SPCL-FDTHRU PRESS-MTG	0576I	FT-E-15
A12E3	0340-0060		TERMINAL-STUD SPCL-FDTHRU PRESS-MTG	0576I	FT-E-15
A12E4	0340-0060		TERMINAL-STUD SPCL-FDTHRU PRESS-MTG	0576I	FT-E-15
A12E5	0340-0060		TERMINAL-STUD SPCL-FDTHRU PRESS-MTG	0576I	FT-E-15
A12E6	0340-0060		TERMINAL-STUD SPCL-FDTHRU PRESS-MTG	0576I	FT-E-15
A12E7	0340-0060		TERMINAL-STUD SPCL-FDTHRU PRESS-MTG	0576I	FT-E-15
A12E8	0340-0060		TERMINAL-STUD SPCL-FDTHRU PRESS-MTG	0576I	FT-E-15

See introduction to this section for ordering information

Scans by ARTEK MEDIA =>

Table 6-2. Replaceable Parts

Reference Designation	HP Part Number	Qty	Description	Mfr Code	Mfr Part Number
A12L1	9140-0129	2	COIL-MLD 220UH 5% Q=65 .155DX.375LG	02178	15-1315-20J
A12L2	9140-0129		COIL-MLD 220UH 5% Q=65 .155DX.375LG	02178	15-1315-20J
A12MP1	1480-0073		PIN;DRIVE 0.250" LG	0000J	OBD
A12MP2	1480-0073		PIN;DRIVE 0.250" LG	0000J	OBD
A12MP3	4040-0748		EXTRACTOR-PC BOARD BLK POLYC	28480	4040-0748
A12MP4	4040-0749	2	EXTRACTOR-PC BOARD BRN POLYC	28480	4040-0749
A12Q1	1854-0023	3	TRANSISTOR NPN SI TO-18 PD=360MW	28480	1854-0023
A12Q2	1853-0034	7	TRANSISTOR PNP SI TO-18 PD=360MW	28480	1853-0034
A12Q3	1855-0093	1	TRANSISTOR J-FET N-CHAN D-MODE TO-18 SI	28480	1855-0093
A12Q4	1855-0412	2	TRANSISTOR J-FET N-CHAN D-MODE TO-18 SI	28480	1855-0412
A12Q5	1855-0308	1	TRANSISTOR-JFET DUAL N-CHAN D-MODE SI	28480	1855-0308
A12Q6	1854-0023		TRANSISTOR NPN SI TO-18 PD=360MW	28480	1854-0023
A12Q7	1855-0412		TRANSISTOR J-FET N-CHAN D-MODE TO-18 SI	28480	1855-0412
A12Q8	1854-0023		TRANSISTOR NPN SI TO-18 PD=360MW	28480	1854-0023
A12Q9	1855-0418	1	TRANSISTOR-JFET DUAL N-CHAN D-MODE SI	28480	1855-0418
A12Q10	1855-0305	4	TRANSISTOR J-FET 2N4117A N-CHAN D-MODE	0288C	2N4117A
A12Q11	1855-0305		TRANSISTOR J-FET 2N4117A N-CHAN D-MODE	0288C	2N4117A
A12Q12	1855-0305		TRANSISTOR J-FET 2N4117A N-CHAN D-MODE	0288C	2N4117A
A12Q13	1855-0305		TRANSISTOR J-FET 2N4117A N-CHAN D-MODE	0288C	2N4117A
A12Q14	1853-0034		TRANSISTOR PNP SI TO-18 PD=360MW	28480	1853-0034
A12Q15	1853-0034		TRANSISTOR PNP SI TO-18 PD=360MW	28480	1853-0034
A12Q16	1853-0034		TRANSISTOR PNP SI TO-18 PD=360MW	28480	1853-0034
A12Q17	1853-0034		TRANSISTOR PNP SI TO-18 PD=360MW	28480	1853-0034
A12R1	0698-8829	3	RESISTOR 20K .1% .125W F TC=0+-10	0227C	MAR6
A12R2	0698-8839	1	RESISTOR 2.2222K .1% .125W F TC=0+-10	0227C	MAR6
A12R3	0683-5645	1	RESISTOR 560K 5% .25W FC TC=-800/+900	0160G	CB5645
A12R4	0757-0442		RESISTOR 10K 1% .125W F TC=0+-100	0329B	C4-1/8-T0-1002-F
A12R5	0698-0085	14	RESISTOR 2.61K 1% .125W F TC=0+-100	0329B	C4-1/8-T0-2611-F
A12R6	0757-0442		RESISTOR 10K 1% .125W F TC=0+-100	0329B	C4-1/8-T0-1002-F
A12R7	0698-3454		RESISTOR 215K 1% .125W F TC=0+-100	0329B	C4-1/8-T0-2153-F
A12R8	0757-0442		RESISTOR 10K 1% .125W F TC=0+-100	0329B	C4-1/8-T0-1002-F
A12R9	0698-0085		RESISTOR 2.61K 1% .125W F TC=0+-100	0329B	C4-1/8-T0-2611-F
A12R10	0757-0442		RESISTOR 10K 1% .125W F TC=0+-100	0329B	C4-1/8-T0-1002-F
A12R11	0698-3454		RESISTOR 215K 1% .125W F TC=0+-100	0329B	C4-1/8-T0-2153-F
A12R12	0698-3454		RESISTOR 215K 1% .125W F TC=0+-100	0329B	C4-1/8-T0-2153-F
A12R13	0698-3558	3	RESISTOR 4.02K 1% .125W F TC=0+-100	0329B	C4-1/8-T0-4021-F
A12R14	0757-0280		RESISTOR 1K 1% .125W F TC=0+-100	0329B	C4-1/8-T0-1001-F
A12R15	0757-0442		RESISTOR 10K 1% .125W F TC=0+-100	0329B	C4-1/8-T0-1002-F
A12R16	0698-0085		RESISTOR 2.61K 1% .125W F TC=0+-100	0329B	C4-1/8-T0-2611-F
A12R17	0757-0442		RESISTOR 10K 1% .125W F TC=0+-100	0329B	C4-1/8-T0-1002-F
A12R18	2100-3353	2	RESISTOR-TRMR 20K 10% C SIDE-ADJ 1-TRN	0374D	3386X-Y46-203
A12R19	0698-8829		RESISTOR 20K .1% .125W F TC=0+-10	0227C	MAR6
A12R20	0698-3157	22	RESISTOR 19.6K 1% .125W F TC=0+-100	0329B	C4-1/8-T0-1962-F
A12R21	0698-8840	1	RESISTOR 2.1885K .1% .125W F TC=0+-10	0227C	MAR6
A12R22	0698-3430	1	RESISTOR 21.5 1% .125W F TC=0+-100	03888	PME55-1/8-T0-21R5-F
A12R23	0757-0442		RESISTOR 10K 1% .125W F TC=0+-100	0329B	C4-1/8-T0-1002-F
A12R24	0698-0085		RESISTOR 2.61K 1% .125W F TC=0+-100	0329B	C4-1/8-T0-2611-F
A12R25	0757-0442		RESISTOR 10K 1% .125W F TC=0+-100	0329B	C4-1/8-T0-1002-F
A12R26	0698-3160		RESISTOR 31.6K 1% .125W F TC=0+-100	0329B	C4-1/8-T0-3162-F
A12R27	0757-0279		RESISTOR 3.16K 1% .125W F TC=0+-100	0329B	C4-1/8-T0-3161-F
A12R28	0757-0442		RESISTOR 10K 1% .125W F TC=0+-100	0329B	C4-1/8-T0-1002-F
A12R29	0757-0279		RESISTOR 3.16K 1% .125W F TC=0+-100	0329B	C4-1/8-T0-3161-F
A12R30	0757-0465		RESISTOR 100K 1% .125W F TC=0+-100	0329B	C4-1/8-T0-1003-F
A12R31	0757-0449	6	RESISTOR 20K 1% .125W F TC=0+-100	0329B	C4-1/8-T0-2002-F
A12R32	0757-0459		RESISTOR 56.2K 1% .125W F TC=0+-100	0329B	C4-1/8-T0-5622-F
A12R33	0757-0449		RESISTOR 20K 1% .125W F TC=0+-100	0329B	C4-1/8-T0-2002-F
A12R34	0757-0449		RESISTOR 20K 1% .125W F TC=0+-100	0329B	C4-1/8-T0-2002-F
A12R35	0757-0442		RESISTOR 10K 1% .125W F TC=0+-100	0329B	C4-1/8-T0-1002-F
A12R36	0698-3558		RESISTOR 4.02K 1% .125W F TC=0+-100	0329B	C4-1/8-T0-4021-F
A12R37	2100-3212	1	RESISTOR-TRMR 200 10% C TOP-ADJ 1-TRN	73138	72-103-0
A12R38	0757-0442		RESISTOR 10K 1% .125W F TC=0+-100	0329B	C4-1/8-T0-1002-F
A12R39	0757-0442		RESISTOR 10K 1% .125W F TC=0+-100	0329B	C4-1/8-T0-1002-F
A12R40	0698-3558		RESISTOR 4.02K 1% .125W F TC=0+-100	0329B	C4-1/8-T0-4021-F
A12R41	0757-0449		RESISTOR 20K 1% .125W F TC=0+-100	0329B	C4-1/8-T0-2002-F
A12R42	0757-0449		RESISTOR 20K 1% .125W F TC=0+-100	0329B	C4-1/8-T0-2002-F
A12R43	0698-0084		RESISTOR 2.15K 1% .125W F TC=0+-100	0329B	C4-1/8-T0-2151-F
A12R44	0757-0442		RESISTOR 10K 1% .125W F TC=0+-100	0329B	C4-1/8-T0-1002-F
A12R45	0698-3432	1	RESISTOR 26.1 1% .125W F TC=0+-100	03888	PME55-1/8-T0-26R1-F
A12R46	0698-3132	4	RESISTOR 261 1% .125W F TC=0+-100	0329B	C4-1/8-T0-2610-F
A12R47	0757-0288	4	RESISTOR 9.09K 1% .125W F TC=0+-100	0299E	MF4C1/8-T0-9091-F
A12R48	0757-0280		RESISTOR 1K 1% .125W F TC=0+-100	0329B	C4-1/8-T0-1001-F
A12R49	0698-0083		RESISTOR 1.96K 1% .125W F TC=0+-100	0329B	C4-1/8-T0-1961-F
A12R50	0698-3157		RESISTOR 19.6K 1% .125W F TC=0+-100	0329B	C4-1/8-T0-1962-F

See introduction to this section for ordering information

Scans by ARTEK MEDIA =>

Table 6-2. Replaceable Parts

Reference Designation	HP Part Number	Qty	Description	Mfr Code	Mfr Part Number
A12R51	0698-3443	2	RESISTOR 287 1% .125W F TC=0+-100	03298	C4-1/8-T0-287R-F
A12R52	0757-0428	7	RESISTOR 1.62K 1% .125W F TC=0+-100	03298	C4-1/8-T0-1621-F
A12R53	2100-3207		RESISTOR-TRMR 5K 10% C SIDE-ADJ 1-TRN	73138	72-145-0
A12R54	0698-3159	2	RESISTOR 26.1K 1% .125W F TC=0+-100	03298	C4-1/8-T0-2612-F
A12R55	0698-3445	4	RESISTOR 348 1% .125W F TC=0+-100	03298	C4-1/8-T0-348R-F
A12R56	2100-3353		RESISTOR-TRMR 20K 10% C SIDE-ADJ 1-TRN	03740	3386X-Y46-203
A12R57	0698-3450		RESISTOR 42.2K 1% .125W F TC=0+-100	03298	C4-1/8-T0-4222-F
A12R58	0757-0459		RESISTOR 56.2K 1% .125W F TC=0+-100	03298	C4-1/8-T0-5622-F
A12S1	3101-1274	3	SWITCH-SL SPDT-NS SUBMIN 2A 120VAC PC	10389	23-021-008
A12U1	1820-0223	5	IC 301 OP AMP	03790	LM301A
A12U2	1820-0223		IC 301 OP AMP	03790	LM301A
A12U3	1826-0009	1	IC 725 OP AMP	02223G	725HC
A12U4	1820-0223		IC 301 OP AMP	03790	LM301A
A12U5	1820-0321	1	IC 710 COMPARATOR	02223G	710HC
A12U6	1820-1211	1	IC GATE TTL LS EXCL-OR QUAD 2-INP	0169H	SN74LS86N
A12U7	1820-1197		IC GATE TTL LS NAND QUAD 2-INP	0169H	SN74LS00N
A12U8	1820-1195	1	IC FF TTL LS D-TYPE POS-EDGE-TRIG COM	03790	AM74LS175A
A12U9	1820-1197		IC GATE TTL LS NAND QUAD 2-INP	0169H	SN74LS00N
A12VR1	1902-0041		DIODE-ZNR 5.11V 5% DO-7 PD=.4W TC=-.009%	02203G	SZ 10939-98
A12VR2	1902-0025	8	DIODE-ZNR 10V 5% DO-7 PD=.4W TC=+.06%	02223G	FZ7260
A12VR3	1902-3036		DIODE-ZNR 3.16V 5% DO-7 PD=.4W TC=-.064%	02203G	SZ 10939-38
A13	08565-60017	1	ASSEMBLY, RELAY DRIVER	28480	08565-60017
A13CR1	1901-0050		DIODE-SWITCHING 80V 200MA 2NS DO-7	28480	1901-0050
A13CR2	1901-0050		DIODE-SWITCHING 80V 200MA 2NS DO-7	28480	1901-0050
A13CR3	1901-0050		DIODE-SWITCHING 80V 200MA 2NS DO-7	28480	1901-0050
A13CR4	1901-0539	3	DIODE-SCHOTTKY	28480	1901-0539
A13CR5	1901-0050		DIODE-SWITCHING 80V 200MA 2NS DO-7	28480	1901-0050
A13CR6	1901-0050		DIODE-SWITCHING 80V 200MA 2NS DO-7	28480	1901-0050
A13CR7	1901-0050		DIODE-SWITCHING 80V 200MA 2NS DO-7	28480	1901-0050
A13CR8	1901-0050		DIODE-SWITCHING 80V 200MA 2NS DO-7	28480	1901-0050
A13CR9	1901-0050		DIODE-SWITCHING 80V 200MA 2NS DO-7	28480	1901-0050
A13CR10	1901-0050		DIODE-SWITCHING 80V 200MA 2NS DO-7	28480	1901-0050
A13CR11	1901-0050		DIODE-SWITCHING 80V 200MA 2NS DO-7	28480	1901-0050
A13CR12	1901-0050		DIODE-SWITCHING 80V 200MA 2NS DO-7	28480	1901-0050
A13CR13	1901-0050		DIODE-SWITCHING 80V 200MA 2NS DO-7	28480	1901-0050
A13CR14	1901-0050		DIODE-SWITCHING 80V 200MA 2NS DO-7	28480	1901-0050
A13CR15	1901-0050		DIODE-SWITCHING 80V 200MA 2NS DO-7	28480	1901-0050
A13CR16	1901-0050		DIODE-SWITCHING 80V 200MA 2NS DO-7	28480	1901-0050
A13CR17	1901-0050		DIODE-SWITCHING 80V 200MA 2NS DO-7	28480	1901-0050
A13CR18	1901-0159		DIODE-PWR RECT 400V 750MA DO-41	02203G	SR1358-4
A13CR19	1901-0050		DIODE-SWITCHING 80V 200MA 2NS DO-7	28480	1901-0050
A13CR20	1901-0050		DIODE-SWITCHING 80V 200MA 2NS DO-7	28480	1901-0050
A13CR21	1901-0159		DIODE-PWR RECT 400V 750MA DO-41	02203G	SR1358-4
A13CR22	1901-0050		DIODE-SWITCHING 80V 200MA 2NS DO-7	28480	1901-0050
A13CR23	1901-0159		DIODE-PWR RECT 400V 750MA DO-41	02203G	SR1358-4
A13CR24	1901-0050		DIODE-SWITCHING 80V 200MA 2NS DO-7	28480	1901-0050
A13CR25	1901-0050		DIODE-SWITCHING 80V 200MA 2NS DO-7	28480	1901-0050
A13MP1	1480-0073		PIN:DRIVE 0.250" LG	0000J	OBD
A13MP2	1480-0073		PIN:DRIVE 0.250" LG	0000J	OBD
A13MP3	4040-0748		EXTRACTOR-PC BOARD BLK POLYC	28480	4040-0748
A13MP4	4040-0750		EXTRACTOR-PC BOARD RED POLYC	28480	4040-0750
A13Q1	1854-0404		TRANSISTOR NPN SI TO-18 PD=360MW	28480	1854-0404
A13Q2	1854-0404		TRANSISTOR NPN SI TO-18 PD=360MW	28480	1854-0404
A13Q3	1853-0007		TRANSISTOR PNP 2N3251 SI TO-18 PD=360MW	02203G	2N3251
A13Q4	1854-0404		TRANSISTOR NPN SI TO-18 PD=360MW	28480	1854-0404
A13Q5	1854-0404		TRANSISTOR NPN SI TO-18 PD=360MW	28480	1854-0404
A13Q6	1854-0404		TRANSISTOR NPN SI TO-18 PD=360MW	28480	1854-0404
A13Q7	1854-0404		TRANSISTOR NPN SI TO-18 PD=360MW	28480	1854-0404
A13Q8	1854-0637	4	TRANSISTOR NPN 2N2219A SI TO-5 PD=800MW	28480	1854-0637
A13Q9	1854-0637		TRANSISTOR NPN 2N2219A SI TO-5 PD=800MW	28480	1854-0637
A13Q10	1854-0637		TRANSISTOR NPN 2N2219A SI TO-5 PD=800MW	28480	1854-0637
A13R1	0757-0458		RESISTOR 51.1K 1% .125W F TC=0+-100	03298	C4-1/8-T0-5112-F
A13R2	0757-0199		RESISTOR 21.5K 1% .125W F TC=0+-100	03298	C4-1/8-T0-2152-F
A13R3	0757-0199		RESISTOR 21.5K 1% .125W F TC=0+-100	03298	C4-1/8-T0-2152-F
A13R4	0757-0428		RESISTOR 5.11K 1% .125W F TC=0+-100	03298	C4-1/8-T0-5111-F
A13R5	0698-0084		RESISTOR 2.15K 1% .125W F TC=0+-100	03298	C4-1/8-T0-2151-F
A13R6	0757-0199		RESISTOR 21.5K 1% .125W F TC=0+-100	03298	C4-1/8-T0-2152-F
A13R7	0757-0199		RESISTOR 21.5K 1% .125W F TC=0+-100	03298	C4-1/8-T0-2152-F
A13R8	0698-0083		RESISTOR 1.96K 1% .125W F TC=0+-100	03298	C4-1/8-T0-1961-F
A13R9	0757-0199		RESISTOR 21.5K 1% .125W F TC=0+-100	03298	C4-1/8-T0-2152-F
A13R10	0757-0199		RESISTOR 21.5K 1% .125W F TC=0+-100	03298	C4-1/8-T0-2152-F

See introduction to this section for ordering information

Scans by ARTEK MEDIA =>

Table 6-2. Replaceable Parts

Reference Designation	HP Part Number	Qty	Description	Mfr Code	Mfr Part Number
A13R11	0757-0199		RESISTOR 21.5K 1% .125W F TC=0+-100	03298	C4-1/8-T0-2152-F
A13R12	0757-0199		RESISTOR 21.5K 1% .125W F TC=0+-100	03298	C4-1/8-T0-2152-F
A13R13	0757-0199		RESISTOR 21.5K 1% .125W F TC=0+-100	03298	C4-1/8-T0-2152-F
A13R14	0757-0199		RESISTOR 21.5K 1% .125W F TC=0+-100	03298	C4-1/8-T0-2152-F
A13R15	0757-0279		RESISTOR 3.16K 1% .125W F TC=0+-100	03298	C4-1/8-T0-3161-F
A13R16	0757-0428		RESISTOR 1.62K 1% .125W F TC=0+-100	03298	C4-1/8-T0-1621-F
A13R17	0757-0199		RESISTOR 21.5K 1% .125W F TC=0+-100	03298	C4-1/8-T0-2152-F
A13R18	0757-0159	1	RESISTOR 1K 1% .5W F TC=0+-100	0299E	MF7C1/2-T0-1R0-F
A13R19	0757-0199		RESISTOR 21.5K 1% .125W F TC=0+-100	03298	C4-1/8-T0-2152-F
A13U1	1820-1112		IC FF TTL LS D-TYPE POS-EDGE-TRIG	0169M	SN74LS74N
A14	08565-60018	1	ASSEMBLY, TUNING STABILIZER CONTROL	28480	08565-60018
A14C1	0180-1743	6	CAPACITOR-FXD .1UF+-10% 35VDC TA	0420J	150D104X9035A2
A14C2	0180-0291	7	CAPACITOR-FXD 1UF+-10% 35VDC TA	0420J	150D105X9035A2
A14C3	0180-1743		CAPACITOR-FXD .1UF+-10% 35VDC TA	0420J	150D104X9035A2
A14C4	0180-1743		CAPACITOR-FXD .1UF+-10% 35VDC TA	0420J	150D104X9035A2
A14C5	0180-1743		CAPACITOR-FXD .1UF+-10% 35VDC TA	0420J	150D104X9035A2
A14C6	0160-3875	9	CAPACITOR-FXD 22PF +-5% 200VDC CER0+-30	28480	0160-3875
A14C7	0160-0158	1	CAPACITOR-FXD 5600PF +-10% 200VDC POLYE	0420J	292P56292
A14C8	0180-0291		CAPACITOR-FXD 1UF+-10% 35VDC TA	0420J	150D105X9035A2
A14C9	0160-3877	8	CAPACITOR-FXD 100PF +-20% 200VDC CER	28480	0160-3877
A14C10	0160-3875		CAPACITOR-FXD 22PF +-5% 200VDC CER0+-30	28480	0160-3875
A14C11	0160-3473	1	CAPACITOR-FXD .039UF +-5% 100VDC	01884	AF9A18393J
A14C12	0160-0162	2	CAPACITOR-FXD .022UF +-10% 200VDC POLYE	0420J	292P22392
A14C13	0160-3875		CAPACITOR-FXD 22PF +-5% 200VDC CER0+-30	28480	0160-3875
A14C14	0160-0157	1	CAPACITOR-FXD 4700PF +-10% 200VDC POLYE	0420J	292P47292
A14C15	0180-0229		CAPACITOR-FXD 33UF+-10% 10VDC TA	0420J	150D336X9010B2
A14C16	0160-3875		CAPACITOR-FXD 22PF +-5% 200VDC CER0+-30	28480	0160-3875
A14C17	0160-3875		CAPACITOR-FXD 22PF +-5% 200VDC CER0+-30	28480	0160-3875
A14C18	0160-3875		CAPACITOR-FXD 22PF +-5% 200VDC CER0+-30	28480	0160-3875
A14C19	0160-0571	1	CAPACITOR-FXD 470PF +-20% 100VDC CER	28480	0160-0571
A14C20	0180-1731	10	CAPACITOR-FXD 4.7UF+-10% 50VDC TA	0420J	150D475X9050B2
A14C21	0180-2249	2	CAPACITOR-FXD 47UF+-10% 20VDC TA	0420J	150D476X9020R2
A14C22	0180-2249		CAPACITOR-FXD 47UF+-10% 20VDC TA	0420J	150D476X9020R2
A14C23	0180-1731		CAPACITOR-FXD 4.7UF+-10% 50VDC TA	0420J	150D475X9050B2
A14CR1	1901-0050		DIODE-SWITCHING 80V 200MA 2NS DO-7	28480	1901-0050
A14CR2	1901-0050		DIODE-SWITCHING 80V 200MA 2NS DO-7	28480	1901-0050
A14CR3	1901-0050		DIODE-SWITCHING 80V 200MA 2NS DO-7	28480	1901-0050
A14CR4	1901-0050		DIODE-SWITCHING 80V 200MA 2NS DO-7	28480	1901-0050
A14CR5	1901-0050		DIODE-SWITCHING 80V 200MA 2NS DO-7	28480	1901-0050
A14CR6	1901-0050		DIODE-SWITCHING 80V 200MA 2NS DO-7	28480	1901-0050
A14CR7	1901-0050		DIODE-SWITCHING 80V 200MA 2NS DO-7	28480	1901-0050
A14CR8	1901-0050		DIODE-SWITCHING 80V 200MA 2NS DO-7	28480	1901-0050
A14CR9	1901-0050		DIODE-SWITCHING 80V 200MA 2NS DO-7	28480	1901-0050
A14CR10	1901-0050		DIODE-SWITCHING 80V 200MA 2NS DO-7	28480	1901-0050
A14CR11	1901-0050		DIODE-SWITCHING 80V 200MA 2NS DO-7	28480	1901-0050
A14E1	0340-0037	1	TERMINAL-STUD DBL-TUR PRESS-MTG	28480	0340-0037
A14K1	0490-0782	1	RELAY-REED 1A 100MA 250VAC 9VDC-COIL 3VA	28480	0490-0782
A14MP1	0340-0039	5	TERMINAL BUSHING - TEFLON; MOUNTS IN	28480	0340-0039
A14MP2	1480-0073		PIN;DRIVE 0.250" LG	0000J	OBD
A14MP3	1480-0073		PIN;DRIVE 0.250" LG	0000J	OBD
A14MP4	4040-0748		EXTRACTOR-PC BOARD BLK POLYC	28480	4040-0748
A14MP5	4040-0751		EXTRACTOR-PC BOARD ORN POLYC	28480	4040-0751
A14Q1	1854-0404		TRANSISTOR NPN SI TO-18 PD=360MW	28480	1854-0404
A14Q2	1853-0314	2	TRANSISTOR PNP 2N2905A SI TO-39 PD=600MW	02203	2N2905A
A14Q3	1854-0404		TRANSISTOR NPN SI TO-18 PD=360MW	28480	1854-0404
A14Q4	1853-0007		TRANSISTOR PNP 2N3251 SI TO-18 PD=360MW	02203	2N3251
A14Q5	1854-0404		TRANSISTOR NPN SI TO-18 PD=360MW	28480	1854-0404
A14Q6	1853-0007		TRANSISTOR PNP 2N3251 SI TO-18 PD=360MW	02203	2N3251
A14Q7	1853-0007		TRANSISTOR PNP 2N3251 SI TO-18 PD=360MW	02203	2N3251
A14Q8	1853-0007		TRANSISTOR PNP 2N3251 SI TO-18 PD=360MW	02203	2N3251
A14Q9	1853-0007		TRANSISTOR PNP 2N3251 SI TO-18 PD=360MW	02203	2N3251
A14Q10	1853-0007		TRANSISTOR PNP 2N3251 SI TO-18 PD=360MW	02203	2N3251
A14Q11	1854-0404		TRANSISTOR NPN SI TO-18 PD=360MW	28480	1854-0404
A14Q12	1853-0007		TRANSISTOR PNP 2N3251 SI TO-18 PD=360MW	02203	2N3251
A14Q13	1854-0404		TRANSISTOR NPN SI TO-18 PD=360MW	28480	1854-0404
A14Q14	1853-0007		TRANSISTOR PNP 2N3251 SI TO-18 PD=360MW	02203	2N3251
A14Q15	1854-0404		TRANSISTOR NPN SI TO-18 PD=360MW	28480	1854-0404
A14Q16	1853-0007		TRANSISTOR PNP 2N3251 SI TO-18 PD=360MW	02203	2N3251
A14Q17	1854-0637		TRANSISTOR NPN 2N2219A SI TO-5 PD=800MW	28480	1854-0637
A14Q18	1853-0314		TRANSISTOR PNP 2N2905A SI TO-39 PD=600MW	02203	2N2905A
A14Q19	1855-0020		TRANSISTOR J-FET N-CHAN D-MODE TO-18 SI	28480	1855-0020
A14Q20	1855-0098	1	TRANSISTOR P-CHAN E-MODE TO-72 SI	28480	1855-0098

See introduction to this section for ordering information

Scans by ARTEK MEDIA =>

Table 6-2. Replaceable Parts

Reference Designation	HP Part Number	Qty	Description	Mfr Code	Mfr Part Number
A14Q21	1854-0404		TRANSISTOR NPN SI TO-18 PD=360MW	28480	1854-0404
A14Q22	1853-0007		TRANSISTOR PNP 2N3251 SI TO-18 PD=360MW	02030	2N3251
A14Q23	1855-0020		TRANSISTOR J-FET N-CHAN D-MODE TO-18 SI	28480	1855-0020
A14R1	0698-3450		RESISTOR 42.2K 1% .125W F TC=0+-100	03298	C4-1/8-T0-4222-F
A14R2	0698-3260		RESISTOR 464K 1% .125W F TC=0+-100	01600	CC
A14R3	0698-3450		RESISTOR 42.2K 1% .125W F TC=0+-100	03298	C4-1/8-T0-4222-F
A14R4	0698-3450		RESISTOR 42.2K 1% .125W F TC=0+-100	03298	C4-1/8-T0-4222-F
A14R5	0698-3450		RESISTOR 42.2K 1% .125W F TC=0+-100	03298	C4-1/8-T0-4222-F
A14R6	0698-3260		RESISTOR 464K 1% .125W F TC=0+-100	01600	CC
A14R7	0698-3450		RESISTOR 42.2K 1% .125W F TC=0+-100	03298	C4-1/8-T0-4222-F
A14R8	0698-3450		RESISTOR 42.2K 1% .125W F TC=0+-100	03298	C4-1/8-T0-4222-F
A14R9	0698-3450		RESISTOR 42.2K 1% .125W F TC=0+-100	03298	C4-1/8-T0-4222-F
A14R10	0698-3260		RESISTOR 464K 1% .125W F TC=0+-100	01600	CC
A14R11	0698-3450		RESISTOR 42.2K 1% .125W F TC=0+-100	03298	C4-1/8-T0-4222-F
A14R12	0698-3450		RESISTOR 42.2K 1% .125W F TC=0+-100	03298	C4-1/8-T0-4222-F
A14R13	0698-3450		RESISTOR 42.2K 1% .125W F TC=0+-100	03298	C4-1/8-T0-4222-F
A14R14	0698-3260		RESISTOR 464K 1% .125W F TC=0+-100	01600	CC
A14R15	0698-3260		RESISTOR 464K 1% .125W F TC=0+-100	01600	CC
A14R16	0698-3260		RESISTOR 464K 1% .125W F TC=0+-100	01600	CC
A14R17	0698-3450		RESISTOR 42.2K 1% .125W F TC=0+-100	03298	C4-1/8-T0-4222-F
A14R18	0698-3450		RESISTOR 42.2K 1% .125W F TC=0+-100	03298	C4-1/8-T0-4222-F
A14R19	0698-3450		RESISTOR 42.2K 1% .125W F TC=0+-100	03298	C4-1/8-T0-4222-F
A14R20	0698-3260		RESISTOR 464K 1% .125W F TC=0+-100	01600	CC
A14R21	0698-3260		RESISTOR 464K 1% .125W F TC=0+-100	01600	CC
A14R22	0698-3450		RESISTOR 42.2K 1% .125W F TC=0+-100	03298	C4-1/8-T0-4222-F
A14R23	0757-0439		RESISTOR 6.81K 1% .125W F TC=0+-100	03298	C4-1/8-T0-6811-F
A14R24	0757-0442		RESISTOR 10K 1% .125W F TC=0+-100	03298	C4-1/8-T0-1002-F
A14R25	0698-3450		RESISTOR 42.2K 1% .125W F TC=0+-100	03298	C4-1/8-T0-4222-F
A14R26	0757-0464	2	RESISTOR 90.9K 1% .125W F TC=0+-100	03298	C4-1/8-T0-9092-F
A14R27	0698-3450		RESISTOR 42.2K 1% .125W F TC=0+-100	03298	C4-1/8-T0-4222-F
A14R28	0698-3260		RESISTOR 464K 1% .125W F TC=0+-100	01600	CC
A14R29	0698-3450		RESISTOR 42.2K 1% .125W F TC=0+-100	03298	C4-1/8-T0-4222-F
A14R30	0698-3454		RESISTOR 215K 1% .125W F TC=0+-100	03298	C4-1/8-T0-2153-F
A14R31	0698-3260		RESISTOR 464K 1% .125W F TC=0+-100	01600	CC
A14R32	0698-3450		RESISTOR 42.2K 1% .125W F TC=0+-100	03298	C4-1/8-T0-4222-F
A14R33	0698-3450		RESISTOR 42.2K 1% .125W F TC=0+-100	03298	C4-1/8-T0-4222-F
A14R34	0757-0442		RESISTOR 10K 1% .125W F TC=0+-100	03298	C4-1/8-T0-1002-F
A14R35	0757-0442		RESISTOR 10K 1% .125W F TC=0+-100	03298	C4-1/8-T0-1002-F
A14R36	0757-0465		RESISTOR 100K 1% .125W F TC=0+-100	03298	C4-1/8-T0-1003-F
A14R37	0757-0465		RESISTOR 100K 1% .125W F TC=0+-100	03298	C4-1/8-T0-1003-F
A14R38	0698-3136	7	RESISTOR 17.8K 1% .125W F TC=0+-100	03298	C4-1/8-T0-1782-F
A14R39	0698-3457		RESISTOR 316K 1% .125W F TC=0+-100	01600	CC
A14R40	0698-4002	1	RESISTOR 5K 1% .125W F TC=0+-100	03298	C4-1/8-T0-5001-F
A14R41	0757-0461		RESISTOR 68.1K 1% .125W F TC=0+-100	03298	C4-1/8-T0-6812-F
A14R42	0757-0442		RESISTOR 10K 1% .125W F TC=0+-100	03298	C4-1/8-T0-1002-F
A14R43	0757-0465		RESISTOR 100K 1% .125W F TC=0+-100	03298	C4-1/8-T0-1003-F
A14R44	0757-0442		RESISTOR 10K 1% .125W F TC=0+-100	03298	C4-1/8-T0-1002-F
A14R45	0698-3157		RESISTOR 19.6K 1% .125W F TC=0+-100	03298	C4-1/8-T0-1962-F
A14R46	0698-3449	4	RESISTOR 28.7K 1% .125W F TC=0+-100	03298	C4-1/8-T0-2872-F
A14R47	0698-3136		RESISTOR 17.8K 1% .125W F TC=0+-100	03298	C4-1/8-T0-1782-F
A14R48	0757-0465		RESISTOR 100K 1% .125W F TC=0+-100	03298	C4-1/8-T0-1003-F
A14R49	0698-3457		RESISTOR 316K 1% .125W F TC=0+-100	01600	CC
A14R50	0757-0442		RESISTOR 10K 1% .125W F TC=0+-100	03298	C4-1/8-T0-1002-F
A14R51	0757-0447		RESISTOR 16.2K 1% .125W F TC=0+-100	03298	C4-1/8-T0-1622-F
A14R52	0757-0199		RESISTOR 21.5K 1% .125W F TC=0+-100	03298	C4-1/8-T0-2152-F
A14R53	0683-1555	1	RESISTOR 1.5M 5% .25W FC TC=-900/+1100	01600	CB1555
A14R54	0757-0446	1	RESISTOR 15K 1% .125W F TC=0+-100	03298	C4-1/8-T0-1502-F
A14R55	0698-3459	1	RESISTOR 383K 1% .125W F TC=0+-100	01600	CC
A14R56	0757-0440		RESISTOR 7.5K 1% .125W F TC=0+-100	03298	C4-1/8-T0-7501-F
A14R57	2100-1739	3	RESISTOR-TRMR 5K 10% WW SIDE-ADJ 20-TRN	03740	3005P-1-502
A14R58	0757-0274	5	RESISTOR 1.21K 1% .125W F TC=0+-100	03298	C4-1/8-T0-1213-F
A14R59	0698-3452		RESISTOR 147K 1% .125W F TC=0+-100	03298	C4-1/8-T0-1473-F
A14R60	0698-3452		RESISTOR 147K 1% .125W F TC=0+-100	03298	C4-1/8-T0-1473-F
A14R61	0757-0466	1	RESISTOR 110K 1% .125W F TC=0+-100	03298	C4-1/8-T0-1103-F
A14R62	0757-0422	5	RESISTOR 909 1% .125W F TC=0+-100	03298	C4-1/8-T0-9090-F
A14R63	0757-0442		RESISTOR 10K 1% .125W F TC=0+-100	03298	C4-1/8-T0-1002-F
A14R64	0757-0279		RESISTOR 3.16K 1% .125W F TC=0+-100	03298	C4-1/8-T0-3161-F
A14R65	0757-0458		RESISTOR 51.1K 1% .125W F TC=0+-100	03298	C4-1/8-T0-5112-F
A14R66	0757-0442		RESISTOR 10K 1% .125W F TC=0+-100	03298	C4-1/8-T0-1002-F
A14R67	0757-0123	6	RESISTOR 34.8K 1% .125W F TC=0+-100	01600	CC
A14R68	2100-1972	30	RESISTOR-TRMR 20K 10% WW SIDE-ADJ 20-TRN	03740	3005P-1-203
A14R69	0757-0123		RESISTOR 34.8K 1% .125W F TC=0+-100	01600	CC
A14R70	0698-4008	1	RESISTOR 40K 1% .125W F TC=0+-100	03298	C4-1/8-T0-4002-F
A14R71	2100-1972		RESISTOR-TRMR 20K 10% WW SIDE-ADJ 20-TRN	03740	3005P-1-203
A14R72	0757-0199		RESISTOR 21.5K 1% .125W F TC=0+-100	03298	C4-1/8-T0-2152-F
A14R73	0698-6901	1	RESISTOR 32.8K .5% .125W F TC=0+-50	03298	NC55
A14R74	0698-8805	1	RESISTOR 10.35K .1% .125W F TC=0+-25	01107D	H8
A14R75	0698-3136		RESISTOR 17.8K 1% .125W F TC=0+-100	03298	C4-1/8-T0-1782-F

See introduction to this section for ordering information

Scans by ARTEK MEDIA =>

Table 6-2. Replaceable Parts

Reference Designation	HP Part Number	Qty	Description	Mfr Code	Mfr Part Number
A14R76	0757-0442		RESISTOR 10K 1% .125W F TC=0+-100	03298	C4-1/8-T0-1002-F
A14R77	0757-0442		RESISTOR 10K 1% .125W F TC=0+-100	03298	C4-1/8-T0-1002-F
A14R78	0757-0442		RESISTOR 10K 1% .125W F TC=0+-100	03298	C4-1/8-T0-1002-F
A14R79	0757-0401		RESISTOR 100 1% .125W F TC=0+-100	03298	C4-1/8-T0-101-F
A14R80	0757-0401		RESISTOR 100 1% .125W F TC=0+-100	03298	C4-1/8-T0-101-F
A14R81	0757-0442		RESISTOR 10K 1% .125W F TC=0+-100	03298	C4-1/8-T0-1002-F
A14R82	0698-3624	1	RESISTOR 150 5% 2W MO TC=0+-200	03418	FP-42
A14R83	0757-0465		RESISTOR 100K 1% .125W F TC=0+-100	03298	C4-1/8-T0-1003-F
A14R84	0757-0449		RESISTOR 20K 1% .125W F TC=0+-100	03298	C4-1/8-T0-2002-F
A14R85	0757-0401		RESISTOR 100 1% .125W F TC=0+-100	03298	C4-1/8-T0-101-F
A14R86	0757-0346		RESISTOR 10 1% .125W F TC=0+-100	03298	C4-1/8-T0-10R0-F
A14R87	0757-0346		RESISTOR 10 1% .125W F TC=0+-100	03298	C4-1/8-T0-10R0-F
A14R88	0757-0401		RESISTOR 100 1% .125W F TC=0+-100	03298	C4-1/8-T0-101-F
A14U1	1826-0261	37	IC 741 OP AMP	28480	1826-0261
A14U2	1820-0223		IC 301 OP AMP	03790	LM301A
A14U3	1826-0092	20	IC OP AMP	28480	1826-0092
A14U4	1826-0261		IC 741 OP AMP	28480	1826-0261
A14U5	1826-0261		IC 741 OP AMP	28480	1826-0261
A14U6	1826-0261		IC 741 OP AMP	28480	1826-0261
A14U7	1826-0261		IC 741 OP AMP	28480	1826-0261
A14U8	1826-0261		IC 741 OP AMP	28480	1826-0261
A15	08565-60032	1	ASSEMBLY, SWEEP ATTENUATOR	28480	08565-60032
A15C1	0160-3875		CAPACITOR-FXD 22PF +-5% 200VDC CER0+-30	28480	0160-3875
A15C2	0160-3877		CAPACITOR-FXD 100PF +-20% 200VDC CER	28480	0160-3877
A15C3	0160-3875		CAPACITOR-FXD 22PF +-5% 200VDC CER0+-30	28480	0160-3875
A15C4	0180-0197		CAPACITOR-FXD 2.2UF+-10% 20VDC TA	0420J	150D225X9020A2
A15C5	0180-0197		CAPACITOR-FXD 2.2UF+-10% 20VDC TA	0420J	150D225X9020A2
A15CR1	1901-0050		DIODE-SWITCHING 80V 200MA 2NS DO-7	28480	1901-0050
A15CR2	1901-0050		DIODE-SWITCHING 80V 200MA 2NS DO-7	28480	1901-0050
A15CR3	1901-0050		DIODE-SWITCHING 80V 200MA 2NS DO-7	28480	1901-0050
A15CR4	1901-0050		DIODE-SWITCHING 80V 200MA 2NS DO-7	28480	1901-0050
A15CR5	1901-0050		DIODE-SWITCHING 80V 200MA 2NS DO-7	28480	1901-0050
A15CR6	1901-0050		DIODE-SWITCHING 80V 200MA 2NS DO-7	28480	1901-0050
A15CR7	1901-0050		DIODE-SWITCHING 80V 200MA 2NS DO-7	28480	1901-0050
A15CR8	1901-0050		DIODE-SWITCHING 80V 200MA 2NS DO-7	28480	1901-0050
A15CR9	1901-0050		DIODE-SWITCHING 80V 200MA 2NS DO-7	28480	1901-0050
A15CR10	1901-0050		DIODE-SWITCHING 80V 200MA 2NS DO-7	28480	1901-0050
A15CR11	1901-0050		DIODE-SWITCHING 80V 200MA 2NS DO-7	28480	1901-0050
A15CR12	1901-0050		DIODE-SWITCHING 80V 200MA 2NS DO-7	28480	1901-0050
A15CR13	1901-0050		DIODE-SWITCHING 80V 200MA 2NS DO-7	28480	1901-0050
A15CR14	1901-0050		DIODE-SWITCHING 80V 200MA 2NS DO-7	28480	1901-0050
A15CR15	1901-0050		DIODE-SWITCHING 80V 200MA 2NS DO-7	28480	1901-0050
A15CR16	1901-0050		DIODE-SWITCHING 80V 200MA 2NS DO-7	28480	1901-0050
A15CR17	1901-0050		DIODE-SWITCHING 80V 200MA 2NS DO-7	28480	1901-0050
A15CR18	1901-0050		DIODE-SWITCHING 80V 200MA 2NS DO-7	28480	1901-0050
A15L1	9140-0210		COIL-MLD 100UH 5% Q=50 .155Dx.375LG	02178	15-1315-12J
A15L2	9140-0210		COIL-MLD 100UH 5% Q=50 .155Dx.375LG	02178	15-1315-12J
A15MP1	1480-0073		PIN:DRIVE 0.250" LG	0000J	08D
A15MP2	1480-0073		PIN:DRIVE 0.250" LG	0000J	08D
A15MP3	4040-0748		EXTRACTOR-PC BOARD BLK POLYC	28480	4040-0748
A15MP4	4040-0752		EXTRACTOR-PC BOARD YEL POLYC	28480	4040-0752
A15Q1	1855-0020		TRANSISTOR J-FET N-CHAN D-MODE TO-18 SI	28480	1855-0020
A15Q2	1855-0020		TRANSISTOR J-FET N-CHAN D-MODE TO-18 SI	28480	1855-0020
A15Q3	1854-0404		TRANSISTOR NPN SI TO-18 PD=360MW	28480	1854-0404
A15Q4	1854-0404		TRANSISTOR NPN SI TO-18 PD=360MW	28480	1854-0404
A15Q5	1854-0404		TRANSISTOR NPN SI TO-18 PD=360MW	28480	1854-0404
A15Q6	1854-0404		TRANSISTOR NPN SI TO-18 PD=360MW	28480	1854-0404
A15Q7	1854-0557	2	TRANSISTOR NPN 2N2432A SI TO-18 PD=300MW	0169M	2N2432A
A15Q8	1855-0020		TRANSISTOR J-FET N-CHAN D-MODE TO-18 SI	28480	1855-0020
A15Q9	1855-0020		TRANSISTOR J-FET N-CHAN D-MODE TO-18 SI	28480	1855-0020
A15Q10	1855-0020		TRANSISTOR J-FET N-CHAN D-MODE TO-18 SI	28480	1855-0020
A15Q11	1854-0404		TRANSISTOR NPN SI TO-18 PD=360MW	28480	1854-0404
A15Q12	1854-0404		TRANSISTOR NPN SI TO-18 PD=360MW	28480	1854-0404
A15Q13	1854-0404		TRANSISTOR NPN SI TO-18 PD=360MW	28480	1854-0404
A15Q14	1854-0404		TRANSISTOR NPN SI TO-18 PD=360MW	28480	1854-0404
A15Q15	1854-0557		TRANSISTOR NPN 2N2432A SI TO-18 PD=300MW	0169M	2N2432A
A15Q16	1853-0007		TRANSISTOR PNP 2N3251 SI TO-18 PD=360MW	02030	2N3251
A15Q17	1854-0404		TRANSISTOR NPN SI TO-18 PD=360MW	28480	1854-0404
A15Q18	1854-0404		TRANSISTOR NPN SI TO-18 PD=360MW	28480	1854-0404
A15Q19	1854-0404		TRANSISTOR NPN SI TO-18 PD=360MW	28480	1854-0404
A15Q20	1854-0404		TRANSISTOR NPN SI TO-18 PD=360MW	28480	1854-0404

See introduction to this section for ordering information

Scans by ARTEK MEDIA =>

Table 6-2. Replaceable Parts

Reference Designation	HP Part Number	Qty	Description	Mfr Code	Mfr Part Number
A15Q21	1854-0404		TRANSISTOR NPN SI TO-18 PD=360MW	28480	1854-0404
A15Q22	1854-0404		TRANSISTOR NPN SI TO-18 PD=360MW	28480	1854-0404
A15Q23	1854-0404		TRANSISTOR NPN SI TO-18 PD=360MW	28480	1854-0404
A15Q24	1854-0404		TRANSISTOR NPN SI TO-18 PD=360MW	28480	1854-0404
A15Q25	1854-0404		TRANSISTOR NPN SI TO-18 PD=360MW	28480	1854-0404
A15Q26	1854-0404		TRANSISTOR NPN SI TO-18 PD=360MW	28480	1854-0404
A15Q27	1854-0404		TRANSISTOR NPN SI TO-18 PD=360MW	28480	1854-0404
A15R1	0698-6630	33	RESISTOR 20K ,1% ,125W F TC=0+-25	03298	NE55
A15R2	0757-0199		RESISTOR 21.5K 1% ,125W F TC=0+-100	03298	C4-1/8-T0-2152-F
A15R3	0757-0199		RESISTOR 21.5K 1% ,125W F TC=0+-100	03298	C4-1/8-T0-2152-F
A15R4	0698-3451	3	RESISTOR 133K 1% ,125W F TC=0+-100	03298	C4-1/8-T0-1333-F
A15R5	0698-6630		RESISTOR 20K ,1% ,125W F TC=0+-25	03298	NE55
A15R6	0757-0199		RESISTOR 21.5K 1% ,125W F TC=0+-100	03298	C4-1/8-T0-2152-F
A15R7	0757-0199		RESISTOR 21.5K 1% ,125W F TC=0+-100	03298	C4-1/8-T0-2152-F
A15R8	0698-8847	2	RESISTOR 66.5K ,25% ,125W F TC=0+-100	01070	H8
A15R9	0698-8861	2	RESISTOR 6.66K ,1% ,125W F TC=0+-25	01070	H8
A15R10	0757-0199		RESISTOR 21.5K 1% ,125W F TC=0+-100	03298	C4-1/8-T0-2152-F
A15R11	0757-0199		RESISTOR 21.5K 1% ,125W F TC=0+-100	03298	C4-1/8-T0-2152-F
A15R12	0757-0442		RESISTOR 10K 1% ,125W F TC=0+-100	03298	C4-1/8-T0-1002-F
A15R13	0757-0199		RESISTOR 21.5K 1% ,125W F TC=0+-100	03298	C4-1/8-T0-2152-F
A15R14	0757-0199		RESISTOR 21.5K 1% ,125W F TC=0+-100	03298	C4-1/8-T0-2152-F
A15R15	0757-0199		RESISTOR 21.5K 1% ,125W F TC=0+-100	03298	C4-1/8-T0-2152-F
A15R16	0698-8847		RESISTOR 66.5K ,25% ,125W F TC=0+-100	01070	H8
A15R17	0698-6630		RESISTOR 20K ,1% ,125W F TC=0+-25	03298	NE55
A15R18	0698-6353	2	RESISTOR 50K ,1% ,125W F TC=0+-25	05520	CMF-55-1, T-9
A15R19	0757-0465		RESISTOR 100K 1% ,125W F TC=0+-100	03298	C4-1/8-T0-1003-F
A15R20	0757-0199		RESISTOR 21.5K 1% ,125W F TC=0+-100	03298	C4-1/8-T0-2152-F
A15R21	0757-0199		RESISTOR 21.5K 1% ,125W F TC=0+-100	03298	C4-1/8-T0-2152-F
A15R22	0698-6630		RESISTOR 20K ,1% ,125W F TC=0+-25	03298	NE55
A15R23	0698-6624	1	RESISTOR 2K ,1% ,125W F TC=0+-25	03298	NE55
A15R24	0757-0442		RESISTOR 10K 1% ,125W F TC=0+-100	03298	C4-1/8-T0-1002-F
A15R25	0757-0465		RESISTOR 100K 1% ,125W F TC=0+-100	03298	C4-1/8-T0-1003-F
A15R26	0757-0199		RESISTOR 21.5K 1% ,125W F TC=0+-100	03298	C4-1/8-T0-2152-F
A15R27	0757-0199		RESISTOR 21.5K 1% ,125W F TC=0+-100	03298	C4-1/8-T0-2152-F
A15R28	0698-6630		RESISTOR 20K ,1% ,125W F TC=0+-25	03298	NE55
A15R29	0698-6630		RESISTOR 20K ,1% ,125W F TC=0+-25	03298	NE55
A15R30	0757-0465		RESISTOR 100K 1% ,125W F TC=0+-100	03298	C4-1/8-T0-1003-F
A15R31	0757-0199		RESISTOR 21.5K 1% ,125W F TC=0+-100	03298	C4-1/8-T0-2152-F
A15R32	0757-0199		RESISTOR 21.5K 1% ,125W F TC=0+-100	03298	C4-1/8-T0-2152-F
A15R33	0757-0199		RESISTOR 21.5K 1% ,125W F TC=0+-100	03298	C4-1/8-T0-2152-F
A15R34	0757-0199		RESISTOR 21.5K 1% ,125W F TC=0+-100	03298	C4-1/8-T0-2152-F
A15R35	0757-0458		RESISTOR 51.1K 1% ,125W F TC=0+-100	03298	C4-1/8-T0-5112-F
A15R36	0757-0465		RESISTOR 100K 1% ,125W F TC=0+-100	03298	C4-1/8-T0-1003-F
A15R37	0757-0199		RESISTOR 21.5K 1% ,125W F TC=0+-100	03298	C4-1/8-T0-2152-F
A15R38	0698-8852	1	RESISTOR 28.6K ,25% ,125W F TC=0+-100	01070	H8
A15R39	0698-6630		RESISTOR 20K ,1% ,125W F TC=0+-25	03298	NE55
A15R40	0698-6377	1	RESISTOR 200 ,1% ,125W F TC=0+-25	03298	NE55
A15R41	0757-0442		RESISTOR 10K 1% ,125W F TC=0+-100	03298	C4-1/8-T0-1002-F
A15R42	0757-0465		RESISTOR 100K 1% ,125W F TC=0+-100	03298	C4-1/8-T0-1003-F
A15R43	0757-0199		RESISTOR 21.5K 1% ,125W F TC=0+-100	03298	C4-1/8-T0-2152-F
A15R44	0757-0199		RESISTOR 21.5K 1% ,125W F TC=0+-100	03298	C4-1/8-T0-2152-F
A15R45	0698-6630		RESISTOR 20K ,1% ,125W F TC=0+-25	03298	NE55
A15R46	0698-6630		RESISTOR 20K ,1% ,125W F TC=0+-25	03298	NE55
A15R47	0757-0465		RESISTOR 100K 1% ,125W F TC=0+-100	03298	C4-1/8-T0-1003-F
A15R48	0757-0199		RESISTOR 21.5K 1% ,125W F TC=0+-100	03298	C4-1/8-T0-2152-F
A15R49	0757-0199		RESISTOR 21.5K 1% ,125W F TC=0+-100	03298	C4-1/8-T0-2152-F
A15R50	0757-0199		RESISTOR 21.5K 1% ,125W F TC=0+-100	03298	C4-1/8-T0-2152-F
A15R51	0757-0199		RESISTOR 21.5K 1% ,125W F TC=0+-100	03298	C4-1/8-T0-2152-F
A15R52	0698-3194	4	RESISTOR 20K ,25% ,125W F TC=0+-50	03888	PME55-1/8-T2-2002-C
A15R53	2100-1972		RESISTOR-TRMR 20K 10% WW SIDE-ADJ 20-TRN	03740	3005P-1-203
A15R54	0757-0442		RESISTOR 10K 1% ,125W F TC=0+-100	03298	C4-1/8-T0-1002-F
A15R55	0757-0442		RESISTOR 10K 1% ,125W F TC=0+-100	03298	C4-1/8-T0-1002-F
A15R56	0757-0199		RESISTOR 21.5K 1% ,125W F TC=0+-100	03298	C4-1/8-T0-2152-F
A15R57	0757-0458		RESISTOR 51.1K 1% ,125W F TC=0+-100	03298	C4-1/8-T0-5112-F
A15R58	0757-0199		RESISTOR 21.5K 1% ,125W F TC=0+-100	03298	C4-1/8-T0-2152-F
A15R59	0757-0199		RESISTOR 21.5K 1% ,125W F TC=0+-100	03298	C4-1/8-T0-2152-F
A15R60	0757-0199		RESISTOR 21.5K 1% ,125W F TC=0+-100	03298	C4-1/8-T0-2152-F
A15R61	0757-0199		RESISTOR 21.5K 1% ,125W F TC=0+-100	03298	C4-1/8-T0-2152-F
A15R62	0698-3194		RESISTOR 20K ,25% ,125W F TC=0+-50	03888	PME55-1/8-T2-2002-C
A15R63	0757-0199		RESISTOR 21.5K 1% ,125W F TC=0+-100	03298	C4-1/8-T0-2152-F
A15U1	1826-0261		IC 741 OP AMP	28480	1826-0261
A15U2	1826-0261		IC 741 OP AMP	28480	1826-0261
A15U3	1826-0261		IC 741 OP AMP	28480	1826-0261
A15U4	1826-0261		IC 741 OP AMP	28480	1826-0261
A15U5	1826-0261		IC 741 OP AMP	28480	1826-0261

See introduction to this section for ordering information

Scans by ARTEK MEDIA =>

Table 6-2. Replaceable Parts

Reference Designation	HP Part Number	Qty	Description	Mfr Code	Mfr Part Number
A15VR1	1902-3104	5	DIODE-ZNR 5.62V 5% DO-7 PD=.4W TC=+.016%	02030	BZ 10939-110
A15VR2	1902-3104		DIODE-ZNR 5.62V 5% DO-7 PD=.4W TC=+.016%	02030	BZ 10939-110
A15VR3	1902-3104		DIODE-ZNR 5.62V 5% DO-7 PD=.4W TC=+.016%	02030	BZ 10939-110
A15VR4	1902-3059	1	DIODE-ZNR 3.83V 5% DO-7 PD=.4W TC=-.051%	02030	BZ 10939-62
A16	08565-60019	1	ASSEMBLY, SWEEP GENERATOR	28480	08565-60019
A16C1	0180-0197		CAPACITOR-FXD 2.2UF+-10% 20VDC TA	0420J	150D225X9020A2
A16C2	0160-3456		CAPACITOR-FXD 1000PF +-10% 1KVDC CER	28480	0160-3456
A16C3	0160-3456		CAPACITOR-FXD 1000PF +-10% 1KVDC CER	28480	0160-3456
A16C4	0160-2257	5	CAPACITOR-FXD 10PF +-5% 500VDC CER0+-60	28480	0160-2257
A16C5	0160-3466		CAPACITOR-FXD 100PF +-10% 1KVDC CER	28480	0160-3466
A16C6	0160-2150	2	CAPACITOR-FXD 33PF +-5% 300VDC	28480	0160-2150
A16C7	0160-3466		CAPACITOR-FXD 100PF +-10% 1KVDC CER	28480	0160-3466
A16C8	0180-0197		CAPACITOR-FXD 2.2UF+-10% 20VDC TA	0420J	150D225X9020A2
A16C9	0160-2307		CAPACITOR-FXD 47PF +-5% 300VDC	28480	0160-2307
A16C10	0160-3456		CAPACITOR-FXD 1000PF +-10% 1KVDC CER	28480	0160-3456
A16C11	0180-1735	1	CAPACITOR-FXD .22UF+-10% 35VDC TA	0420J	150D224X9035A2
A16C12	0160-3009	1	CAPACITOR-FXD 982PF +-1% 100VDC MICA0+70	28480	0160-3009
A16C13	0160-3402	1	CAPACITOR-FXD 1UF +-5% 50VDC MET-POLYC	28480	0160-3402
A16C14	0180-0197		CAPACITOR-FXD 2.2UF+-10% 20VDC TA	0420J	150D225X9020A2
A16C15	0160-0166		CAPACITOR-FXD .068UF +-10% 200VDC POLYE	0420J	292P68392
A16C16	0160-2055		CAPACITOR-FXD .01UF +80-20% 100VDC CER	28480	0160-2055
A16C17	0160-4084		CAPACITOR-FXD .1UF +-20% 50VDC CER	28480	0160-4084
A16C18	0160-2055		CAPACITOR-FXD .01UF +80-20% 100VDC CER	28480	0160-2055
A16C19	0160-2055		CAPACITOR-FXD .01UF +80-20% 100VDC CER	28480	0160-2055
A16C20	0160-3466		CAPACITOR-FXD 100PF +-10% 1KVDC CER	28480	0160-3466
A16C21	0160-4084		CAPACITOR-FXD .1UF +-20% 50VDC CER	28480	0160-4084
A16C22	0160-4084		CAPACITOR-FXD .1UF +-20% 50VDC CER	28480	0160-4084
A16C23	0160-3456		CAPACITOR-FXD 1000PF +-10% 1KVDC CER	28480	0160-3456
A16C24	0180-0197		CAPACITOR-FXD 2.2UF+-10% 20VDC TA	0420J	150D225X9020A2
A16C25	0180-0197		CAPACITOR-FXD 2.2UF+-10% 20VDC TA	0420J	150D225X9020A2
A16C26	0180-0197		CAPACITOR-FXD 2.2UF+-10% 20VDC TA	0420J	150D225X9020A2
A16CR1	1901-0050		DIODE-SWITCHING 80V 200MA 2NS DO-7	28480	1901-0050
A16CR2	1901-0050		DIODE-SWITCHING 80V 200MA 2NS DO-7	28480	1901-0050
A16CR3	1901-0376		DIODE-GEN PRP 35V 50MA DO-7	28480	1901-0376
A16CR4	1901-0050		DIODE-SWITCHING 80V 200MA 2NS DO-7	28480	1901-0050
A16CR5	1901-0050		DIODE-SWITCHING 80V 200MA 2NS DO-7	28480	1901-0050
A16CR6	1901-0050		DIODE-SWITCHING 80V 200MA 2NS DO-7	28480	1901-0050
A16CR7	1901-0050		DIODE-SWITCHING 80V 200MA 2NS DO-7	28480	1901-0050
A16CR8	1901-0050		DIODE-SWITCHING 80V 200MA 2NS DO-7	28480	1901-0050
A16CR9	1901-0050		DIODE-SWITCHING 80V 200MA 2NS DO-7	28480	1901-0050
A16CR10	1901-0050		DIODE-SWITCHING 80V 200MA 2NS DO-7	28480	1901-0050
A16CR11	1901-0050		DIODE-SWITCHING 80V 200MA 2NS DO-7	28480	1901-0050
A16CR12	1901-0050		DIODE-SWITCHING 80V 200MA 2NS DO-7	28480	1901-0050
A16CR13	1901-0050		DIODE-SWITCHING 80V 200MA 2NS DO-7	28480	1901-0050
A16CR14	1901-0050		DIODE-SWITCHING 80V 200MA 2NS DO-7	28480	1901-0050
A16CR15	1901-0050		DIODE-SWITCHING 80V 200MA 2NS DO-7	28480	1901-0050
A16CR16	1901-0050		DIODE-SWITCHING 80V 200MA 2NS DO-7	28480	1901-0050
A16CR17	1901-0050		DIODE-SWITCHING 80V 200MA 2NS DO-7	28480	1901-0050
A16CR18	1901-0050		DIODE-SWITCHING 80V 200MA 2NS DO-7	28480	1901-0050
A16CR19	1901-0050		DIODE-SWITCHING 80V 200MA 2NS DO-7	28480	1901-0050
A16CR20	1901-0050		DIODE-SWITCHING 80V 200MA 2NS DO-7	28480	1901-0050
A16CR21	1901-0050		DIODE-SWITCHING 80V 200MA 2NS DO-7	28480	1901-0050
A16CR22	1901-0050		DIODE-SWITCHING 80V 200MA 2NS DO-7	28480	1901-0050
A16CR23	1901-0050		DIODE-SWITCHING 80V 200MA 2NS DO-7	28480	1901-0050
A16CR24	1901-0050		DIODE-SWITCHING 80V 200MA 2NS DO-7	28480	1901-0050
A16CR25	1901-0050		DIODE-SWITCHING 80V 200MA 2NS DO-7	28480	1901-0050
A16CR26	1901-0050		DIODE-SWITCHING 80V 200MA 2NS DO-7	28480	1901-0050
A16CR27	1901-0050		DIODE-SWITCHING 80V 200MA 2NS DO-7	28480	1901-0050
A16CR28	1901-0050		DIODE-SWITCHING 80V 200MA 2NS DO-7	28480	1901-0050
A16CR29	1901-0050		DIODE-SWITCHING 80V 200MA 2NS DO-7	28480	1901-0050
A16CR30	1901-0050		DIODE-SWITCHING 80V 200MA 2NS DO-7	28480	1901-0050
A16L1	9140-0210		COIL-MLD 100UH 5% Q=50 .155DX.375LG	02178	15-1315-12J
A16L2	9140-0210		COIL-MLD 100UH 5% Q=50 .155DX.375LG	02178	15-1315-12J
A16L3	9140-0210		COIL-MLD 100UH 5% Q=50 .155DX.375LG	02178	15-1315-12J
A16MP1	1205-0202	1	THERMAL LINK DUAL TO-18-PKG	28480	1205-0202
A16MP2	1480-0073		PIN:DRIVE 0.250" LG	0000J	080
A16MP3	1480-0073		PIN:DRIVE 0.250" LG	0000J	080
A16MP4	4040-0753	1	EXTRACTOR-PC BOARD GRN POLYC	28480	4040-0753
A16MP5	4040-0748		EXTRACTOR-PC BOARD BLK POLYC	28480	4040-0748
A16Q1	1854-0404		TRANSISTOR NPN SI TO-18 PD=360MW	28480	1854-0404
A16Q2	1855-0417	1	TRANSISTOR J-FET N-CHAN D-MODE TO-18 SI	28480	1855-0417
A16Q3	1854-0404		TRANSISTOR NPN SI TO-18 PD=360MW	28480	1854-0404
A16Q4	1854-0404		TRANSISTOR NPN SI TO-18 PD=360MW	28480	1854-0404
A16Q5	1854-0404		TRANSISTOR NPN SI TO-18 PD=360MW	28480	1854-0404

See introduction to this section for ordering information

Scans by ARTEK MEDIA =>

Table 6-2. Replaceable Parts

Reference Designation	HP Part Number	Qty	Description	Mfr Code	Mfr Part Number
A16Q6	1853-0281		TRANSISTOR PNP 2N2907A SI TO-18 PD=400MW	0203G	2N2907A
A16Q7	1854-0404		TRANSISTOR NPN SI TO-18 PD=360MW	28480	1854-0404
A16Q8	1855-0020		TRANSISTOR J-FET N-CHAN D-MODE TO-18 SI	28480	1855-0020
A16Q9	1853-0281		TRANSISTOR PNP 2N2907A SI TO-18 PD=400MW	0203G	2N2907A
A16Q10	1854-0404		TRANSISTOR NPN SI TO-18 PD=360MW	28480	1854-0404
A16Q11	1853-0316	1	TRANSISTOR-DUAL PNP PD=500MW	28480	1853-0316
A16Q12	1855-0082	5	TRANSISTOR MOSFET P-CHAN D-MODE SI	28480	1855-0082
A16Q13	1854-0404		TRANSISTOR NPN SI TO-18 PD=360MW	28480	1854-0404
A16Q14	1854-0404		TRANSISTOR NPN SI TO-18 PD=360MW	28480	1854-0404
A16Q15	1854-0404		TRANSISTOR NPN SI TO-18 PD=360MW	28480	1854-0404
A16Q16	1855-0082		TRANSISTOR MOSFET P-CHAN D-MODE SI	28480	1855-0082
A16Q17	1854-0404		TRANSISTOR NPN SI TO-18 PD=360MW	28480	1854-0404
A16Q18	1854-0404		TRANSISTOR NPN SI TO-18 PD=360MW	28480	1854-0404
A16Q19	1853-0281		TRANSISTOR PNP 2N2907A SI TO-18 PD=400MW	0203G	2N2907A
A16Q20	1854-0404		TRANSISTOR NPN SI TO-18 PD=360MW	28480	1854-0404
A16Q21	1854-0404		TRANSISTOR NPN SI TO-18 PD=360MW	28480	1854-0404
A16Q22	1854-0404		TRANSISTOR NPN SI TO-18 PD=360MW	28480	1854-0404
A16Q23	1854-0404		TRANSISTOR NPN SI TO-18 PD=360MW	28480	1854-0404
A16Q24	1854-0404		TRANSISTOR NPN SI TO-18 PD=360MW	28480	1854-0404
A16Q25	1854-0404		TRANSISTOR NPN SI TO-18 PD=360MW	28480	1854-0404
A16Q26	1854-0404		TRANSISTOR NPN SI TO-18 PD=360MW	28480	1854-0404
A16Q27	1854-0404		TRANSISTOR NPN SI TO-18 PD=360MW	28480	1854-0404
A16Q28	1854-0404		TRANSISTOR NPN SI TO-18 PD=360MW	28480	1854-0404
A16Q29	1854-0404		TRANSISTOR NPN SI TO-18 PD=360MW	28480	1854-0404
A16Q30	1854-0404		TRANSISTOR NPN SI TO-18 PD=360MW	28480	1854-0404
A16Q31	1854-0404		TRANSISTOR NPN SI TO-18 PD=360MW	28480	1854-0404
A16Q32	1854-0404		TRANSISTOR NPN SI TO-18 PD=360MW	28480	1854-0404
A16R1	0698-3451		RESISTOR 133K 1% .125W F TC=0+-100	0329B	C4-1/8-T0-1333-F
A16R2	0698-8848	1	RESISTOR 57.2K .25% .125W F TC=0+-100	0107D	H8
A16R3	0698-7421	3	RESISTOR 40K .25% .125W F TC=0+-100	0299E	MF4C1/8-T0-4002-C
A16R4	0698-3194		RESISTOR 20K .25% .125W F TC=0+-50	03888	PME55-1/8-T2-2002-C
A16R5	0698-7797	1	RESISTOR 7.68K .25% .125W F TC=0+-100	0299E	MF4C1/8-T0-7681-C
A16R6	0757-0442		RESISTOR 10K 1% .125W F TC=0+-100	0329B	C4-1/8-T0-1002-F
A16R7	0757-0442		RESISTOR 10K 1% .125W F TC=0+-100	0329B	C4-1/8-T0-1002-F
A16R8	0698-3450		RESISTOR 42.2K 1% .125W F TC=0+-100	0329B	C4-1/8-T0-4222-F
A16R9	2100-2852	1	RESISTOR-TRMR 1K 10% WW SIDE-ADJ 20-TRN	0374D	3005P-1-102
A16R10	0757-0279		RESISTOR 3.16K 1% .125W F TC=0+-100	0329B	C4-1/8-T0-3161-F
A16R11	0757-0459		RESISTOR 56.2K 1% .125W F TC=0+-100	0329B	C4-1/8-T0-5622-F
A16R12	0698-3152		RESISTOR 3.48K 1% .125W F TC=0+-100	0329B	C4-1/8-T0-3481-F
A16R13	0757-0442		RESISTOR 10K 1% .125W F TC=0+-100	0329B	C4-1/8-T0-1002-F
A16R14	0757-0289	15	RESISTOR 13.3K 1% .125W F TC=0+-100	0299E	MF4C1/8-T0-1332-F
A16R15	2100-2851	4	RESISTOR-TRMR 2K 10% WW SIDE-ADJ 20-TRN	0374D	3005P-1-202
A16R16	0698-3457		RESISTOR 316K 1% .125W F TC=0+-100	0160G	CC
A16R17	0698-3446		RESISTOR 383 1% .125W F TC=0+-100	0329B	C4-1/8-T0-3830-F
A16R18	0698-3442	6	RESISTOR 237 1% .125W F TC=0+-100	0329B	C4-1/8-T0-2370-F
A16R19	2100-1702	1	RESISTOR-TRMR 100 10% WW SIDE-ADJ 20-TRN	0374D	3005P-1-101
A16R20	0698-3156		RESISTOR 14.7K 1% .125W F TC=0+-100	0329B	C4-1/8-T0-1472-F
A16R21	0698-4482	2	RESISTOR 17.4K 1% .125W F TC=0+-100	0329B	C4-1/8-T0-1742-F
A16R22	0757-0465		RESISTOR 100K 1% .125W F TC=0+-100	0329B	C4-1/8-T0-1003-F
A16R23	0757-0280		RESISTOR 1K 1% .125W F TC=0+-100	0329B	C4-1/8-T0-1001-F
A16R24	0698-3156		RESISTOR 14.7K 1% .125W F TC=0+-100	0329B	C4-1/8-T0-1472-F
A16R25	2100-2851		RESISTOR-TRMR 2K 10% WW SIDE-ADJ 20-TRN	0374D	3005P-1-202
A16R26	0757-0465		RESISTOR 100K 1% .125W F TC=0+-100	0329B	C4-1/8-T0-1003-F
A16R27	0757-0401		RESISTOR 100 1% .125W F TC=0+-100	0329B	C4-1/8-T0-101-F
A16R28	0757-0465		RESISTOR 100K 1% .125W F TC=0+-100	0329B	C4-1/8-T0-1003-F
A16R29	0757-0123		RESISTOR 34.8K 1% .125W F TC=0+-100	0160G	CC
A16R30	0757-0443	7	RESISTOR 11K 1% .125W F TC=0+-100	0329B	C4-1/8-T0-1102-F
A16R31	0757-0438		RESISTOR 5.11K 1% .125W F TC=0+-100	0329B	C4-1/8-T0-5111-F
A16R32	0698-0083		RESISTOR 1.96K 1% .125W F TC=0+-100	0329B	C4-1/8-T0-1961-F
A16R33	0757-0465		RESISTOR 100K 1% .125W F TC=0+-100	0329B	C4-1/8-T0-1003-F
A16R34	0698-3160		RESISTOR 31.6K 1% .125W F TC=0+-100	0329B	C4-1/8-T0-3162-F
A16R35	0757-0465		RESISTOR 100K 1% .125W F TC=0+-100	0329B	C4-1/8-T0-1003-F
A16R36	0757-0465		RESISTOR 100K 1% .125W F TC=0+-100	0329B	C4-1/8-T0-1003-F
A16R37	0757-0465		RESISTOR 100K 1% .125W F TC=0+-100	0329B	C4-1/8-T0-1003-F
A16R38	0698-3160		RESISTOR 31.6K 1% .125W F TC=0+-100	0329B	C4-1/8-T0-3162-F
A16R39	0698-3160		RESISTOR 31.6K 1% .125W F TC=0+-100	0329B	C4-1/8-T0-3162-F
A16R40	0757-0465		RESISTOR 100K 1% .125W F TC=0+-100	0329B	C4-1/8-T0-1003-F
A16R41	0757-0465		RESISTOR 100K 1% .125W F TC=0+-100	0329B	C4-1/8-T0-1003-F
A16R42			NOT ASSIGNED		
A16R43	0698-7288	10	RESISTOR 147K 1% .05W F TC=0+-100	0329B	C3-1/8-T0-1473-G
A16R44	0698-7288		RESISTOR 147K 1% .05W F TC=0+-100	0329B	C3-1/8-T0-1473-G
A16R45	0698-7288		RESISTOR 147K 1% .05W F TC=0+-100	0329B	C3-1/8-T0-1473-G
A16R46	0698-7288		RESISTOR 147K 1% .05W F TC=0+-100	0329B	C3-1/8-T0-1473-G
A16R47	0757-0461		RESISTOR 68.1K 1% .125W F TC=0+-100	0329B	C4-1/8-T0-6812-F
A16R48	0698-7288		RESISTOR 147K 1% .05W F TC=0+-100	0329B	C3-1/8-T0-1473-G
A16R49	0698-7288		RESISTOR 147K 1% .05W F TC=0+-100	0329B	C3-1/8-T0-1473-G
A16R50	0698-7288		RESISTOR 147K 1% .05W F TC=0+-100	0329B	C3-1/8-T0-1473-G

See introduction to this section for ordering information

Scans by ARTEK MEDIA =>

Table 6-2. Replaceable Parts

Reference Designation	HP Part Number	Qty	Description	Mfr Code	Mfr Part Number
A16R51	0698-7288		RESISTOR 147K 1% .05W F TC=0+-100	03298	C3-1/8-T0-1473-G
A16R52	0698-7288		RESISTOR 147K 1% .05W F TC=0+-100	03298	C3-1/8-T0-1473-G
A16R53	0757-0461		RESISTOR 68.1K 1% .125W F TC=0+-100	03298	C4-1/8-T0-6812-F
A16R54	0698-7288		RESISTOR 147K 1% .05W F TC=0+-100	03298	C3-1/8-T0-1473-G
A16R55	0757-0461		RESISTOR 68.1K 1% .125W F TC=0+-100	03298	C4-1/8-T0-6812-F
A16R56	0698-0084		RESISTOR 2.15K 1% .125W F TC=0+-100	03298	C4-1/8-T0-2151-F
A16R57	0757-0280		RESISTOR 1K 1% .125W F TC=0+-100	03298	C4-1/8-T0-1001-F
A16R58	0698-3444		RESISTOR 316 1% .125W F TC=0+-100	03298	C4-1/8-T0-316R-F
A16R59	0698-6360	6	RESISTOR 10K .1% .125W F TC=0+-25	03298	NE55
A16R60	0698-8849	1		28480	0698-8849
A16R61	0698-6360		RESISTOR 10K .1% .125W F TC=0+-25	03298	NE55
A16R62	0757-0346		RESISTOR 10 1% .125W F TC=0+-100	03298	C4-1/8-T0-10R0-F
A16R63	0683-3355	2	RESISTOR 3.3M 5% .25W FC TC=-900/+1100	01606	CB3355
A16R64	0683-3355		RESISTOR 3.3M 5% .25W FC TC=-900/+1100	01606	CB3355
A16R65	0698-6360		RESISTOR 10K .1% .125W F TC=0+-25	03298	NE55
A16R66	0698-8862	1	RESISTOR 5.8W .1% .125W F TC=0+-25	01070	H8
A16R67	0757-0442		RESISTOR 10K 1% .125W F TC=0+-100	03298	C4-1/8-T0-1002-F
A16R68	0698-3160		RESISTOR 31.6K 1% .125W F TC=0+-100	03298	C4-1/8-T0-3162-F
A16R69	0698-3457		RESISTOR 316K 1% .125W F TC=0+-100	01606	CC
A16R70	0698-3160		RESISTOR 31.6K 1% .125W F TC=0+-100	03298	C4-1/8-T0-3162-F
A16R71	0757-0442		RESISTOR 10K 1% .125W F TC=0+-100	03298	C4-1/8-T0-1002-F
A16R72	0698-3457		RESISTOR 316K 1% .125W F TC=0+-100	01606	CC
A16R73	0683-6845	1	RESISTOR 680K 5% .25W FC TC=-800/+900	01606	CB6845
A16R74	2100-1973	1	RESISTOR-TRMR 200 10% AW TOP-ADJ 20-TRN	03740	3005P-1-201
A16R75	0757-0401		RESISTOR 100 1% .125W F TC=0+-100	03298	C4-1/8-T0-101-F
A16R76	0698-3160		RESISTOR 31.6K 1% .125W F TC=0+-100	03298	C4-1/8-T0-3162-F
A16R77	0757-0442		RESISTOR 10K 1% .125W F TC=0+-100	03298	C4-1/8-T0-1002-F
A16R78	0757-0465		RESISTOR 100K 1% .125W F TC=0+-100	03298	C4-1/8-T0-1003-F
A16R79	0757-0465		RESISTOR 100K 1% .125W F TC=0+-100	03298	C4-1/8-T0-1003-F
A16R80			NOT ASSIGNED		
A16R81	0698-3260		RESISTOR 464K 1% .125W F TC=0+-100	01606	CC
A16R82	0698-3160		RESISTOR 31.6K 1% .125W F TC=0+-100	03298	C4-1/8-T0-3162-F
A16R83	0757-0279		RESISTOR 3.16K 1% .125W F TC=0+-100	03298	C4-1/8-T0-3161-F
A16R84	0757-0465		RESISTOR 100K 1% .125W F TC=0+-100	03298	C4-1/8-T0-1003-F
A16R85	0698-3160		RESISTOR 31.6K 1% .125W F TC=0+-100	03298	C4-1/8-T0-3162-F
A16R86	0757-0279		RESISTOR 3.16K 1% .125W F TC=0+-100	03298	C4-1/8-T0-3161-F
A16R87	0757-0465		RESISTOR 100K 1% .125W F TC=0+-100	03298	C4-1/8-T0-1003-F
A16R88	0757-0439		RESISTOR 6.81K 1% .125W F TC=0+-100	03298	C4-1/8-T0-6811-F
A16R89	0698-3159		RESISTOR 26.1K 1% .125W F TC=0+-100	03298	C4-1/8-T0-2612-F
A16R90	0698-3450		RESISTOR 42.2K 1% .125W F TC=0+-100	03298	C4-1/8-T0-4222-F
A16R91	0757-0465		RESISTOR 100K 1% .125W F TC=0+-100	03298	C4-1/8-T0-1003-F
A16R92	0757-0346		RESISTOR 10 1% .125W F TC=0+-100	03298	C4-1/8-T0-10R0-F
A16R93 THRU R95			NOT ASSIGNED		
A16R96	0757-0289		RESISTOR 13.3K 1% .125W F TC=0+-100	0299E	MF4C1/8-T0-1332-F
A16R97	0757-0458		RESISTOR 51.1K 1% .125W F TC=0+-100	03298	C4-1/8-T0-5112-F
A16R98	0757-0465		RESISTOR 100K 1% .125W F TC=0+-100	03298	C4/1/8-T0-1003-F
A16R99	0757-0465		RESISTOR 100K 1% .125W F TC=0+-100	03298	C4-1/8-T0-1003-F
A16R100	0757-0442		RESISTOR 10K 1% .125W F TC=0+-100	03298	C4-1/8-T0-1002-F
A16R101	0698-6630		RESISTOR 20K .1% .125W F TC=0+-25	03298	NE55
A16R102	0757-0199		RESISTOR 21.5K 1% .125W F TC=0+-100	03298	C4-1/8-T0-2152-F
A16R103	0757-0199		RESISTOR 21.5K 1% .125W F TC=0+-100	03298	C4-1/8-T0-2152-F
A16R104	0698-6630		RESISTOR 20K .1% .125W F TC=0+-25	03298	NE55
A16R105	0757-0199		RESISTOR 21.5K 1% .125W F TC=0+-100	03298	C4-1/8-T0-2152-F
A16R106	0757-0199		RESISTOR 21.5K 1% .125W F TC=0+-100	03298	C4-1/8-T0-2152-F
A16R107	0698-6360		RESISTOR 10K .1% .125W F TC=0+-25	03298	NE55
A16R108	0757-0199		RESISTOR 21.5K 1% .125W F TC=0+-100	03298	C4-1/8-T0-2152-F
A16R109	0757-0199		RESISTOR 21.5K 1% .125W F TC=0+-100	03298	C4-1/8-T0-2152-F
A16R110	0698-8861		RESISTOR 6.66K .1% .125W F TC=0+-25	01070	H8
A16R111	0757-0199		RESISTOR 21.5K 1% .125W F TC=0+-100	03298	C4-1/8-T0-2152-F
A16R112	0757-0199		RESISTOR 21.5K 1% .125W F TC=0+-100	03298	C4-1/8-T0-2152-F
A16R113	0698-3237	3	RESISTOR 5K .25% .125W F TC=0+-50	03298	NC55
A16R114	0757-0199		RESISTOR 21.5K 1% .125W F TC=0+-100	03298	C4-1/8-T0-2152-F
A16R115	0757-0199		RESISTOR 21.5K 1% .125W F TC=0+-100	03298	C4-1/8-T0-2152-F
A16R116	0698-8172	1	RESISTOR 4K .25% .125W F TC=0+-50	0299F	MF4C1/8-T2-4001-C
A16R117	0757-0199		RESISTOR 21.5K 1% .125W F TC=0+-100	03298	C4-1/8-T0-2152-F
A16R118	0757-0199		RESISTOR 21.5K 1% .125W F TC=0+-100	03298	C4-1/8-T0-2152-F
A16R119	0698-8868	1	RESISTOR 2.215K .25% .125W F TC=0+-100	01070	H8
A164120			NOT ASSIGNED		
A16R121	0698-3156		RESISTOR 14.7K 1% .125W F TC=0+-100	03298	C4-1/8-T0-1472-F
A16R122	0757-0280		RESISTOR 1K 1% .125W F TC=0+-100	03298	C4-1/8-T0-1001-F
A16R123	0698-3260		RESISTOR 464K 1% .125W F TC=0+-100	01606	CC
A16R124	0757-0280		RESISTOR 1K 1% .125W F TC=0+-100	03298	C4-1/8-T0-1001-F
A16R125	0757-0280		RESISTOR 1K 1% .125W F TC=0+-100	03298	C4-1/8-T0-1001-F
A16R126	0757-0442		RESISTOR 10K 1% .125W F TC=0+-100	03298	C4-1/8-T0-1002-F
A16R127	0698-3167	2	RESISTOR 25K 1% .125W F TC=0+-100	03298	C4-1/8-T0-2502-F
A16R128	0757-0462	3	RESISTOR 75K 1% .125W F TC=0+-100	03298	C4-1/8-T0-7502-F
A16R129	0757-0462		RESISTOR 75K 1% .125W F TC=0+-100	03298	C4-1/8-T0-7502-F

See introduction to this section for ordering information

Scans by ARTEK MEDIA =>

Table 6-2. Replaceable Parts

Reference Designation	HP Part Number	Qty	Description	Mfr Code	Mfr Part Number
A16R130	0698-3167		RESISTOR 25K 1% .125W F TC=0+-100	03298	C4-1/8-T0-2502-F
A16U1	1826-0261		IC 741 OP AMP	28480	1826-0261
A16U2	1826-0092		IC OP AMP	28480	1826-0092
A16U3	1820-0223		IC 301 OP AMP	03790	LM301A
A16U4	1826-0026	1	IC COMPARATOR	0340F	LM311H
A16U5	1820-1550	2	IC GATE CMOS OR QUAD 2-INP	0203G	MC14071BCL
A16U6	1820-1551	2	IC GATE CMOS AND QUAD 2-INP	0203G	MC14081BCL
A16U7	1820-1551		IC GATE CMOS AND QUAD 2-INP	0203G	MC14081BCL
A16U8	1820-1592	3	IC INV CMOS HEX 1-INP	0203G	MC14069BCL
A16U9	1826-0092		IC OP AMP	28480	1826-0092
A16U10	1810-0208		NETWORK-RES 8-PIN-SIP .1-PIN-SPCG	0248C	750-81-R68K
A16VR1	1902-0025		DIODE-ZNR 10V 5% DO-7 PD=.4W TC=+.06%	0223G	FZ7260
A16VR2	1902-0041		DIODE-ZNR 5.11V 5% DO-7 PD=.4W TC=-.009%	0203G	BZ 10939-98
A16VR3	1902-0025		DIODE-ZNR 10V 5% DO-7 PD=.4W TC=+.06%	0223G	FZ7260
A16VR4	1902-3171	9	DIODE-ZNR 11V 5% DO-7 PD=.4W TC=+.062%	0223G	FZ7264
A16VR5	1902-3171		DIODE-ZNR 11V 5% DO-7 PD=.4W TC=+.062%	0223G	FZ7264
A16VR6	1902-3171		DIODE-ZNR 11V 5% DO-7 PD=.4W TC=+.062%	0223G	FZ7264
A16VR7	1902-3171		DIODE-ZNR 11V 5% DO-7 PD=.4W TC=+.062%	0223G	FZ7264
A16VR8	1902-3171		DIODE-ZNR 11V 5% DO-7 PD=.4W TC=+.062%	0223G	FZ7264
A16VR9	1902-3171		DIODE-ZNR 11V 5% DO-7 PD=.4W TC=+.062%	0223G	FZ7264
A17	08565-60020	1	ASSEMBLY, FREQUENCY CONTROL	28480	08565-60020
A17C1	0180-0229		CAPACITOR-FXD 33UF+-10% 10VDC TA	0420J	150D336X9010B2
A17C2	0160-3877		CAPACITOR-FXD 100PF +-20% 200VDC CER	28480	0160-3877
A17C3	0160-3877		CAPACITOR-FXD 100PF +-20% 200VDC CER	28480	0160-3877
A17C4	0160-3877		CAPACITOR-FXD 100PF +-20% 200VDC CER	28480	0160-3877
A17C5	0180-0116	3	CAPACITOR-FXD 6.8UF+-10% 35VDC TA	0420J	150D685X9035B2
A17C6	0160-3877		CAPACITOR-FXD 100PF +-20% 200VDC CER	28480	0160-3877
A17C7	0160-3877		CAPACITOR-FXD 100PF +-20% 200VDC CER	28480	0160-3877
A17C8	0160-3877		CAPACITOR-FXD 100PF +-20% 200VDC CER	28480	0160-3877
A17C9	0180-1731		CAPACITOR-FXD 4.7UF+-10% 50VDC TA	0420J	150D475X905B2
A17C10	0180-1731		CAPACITOR-FXD 4.7UF+-10% 50VDC TA	0420J	150D475X905B2
A17C11	0180-1746		CAPACITOR-FXD 15UF+-10% 20VDC TA	0420J	150D156X902B2
A17C12	0180-0197		CAPACITOR-FXD 2.2UF+-10% 20VDC TA	0420J	150D225X9020A2
A17C13	0180-1746		CAPACITOR-FXD 15UF+-10% 20VDC TA	0420J	150D156X902B2
A17C14	0180-0197		CAPACITOR-FXD 2.2UF+-10% 20VDC TA	0420J	150D225X9020A2
A17C15	0180-1731		CAPACITOR-FXD 4.7UF+-10% 50VDC TA	0420J	150D475X905B2
A17C16	0180-1731		CAPACITOR-FXD 4.7UF+-10% 50VDC TA	0420J	150D475X905B2
A17CR1 THRU A17CR25	1901-0050		DIODE-SWITCHING 80V 200MA 2NS DO-7	28480	1901-0050
A17L1	9140-0210		COIL-MLD 100UH 5% Q=50 .155DX.375LG	02178	15-1315-12J
A17L2	9140-0210		COIL-MLD 100UH 5% Q=50 .155DX.375LG	02178	15-1315-12J
A17L3	9140-0210		COIL-MLD 100UH 5% Q=50 .155DX.375LG	02178	15-1315-12J
A17L4	9140-0210		COIL-MLD 100UH 5% Q=50 .155DX.375LG	02178	15-1315-12J
A17MP1	1480-0073		PIN;DRIVE 0.250" LG	0000J	OBD
A17MP2	1480-0073		PIN;DRIVE 0.250" LG	0000J	OBD
A17MP3	4040-0754	1	EXTRACTOR-PC BOARD BLU POLYC	28480	4040-0754
A17MP4	4040-0748		EXTRACTOR-PC BOARD BLK POLYC	28480	4040-0748
A17Q1	1855-0020		TRANSISTOR J-FET N-CHAN D-MODE TO-18 SI	28480	1855-0020
A17Q2	1855-0020		TRANSISTOR J-FET N-CHAN D-MODE TO-18 SI	28480	1855-0020
A17Q3	1855-0082		TRANSISTOR MOSFET P-CHAN D-MODE SI	28480	1855-0082
A17Q4	1855-0020		TRANSISTOR J-FET N-CHAN D-MODE TO-18 SI	28480	1855-0020
A17Q5	1855-0082		TRANSISTOR MOSFET P-CHAN D-MODE SI	28480	1855-0082
A17Q6	1855-0020		TRANSISTOR J-FET N-CHAN D-MODE TO-18 SI	28480	1855-0020
A17Q7	1855-0082		TRANSISTOR MOSFET P-CHAN D-MODE SI	28480	1855-0082
A17Q8	1855-0020		TRANSISTOR J-FET N-CHAN D-MODE TO-18 SI	28480	1855-0020
A17Q9	1854-0404		TRANSISTOR NPN SI TO-18 PD=360MW	28480	1854-0404
A17Q10	1855-0020		TRANSISTOR J-FET N-CHAN D-MODE TO-18 SI	28480	1855-0020
A17Q11	1854-0404		TRANSISTOR NPN SI TO-18 PD=360MW	28480	1854-0404
A17Q12	1855-0020		TRANSISTOR J-FET N-CHAN D-MODE TO-18 SI	28480	1855-0020
A17Q13	1854-0404		TRANSISTOR NPN SI TO-18 PD=360MW	28480	1854-0404
A17Q14	1855-0020		TRANSISTOR J-FET N-CHAN D-MODE TO-18 SI	28480	1855-0020
A17Q15	1854-0404		TRANSISTOR NPN SI TO-18 PD=360MW	28480	1854-0404
A17Q16	1855-0020		TRANSISTOR J-FET N-CHAN D-MODE TO-18 SI	28480	1855-0020
A17Q17	1854-0404		TRANSISTOR NPN SI TO-18 PD=360MW	28480	1854-0404
A17Q18	1855-0020		TRANSISTOR J-FET N-CHAN D-MODE TO-18 SI	28480	1855-0020
A17Q19	1854-0404		TRANSISTOR NPN SI TO-18 PD=360MW	28480	1854-0404
A17Q20	1855-0020		TRANSISTOR J-FET N-CHAN D-MODE TO-18 SI	28480	1855-0020
A17Q21	1854-0404		TRANSISTOR NPN SI TO-18 PD=360MW	28480	1854-0404
A17Q22	1854-0404		TRANSISTOR NPN SI TO-18 PD=360MW	28480	1854-0404
A17Q23	1855-0020		TRANSISTOR J-FET N-CHAN D-MODE TO-18 SI	28480	1855-0020
A17Q24	1854-0404		TRANSISTOR NPN SI TO-18 PD=360MW	28480	1854-0404
A17Q25	1855-0020		TRANSISTOR J-FET N-CHAN D-MODE TO-18 SI	28480	1855-0020

See introduction to this section for ordering information

Scans by ARTEK MEDIA =>

Table 6-2. Replaceable Parts

Reference Designation	HP Part Number	Qty	Description	Mfr Code	Mfr Part Number
A17Q26	1854-0404		TRANSISTOR NPN SI TO-18 PD=360MW	28480	1854-0404
A17Q27	1855-0020		TRANSISTOR J-FET N-CHAN D-MODE TO-18 SI	28480	1855-0020
A17Q28	1854-0404		TRANSISTOR NPN SI TO-18 PD=360MW	28480	1854-0404
A17Q29	1855-0020		TRANSISTOR J-FET N-CHAN D-MODE TO-18 SI	28480	1855-0020
A17Q30	1854-0404		TRANSISTOR NPN SI TO-18 PD=360MW	28480	1854-0404
A17Q31	1855-0020		TRANSISTOR J-FET N-CHAN D-MODE TO-18 SI	28480	1855-0020
A17Q32	1854-0404		TRANSISTOR NPN SI TO-18 PD=360MW	28480	1854-0404
A17Q33	1855-0020		TRANSISTOR J-FET N-CHAN D-MODE TO-18 SI	28480	1855-0020
A17Q34	1854-0404		TRANSISTOR NPN SI TO-18 PD=360MW	28480	1854-0404
A17Q35	1853-0007		TRANSISTOR PNP 2N3251 SI TO-18 PD=360MW	0203G	2N3251
A17Q36	1854-0404		TRANSISTOR NPN SI TO-18 PD=360MW	28480	1854-0404
A17Q37	1854-0404		TRANSISTOR NPN SI TO-18 PD=360MW	28480	1854-0404
A17Q38	1855-0020		TRANSISTOR J-FET N-CHAN D-MODE TO-18 SI	28480	1855-0020
A17R1	0698-8832	1	RESISTOR 12.3K .1% .125W F TC=0+-10	0227C	MAR6
A17R2	0698-8833	7	RESISTOR 10K .1% .125W F TC=0+-10	0227C	MAR6
A17R3	0698-3453	2	RESISTOR 196K 1% .125W F TC=0+-100	03298	C4-1/8-T0-1963-F
A17R4	0698-3260		RESISTOR 464K 1% .125W F TC=0+-100	0160G	CC
A17R5	0698-8807	1	RESISTOR 39K .1% .125W F TC=0+-25	0107D	H8
A17R6	0698-0085		RESISTOR 2.61K 1% .125W F TC=0+-100	03298	C4-1/8-T0-2611-F
A17R7	0757-0416		RESISTOR 511 1% .125W F TC=0+-100	03298	C4-1/8-T0-511R-F
A17R8	0757-0280		RESISTOR 1K 1% .125W F TC=0+-100	03298	C4-1/8-T0-1001-F
A17R9*	0698-3158	4	RESISTOR 23.7K 1% .125W F TC=0+-100	03298	C4-1/8-T0-2372-F
			*FACTORY SELECTED PART		
A17R10	0698-8838	1	RESISTOR 3.52K .1% .125W F TC=0+-10	0227C	MAR6
A17R11	2100-1972		RESISTOR-TRMR 20K 10% WW SIDE-ADJ 20-TRN	0374D	3005P-1-203
A17R12	0757-0394	3	RESISTOR 51.1 1% .125W F TC=0+-100	03298	C4-1/8-T0-51R1-F
A17R13	0698-8835	4	RESISTOR 5K .1% .125W F TC=0+-10	0227C	MAR6
A17R14	0698-8885	19	RESISTOR 20K .01% .125W F TC=0+-10	0227C	MAR6
A17R15	0698-8885		RESISTOR 20K .01% .125W F TC=0+-10	0227C	MAR6
A17R16	0698-0085		RESISTOR 2.61K 1% .125W F TC=0+-100	03298	C4-1/8-T0-2611-F
A17R17	0698-8885		RESISTOR 20K .01% .125W F TC=0+-10	0227C	MAR6
A17R18	0698-6248	2	RESISTOR 400K 1% .125W F TC=0+-100	0160G	CC
A17R19	0698-8885		RESISTOR 20K .01% .125W F TC=0+-10	0227C	MAR6
A17R20	0698-0083		RESISTOR 1.96K 1% .125W F TC=0+-100	03298	C4-1/8-T0-1961-F
A17R21	0698-8885		RESISTOR 20K .01% .125W F TC=0+-10	0227C	MAR6
A17R22	0698-6630		RESISTOR 20K .1% .125W F TC=0+-25	03298	NE55
A17R23	0698-8885		RESISTOR 20K .01% .125W F TC=0+-10	0227C	MAR6
A17R24	0757-0465		RESISTOR 100K 1% .125W F TC=0+-100	03298	C4-1/8-T0-1003-F
A17R25	0757-0199		RESISTOR 21.5K 1% .125W F TC=0+-100	03298	C4-1/8-T0-2152-F
A17R26	0757-0458		RESISTOR 51.1K 1% .125W F TC=0+-100	03298	C4-1/8-T0-5112-F
A17R27	0757-0458		RESISTOR 51.1K 1% .125W F TC=0+-100	03298	C4-1/8-T0-5112-F
A17R28	0757-0465		RESISTOR 100K 1% .125W F TC=0+-100	03298	C4-1/8-T0-1003-F
A17R29	0757-0440		RESISTOR 7.5K 1% .125W F TC=0+-100	03298	C4-1/8-T0-7501-F
A17R30	0698-3156		RESISTOR 14.7K 1% .125W F TC=0+-100	03298	C4-1/8-T0-1472-F
A17R31	0757-0465		RESISTOR 100K 1% .125W F TC=0+-100	03298	C4-1/8-T0-1003-F
A17R32	0757-0440		RESISTOR 7.5K 1% .125W F TC=0+-100	03298	C4-1/8-T0-7501-F
A17R33	0698-3156		RESISTOR 14.7K 1% .125W F TC=0+-100	03298	C4-1/8-T0-1472-F
A17R34	0698-8885		RESISTOR 20K .01% .125W F TC=0+-10	0227C	MAR6
A17R35	0698-8845	2	RESISTOR 124.46K .1% .125W F TC=0+-25	0107D	H8
A17R36	0698-8886	3	RESISTOR 4K .01% .125W F TC=0+-10	0227C	MAR6
A17R37	0757-0465		RESISTOR 100K 1% .125W F TC=0+-100	03298	C4-1/8-T0-1003-F
A17R38	0757-0199		RESISTOR 21.5K 1% .125W F TC=0+-100	03298	C4-1/8-T0-2152-F
A17R39	0757-0199		RESISTOR 21.5K 1% .125W F TC=0+-100	03298	C4-1/8-T0-2152-F
A17R40	0698-8885		RESISTOR 20K .01% .125W F TC=0+-10	0227C	MAR6
A17R41	0698-8844	2	RESISTOR 248.9K .1% .125W F TC=0+-25	0107D	H8
A17R42	0683-6855	4	RESISTOR 6.8M 5% .25W FC TC=-900/+1100	0160G	CB6855
A17R43	2100-1972		RESISTOR-TRMR 20K 10% WW SIDE-ADJ 20-TRN	0374D	3005P-1-203
A17R44	0698-8887	2	RESISTOR 8K .01% .125W F TC=0+-10	0227C	MAR6
A17R45	0757-0465		RESISTOR 100K 1% .125W F TC=0+-100	03298	C4-1/8-T0-1003-F
A17R46	0757-0199		RESISTOR 21.5K 1% .125W F TC=0+-100	03298	C4-1/8-T0-2152-F
A17R47	0698-8885		RESISTOR 20K .01% .125W F TC=0+-10	0227C	MAR6
A17R48	0698-8843	2	RESISTOR 373.4K .1% .125W F TC=0+-25	0107D	H8
A17R49	0683-6855		RESISTOR 6.8M 5% .25W FC TC=-900/+1100	0160G	CB6855
A17R50	2100-1972		RESISTOR-TRMR 20K 10% WW SIDE-ADJ 20-TRN	0374D	3005P-1-203
A17R51	0698-8888	2	RESISTOR 12K .01% .125W F TC=0+-10	0227C	MAR6
A17R52	0757-0465		RESISTOR 100K 1% .125W F TC=0+-100	03298	C4-1/8-T0-1003-F
A17R53	0757-0199		RESISTOR 21.5K 1% .125W F TC=0+-100	03298	C4-1/8-T0-2152-F
A17R54	0698-8885		RESISTOR 20K .01% .125W F TC=0+-10	0227C	MAR6
A17R55	0698-8842	2	RESISTOR 497.8K .1% .125W F TC=0+-25	0107D	H8
A17R56	0683-6855		RESISTOR 6.8M 5% .25W FC TC=-900/+1100	0160G	CB6855
A17R57	2100-1972		RESISTOR-TRMR 20K 10% WW SIDE-ADJ 20-TRN	0374D	3005P-1-203
A17R58	0698-8889	2	RESISTOR 16K .01% .125W F TC=0+-10	0227C	MAR6
A17R59	0757-0465		RESISTOR 100K 1% .125W F TC=0+-100	03298	C4-1/8-T0-1003-F
A17R60	0757-0199		RESISTOR 21.5K 1% .125W F TC=0+-100	03298	C4-1/8-T0-2152-F
A17R61	0698-8885		RESISTOR 20K .01% .125W F TC=0+-10	0227C	MAR6
A17R62	0698-8841	2	RESISTOR 622.3K .1% .125W F TC=0+-25	0107D	H8
A17R63	0683-6855		RESISTOR 6.8M 5% .25W FC TC=-900/+1100	0160G	CB6855
A17R64	2100-1972		RESISTOR-TRMR 20K 10% WW SIDE-ADJ 20-TRN	0374D	3005P-1-203

See introduction to this section for ordering information

Scans by ARTEK MEDIA =>

Table 6-2. Replaceable Parts

Reference Designation	HP Part Number	Qty	Description	Mfr Code	Mfr Part Number
A17R65	0698-8885		RESISTOR 20K .01% .125W F TC=0+-10	0227C	MAR6
A17R66	0757-0465		RESISTOR 100K 1% .125W F TC=0+-100	03298	C4-1/8-T0-1003-F
A17R67	0757-0199		RESISTOR 21.5K 1% .125W F TC=0+-100	03298	C4-1/8-T0-2152-F
A17R68	0698-6248		RESISTOR 400K 1% .125W F TC=0+-100	0160G	CC
A17R69	0757-0200	6	RESISTOR 5.62K 1% .125W F TC=0+-100	03298	C4-1/8-T0-5621-F
A17R70	0698-8885		RESISTOR 20K .01% .125W F TC=0+-10	0227C	MAR6
A17R71	0698-8890	1	RESISTOR 19.512K .01% .125W F TC=0+-10	0227C	MAR6
A17R72	0698-8886		RESISTOR 4K .01% .125W F TC=0+-10	0227C	MAR6
A17R73	0757-0465		RESISTOR 100K 1% .125W F TC=0+-100	03298	C4-1/8-T0-1003-F
A17R74	0757-0199		RESISTOR 21.5K 1% .125W F TC=0+-100	03298	C4-1/8-T0-2152-F
A17R75	0757-0199		RESISTOR 21.5K 1% .125W F TC=0+-100	03298	C4-1/8-T0-2152-F
A17R76	0698-8885		RESISTOR 20K .01% .125W F TC=0+-10	0227C	MAR6
A17R77	0698-8845		RESISTOR 124.46K .1% .125W F TC=0+-25	0107D	H8
A17R78	0698-8886		RESISTOR 4K .01% .125W F TC=0+-10	0227C	MAR6
A17R79	0757-0465		RESISTOR 100K 1% .125W F TC=0+-100	03298	C4-1/8-T0-1003-F
A17R80	0757-0199		RESISTOR 21.5K 1% .125W F TC=0+-100	03298	C4-1/8-T0-2152-F
A17R81	0757-0199		RESISTOR 21.5K 1% .125W F TC=0+-100	03298	C4-1/8-T0-2152-F
A17R82	0698-8885		RESISTOR 20K .01% .125W F TC=0+-10	0227C	MAR6
A17R83	0698-8844		RESISTOR 248.9K .1% .125W F TC=0+-25	0107D	H8
A17R84	0698-8887		RESISTOR 8K .01% .125W F TC=0+-10	0227C	MAR6
A17R85	0757-0465		RESISTOR 100K 1% .125W F TC=0+-100	03298	C4-1/8-T0-1003-F
A17R86	0757-0199		RESISTOR 21.5K 1% .125W F TC=0+-100	03298	C4-1/8-T0-2152-F
A17R87	0757-0199		RESISTOR 21.5K 1% .125W F TC=0+-100	03298	C4-1/8-T0-2152-F
A17R88	0698-8885		RESISTOR 20K .01% .125W F TC=0+-10	0227C	MAR6
A17R89	0698-8843		RESISTOR 373.4K .1% .125W F TC=0+-25	0107D	H8
A17R90	0698-8888		RESISTOR 12K .01% .125W F TC=0+-10	0227C	MAR6
A17R91	0757-0465		RESISTOR 100K 1% .125W F TC=0+-100	03298	C4-1/8-T0-1003-F
A17R92	0757-0199		RESISTOR 21.5K 1% .125W F TC=0+-100	03298	C4-1/8-T0-2152-F
A17R93	0757-0199		RESISTOR 21.5K 1% .125W F TC=0+-100	03298	C4-1/8-T0-2152-F
A17R94	0698-8885		RESISTOR 20K .01% .125W F TC=0+-10	0227C	MAR6
A17R95	0698-8842		RESISTOR 497.8K .1% .125W F TC=0+-25	0107D	H8
A17R96	0698-8889		RESISTOR 16K .01% .125W F TC=0+-10	0227C	MAR6
A17R97	0757-0465		RESISTOR 100K 1% .125W F TC=0+-100	03298	C4-1/8-T0-1003-F
A17R98	0757-0199		RESISTOR 21.5K 1% .125W F TC=0+-100	03298	C4-1/8-T0-2152-F
A17R99	0757-0199		RESISTOR 21.5K 1% .125W F TC=0+-100	03298	C4-1/8-T0-2152-F
A17R100	0698-8885		RESISTOR 20K .01% .125W F TC=0+-10	0227C	MAR6
A17R101	0698-8841		RESISTOR 622.3K .1% .125W F TC=0+-25	0107D	H8
A17R102	0698-8885		RESISTOR 20K .01% .125W F TC=0+-10	0227C	MAR6
A17R103	0757-0465		RESISTOR 100K 1% .125W F TC=0+-100	03298	C4-1/8-T0-1003-F
A17R104	0757-0199		RESISTOR 21.5K 1% .125W F TC=0+-100	03298	C4-1/8-T0-2152-F
A17R105	0757-0199		RESISTOR 21.5K 1% .125W F TC=0+-100	03298	C4-1/8-T0-2152-F
A17R106	0698-8846	1	RESISTOR 83.33K .1% .125W F TC=0+-25	0107D	H8
A17R107	0698-4543	2	RESISTOR 487K 1% .125W F TC=0+-100	0160G	CC
A17R108	0698-6360		RESISTOR 10K .1% .125W F TC=0+-25	03298	NE55
A17R109	0757-0465		RESISTOR 100K 1% .125W F TC=0+-100	03298	C4-1/8-T0-1003-F
A17R110	0757-0199		RESISTOR 21.5K 1% .125W F TC=0+-100	03298	C4-1/8-T0-2152-F
A17R111	0757-0199		RESISTOR 21.5K 1% .125W F TC=0+-100	03298	C4-1/8-T0-2152-F
A17R112	0698-6353		RESISTOR 50K .1% .125W F TC=0+-25	0552D	CMF-55-1, T-9
A17R113	0698-4543		RESISTOR 487K 1% .125W F TC=0+-100	0160G	CC
A17R114	0698-6360		RESISTOR 10K .1% .125W F TC=0+-25	03298	NE55
A17R115	0757-0465		RESISTOR 100K 1% .125W F TC=0+-100	03298	C4-1/8-T0-1003-F
A17R116	0757-0199		RESISTOR 21.5K 1% .125W F TC=0+-100	03298	C4-1/8-T0-2152-F
A17R117	0757-0199		RESISTOR 21.5K 1% .125W F TC=0+-100	03298	C4-1/8-T0-2152-F
A17R118	0698-6630		RESISTOR 20K .1% .125W F TC=0+-25	03298	NE55
A17R119	0698-8877	1		28480	0698-8877
A17R120	0698-8806	1	RESISTOR 33.5K .1% .125W F TC=0+-25	0107D	H8
A17R121	0757-0465		RESISTOR 100K 1% .125W F TC=0+-100	03298	C4-1/8-T0-1003-F
A17R122	0757-0199		RESISTOR 21.5K 1% .125W F TC=0+-100	03298	C4-1/8-T0-2152-F
A17R123	0757-0199		RESISTOR 21.5K 1% .125W F TC=0+-100	03298	C4-1/8-T0-2152-F
A17R124	0757-0200		RESISTOR 5.62K 1% .125W F TC=0+-100	03298	C4-1/8-T0-5621-F
A17R125	2100-1972		RESISTOR-TRMR 20K 10% WW SIDE-ADJ 20-TRN	0374D	3005P-1-203
A17R126	0698-3438	7	RESISTOR 147 1% .125W F TC=0+-100	03298	C4-1/8-T0-147R-F
A17R127	0757-0394		RESISTOR 51.1 1% .125W F TC=0+-100	03298	C4-1/8-T0-51R1-F
A17R128	0698-3156		RESISTOR 14.7K 1% .125W F TC=0+-100	03298	C4-1/8-T0-1472-F
A17U1	1826-0261		IC 741 OP AMP	28480	1826-0261
A17U2	1826-0261		IC 741 OP AMP	28480	1826-0261
A17U3	1826-0261		IC 741 OP AMP	28480	1826-0261
A17U4	1826-0261		IC 741 OP AMP	28480	1826-0261
A17U5	1826-0261		IC 741 OP AMP	28480	1826-0261
A17U6	1826-0261		IC 741 OP AMP	28480	1826-0261
A17U7	1826-0261		IC 741 OP AMP	28480	1826-0261
A17U8	1826-0261		IC 741 OP AMP	28480	1826-0261
A17U9	1826-0261		IC 741 OP AMP	28480	1826-0261
A17VR1	1902-0680	2	DIODE-ZNR 1N827 6.2V 5% DO-7 PD=.25W	0199A	1N827
A17VR2	1902-3002		DIODE-ZNR 2.37V 5% DO-7 PD=.4W TC=-.074%	0203G	BZ 10939-2
A17VR3	1902-3182	7	DIODE-ZNR 12.1V 5% DO-7 PD=.4W TC=+.064%	0223G	FZ7268
A17VR4	1902-3171		DIODE-ZNR 11V 5% DO-7 PD=.4W TC=+.062%	0223G	FZ7264
A17VR5	1902-3182		DIODE-ZNR 12.1V 5% DO-7 PD=.4W TC=+.064%	0223G	FZ7268

See introduction to this section for ordering information

Scans by ARTEK MEDIA =>

Table 6-2. Replaceable Parts

Reference Designation	HP Part Number	Qty	Description	Mfr Code	Mfr Part Number
A17VR6	1902-0041		DIODE-ZNR 5.11V 5% DO-7 PD=.4W TC=-.009%	02036	BZ 10939-98
A18	08565-60021	1	ASSEMBLY, FULL MULTI-BAND	28480	08565-60021
A18C1	0160-0302	4	CAPACITOR-FXD .018UF +-10% 200VDC POLYE	0420J	292P18392
A18C2	0160-0302		CAPACITOR-FXD .018UF +-10% 200VDC POLYE	0420J	292P18392
A18C3	0160-0302		CAPACITOR-FXD .018UF +-10% 200VDC POLYE	0420J	292P18392
A18C4	0160-0302		CAPACITOR-FXD .018UF +-10% 200VDC POLYE	0420J	292P18392
A18C5	0180-1731		CAPACITOR-FXD 4.7UF+-10% 50VDC TA	0420J	150D475X9050B2
A18C6	0180-1746		CAPACITOR-FXD 15UF+-10% 20VDC TA	0420J	150D156X9020B2
A18C7	0180-1746		CAPACITOR-FXD 15UF+-10% 20VDC TA	0420J	150D156X9020B2
A18C8	0180-1731		CAPACITOR-FXD 4.7UF+-10% 50VDC TA	0420J	150D475X9050B2
A18CR1 THRU A18CR43	1901-0050		DIODE-SWITCHING 80V 200MA 2NS DO-7	28480	1901-0050
A18L1	9140-0210		COIL-MLD 100UH 5% Q=50 .155DX.375LG	02178	15-1315-12J
A18L2	9140-0210		COIL-MLD 100UH 5% Q=50 .155DX.375LG	02178	15-1315-12J
A18L3	9140-0210		COIL-MLD 100UH 5% Q=50 .155DX.375LG	02178	15-1315-12J
A18L4	9140-0210		COIL-MLD 100UH 5% Q=50 .155DX.375LG	02178	15-1315-12J
A18MP1	1480-0073		PIN;DRIVE 0.250" LG	0000J	OBD
A18MP2	1480-0073		PIN;DRIVE 0.250" LG	0000J	OBD
A18MP3	4040-0748		EXTRACTOR-PC BOARD BLK POLYC	28480	4040-0748
A18MP4	4040-0755	1	EXTRACTOR-PC BOARD VIO POLYC	28480	4040-0755
A18Q1	1853-0007		TRANSISTOR PNP 2N3251 SI TO-18 PD=360MW	02036	2N3251
A18Q2	1854-0404		TRANSISTOR NPN SI TO-18 PD=360MW	28480	1854-0404
A18Q3	1853-0007		TRANSISTOR PNP 2N3251 SI TO-18 PD=360MW	02036	2N3251
A18Q4	1853-0007		TRANSISTOR PNP 2N3251 SI TO-18 PD=360MW	02036	2N3251
A18Q5	1853-0007		TRANSISTOR PNP 2N3251 SI TO-18 PD=360MW	02036	2N3251
A18Q6	1853-0007		TRANSISTOR PNP 2N3251 SI TO-18 PD=360MW	02036	2N3251
A18Q7	1855-0020		TRANSISTOR J-FET N-CHAN D-MODE TO-18 SI	28480	1855-0020
A18Q8	1854-0404		TRANSISTOR NPN SI TO-18 PD=360MW	28480	1854-0404
A18Q9	1855-0020		TRANSISTOR J-FET N-CHAN D-MODE TO-18 SI	28480	1855-0020
A18Q10	1854-0404		TRANSISTOR NPN SI TO-18 PD=360MW	28480	1854-0404
A18Q11	1855-0020		TRANSISTOR J-FET N-CHAN D-MODE TO-18 SI	28480	1855-0020
A18Q12	1854-0404		TRANSISTOR NPN SI TO-18 PD=360MW	28480	1854-0404
A18Q13	1855-0020		TRANSISTOR J-FET N-CHAN D-MODE TO-18 SI	28480	1855-0020
A18Q14	1854-0404		TRANSISTOR NPN SI TO-18 PD=360MW	28480	1854-0404
A18Q15	1855-0020		TRANSISTOR J-FET N-CHAN D-MODE TO-18 SI	28480	1855-0020
A18Q16	1854-0404		TRANSISTOR NPN SI TO-18 PD=360MW	28480	1854-0404
A18Q17	1854-0404		TRANSISTOR NPN SI TO-18 PD=360MW	28480	1854-0404
A18Q18	1854-0404		TRANSISTOR NPN SI TO-18 PD=360MW	28480	1854-0404
A18Q19	1854-0404		TRANSISTOR NPN SI TO-18 PD=360MW	28480	1854-0404
A18Q20	1854-0404		TRANSISTOR NPN SI TO-18 PD=360MW	28480	1854-0404
A18Q21	1854-0404		TRANSISTOR NPN SI TO-18 PD=360MW	28480	1854-0404
A18Q22	1853-0007		TRANSISTOR PNP 2N3251 SI TO-18 PD=360MW	02036	2N3251
A18Q23	1853-0007		TRANSISTOR PNP 2N3251 SI TO-18 PD=360MW	02036	2N3251
A18Q24	1853-0007		TRANSISTOR PNP 2N3251 SI TO-18 PD=360MW	02036	2N3251
A18Q25	1853-0007		TRANSISTOR PNP 2N3251 SI TO-18 PD=360MW	02036	2N3251
A18Q26	1853-0007		TRANSISTOR PNP 2N3251 SI TO-18 PD=360MW	02036	2N3251
A18Q27	1854-0404		TRANSISTOR NPN SI TO-18 PD=360MW	28480	1854-0404
A18Q28	1854-0404		TRANSISTOR NPN SI TO-18 PD=360MW	28480	1854-0404
A18Q29	1854-0404		TRANSISTOR NPN SI TO-18 PD=360MW	28480	1854-0404
A18Q30	1854-0404		TRANSISTOR NPN SI TO-18 PD=360MW	28480	1854-0404
A18Q31	1854-0404		TRANSISTOR NPN SI TO-18 PD=360MW	28480	1854-0404
A18Q32	1854-0404		TRANSISTOR NPN SI TO-18 PD=360MW	28480	1854-0404
A18Q33	1854-0404		TRANSISTOR NPN SI TO-18 PD=360MW	28480	1854-0404
A18Q34	1855-0020		TRANSISTOR J-FET N-CHAN D-MODE TO-18 SI	28480	1855-0020
A18Q35	1855-0020		TRANSISTOR J-FET N-CHAN D-MODE TO-18 SI	28480	1855-0020
A18Q36	1854-0404		TRANSISTOR NPN SI TO-18 PD=360MW	28480	1854-0404
A18Q37	1854-0404		TRANSISTOR NPN SI TO-18 PD=360MW	28480	1854-0404
A18Q38	1855-0020		TRANSISTOR J-FET N-CHAN D-MODE TO-18 SI	28480	1855-0020
A18R1	0698-6630		RESISTOR 20K .1% .125W F TC=0+-25	03298	NE55
A18R2	0698-8851	1		28480	0698-8881
A18R3	0757-0199		RESISTOR 21.5K 1% .125W F TC=0+-100	03298	C4-1/8-T0-2152-F
A18R4	0698-8850	1		28480	0698-8850
A18R5	0698-6630		RESISTOR 20K .1% .125W F TC=0+-25	03298	NE55
A18R6	0698-6630		RESISTOR 20K .1% .125W F TC=0+-25	03298	NE55
A18R7	0698-8867	1		28480	0698-8867
A18R8	0698-8863	1	RESISTOR 5.2K .1% .125W F TC=0+-25	0107D	H8
A18R9	0698-8864	1		28480	0698-8864
A18R10	0698-8865	1		28480	0698-8865
A18R11	0698-8866	1		28480	0698-8866
A18R12	0757-0199		RESISTOR 21.5K 1% .125W F TC=0+-100	03298	C4-1/8-T0-2152-F
A18R13	0757-0439		RESISTOR 6.81K 1% .125W F TC=0+-100	03298	C4-1/8-T0-6811-F
A18R14	0757-0199		RESISTOR 21.5K 1% .125W F TC=0+-100	03298	C4-1/8-T0-2152-F
A18R15	0757-0199		RESISTOR 21.5K 1% .125W F TC=0+-100	03298	C4-1/8-T0-2152-F

See introduction to this section for ordering information

Scans by ARTEK MEDIA =>

Table 6-2. Replaceable Parts

Reference Designation	HP Part Number	Qty	Description	Mfr Code	Mfr Part Number
A18R16	0757-0439		RESISTOR 6.81K 1% .125W F TC=0+-100	0329B	C4-1/8-T0-6811-F
A18R17	0757-0199		RESISTOR 21.5K 1% .125W F TC=0+-100	0329B	C4-1/8-T0-2152-F
A18R18	0757-0199		RESISTOR 21.5K 1% .125W F TC=0+-100	0329B	C4-1/8-T0-2152-F
A18R19	0757-0439		RESISTOR 6.81K 1% .125W F TC=0+-100	0329B	C4-1/8-T0-6811-F
A18R20	0757-0199		RESISTOR 21.5K 1% .125W F TC=0+-100	0329B	C4-1/8-T0-2152-F
A18R21	0757-0199		RESISTOR 21.5K 1% .125W F TC=0+-100	0329B	C4-1/8-T0-2152-F
A18R22	0757-0439		RESISTOR 6.81K 1% .125W F TC=0+-100	0329B	C4-1/8-T0-6811-F
A18R23	0757-0199		RESISTOR 21.5K 1% .125W F TC=0+-100	0329B	C4-1/8-T0-2152-F
A18R24	0757-0439		RESISTOR 6.81K 1% .125W F TC=0+-100	0329B	C4-1/8-T0-6811-F
A18R25	0757-0199		RESISTOR 21.5K 1% .125W F TC=0+-100	0329B	C4-1/8-T0-2152-F
A18R26	0757-0199		RESISTOR 21.5K 1% .125W F TC=0+-100	0329B	C4-1/8-T0-2152-F
A18R27	0757-0199		RESISTOR 21.5K 1% .125W F TC=0+-100	0329B	C4-1/8-T0-2152-F
A18R28	0698-6630		RESISTOR 20K .1% .125W F TC=0+-25	0329B	NE55
A18R29	0698-6630		RESISTOR 20K .1% .125W F TC=0+-25	0329B	NE55
A18R30	0757-0440		RESISTOR 7.5K 1% .125W F TC=0+-100	0329B	C4-1/8-T0-7501-F
A18R31	0698-3260		RESISTOR 464K 1% .125W F TC=0+-100	0160G	CC
A18R32	0757-0458		RESISTOR 51.1K 1% .125W F TC=0+-100	0329B	C4-1/8-T0-5112-F
A18R33	0698-3260		RESISTOR 464K 1% .125W F TC=0+-100	0160G	CC
A18R34	0757-0458		RESISTOR 51.1K 1% .125W F TC=0+-100	0329B	C4-1/8-T0-5112-F
A18R35	0698-3260		RESISTOR 464K 1% .125W F TC=0+-100	0160G	CC
A18R36	0757-0458		RESISTOR 51.1K 1% .125W F TC=0+-100	0329B	C4-1/8-T0-5112-F
A18R37	0698-3260		RESISTOR 464K 1% .125W F TC=0+-100	0160G	CC
A18R38	0757-0458		RESISTOR 51.1K 1% .125W F TC=0+-100	0329B	C4-1/8-T0-5112-F
A18R39	0757-0199		RESISTOR 21.5K 1% .125W F TC=0+-100	0329B	C4-1/8-T0-2152-F
A18R40	0698-0083		RESISTOR 1.96K 1% .125W F TC=0+-100	0329B	C4-1/8-T0-1961-F
A18R41	0698-6630		RESISTOR 20K .1% .125W F TC=0+-25	0329B	NE55
A18R42	0698-6630		RESISTOR 20K .1% .125W F TC=0+-25	0329B	NE55
A18R43	0698-3456	3	RESISTOR 287K 1% .125W F TC=0+-100	0329B	C4-1/8-T0-2873-F
A18R44	0757-0199		RESISTOR 21.5K 1% .125W F TC=0+-100	0329B	C4-1/8-T0-2152-F
A18R45	0757-0465		RESISTOR 100K 1% .125W F TC=0+-100	0329B	C4-1/8-T0-1003-F
A18R46	0698-8046	1	RESISTOR 16K .1% .125W F TC=0+-25	0299E	MF4C1/8-T9-1602-B
A18R47	0698-6630		RESISTOR 20K .1% .125W F TC=0+-25	0329B	NE55
A18R48	0698-3456		RESISTOR 287K 1% .125W F TC=0+-100	0329B	C4-1/8-T0-2873-F
A18R49	0757-0199		RESISTOR 21.5K 1% .125W F TC=0+-100	0329B	C4-1/8-T0-2152-F
A18R50	0757-0465		RESISTOR 100K 1% .125W F TC=0+-100	0329B	C4-1/8-T0-1003-F
A18R51	0698-8859	1	RESISTOR 12K .1% .125W F TC=0+-25	0107D	H8
A18R52	0698-6630		RESISTOR 20K .1% .125W F TC=0+-25	0329B	NE55
A18R53	0757-0136	1	RESISTOR 619K 1% .5W F TC=0+-100	0299E	MF7C1/2-T0-6193-F
A18R54	0757-0199		RESISTOR 21.5K 1% .125W F TC=0+-100	0329B	C4-1/8-T0-2152-F
A18R55	0757-0465		RESISTOR 100K 1% .125W F TC=0+-100	0329B	C4-1/8-T0-1003-F
A18R56	0698-6361	1	RESISTOR 8K .1% .125W F TC=0+-25	0329B	NE55
A18R57	0698-6630		RESISTOR 20K .1% .125W F TC=0+-25	0329B	NE55
A18R58	0698-3456		RESISTOR 287K 1% .125W F TC=0+-100	0329B	C4-1/8-T0-2873-F
A18R59	0757-0199		RESISTOR 21.5K 1% .125W F TC=0+-100	0329B	C4-1/8-T0-2152-F
A18R60	0757-0465		RESISTOR 100K 1% .125W F TC=0+-100	0329B	C4-1/8-T0-1003-F
A18R61	0698-6322	1	RESISTOR 4K .1% .125W F TC=0+-25	0329B	NE55
A18R62	0698-6630		RESISTOR 20K .1% .125W F TC=0+-25	0329B	NE55
A18R63	0757-0467		RESISTOR 121K 1% .125W F TC=0+-100	0329B	C4-1/8-T0-1213-F
A18R64	0757-0199		RESISTOR 21.5K 1% .125W F TC=0+-100	0329B	C4-1/8-T0-2152-F
A18R65	0757-0465		RESISTOR 100K 1% .125W F TC=0+-100	0329B	C4-1/8-T0-1003-F
A18R66	0757-0199		RESISTOR 21.5K 1% .125W F TC=0+-100	0329B	C4-1/8-T0-2152-F
A18R67	0757-0199		RESISTOR 21.5K 1% .125W F TC=0+-100	0329B	C4-1/8-T0-2152-F
A18R68	0757-0467		RESISTOR 121K 1% .125W F TC=0+-100	0329B	C4-1/8-T0-1213-F
A18R69	0757-0199		RESISTOR 21.5K 1% .125W F TC=0+-100	0329B	C4-1/8-T0-2152-F
A18R70	0757-0465		RESISTOR 100K 1% .125W F TC=0+-100	0329B	C4-1/8-T0-1003-F
A18R71	0757-0199		RESISTOR 21.5K 1% .125W F TC=0+-100	0329B	C4-1/8-T0-2152-F
A18R72	0757-0462		RESISTOR 75K 1% .125W F TC=0+-100	0329B	C4-1/8-T0-7502-F
A18R73	0757-0199		RESISTOR 21.5K 1% .125W F TC=0+-100	0329B	C4-1/8-T0-2152-F
A18R74	0757-0459		RESISTOR 56.2K 1% .125W F TC=0+-100	0329B	C4-1/8-T0-5622-F
A18R75	0757-0199		RESISTOR 21.5K 1% .125W F TC=0+-100	0329B	C4-1/8-T0-2152-F
A18R76	0698-3161		RESISTOR 38.3K 1% .125W F TC=0+-100	0329B	C4-1/8-T0-3832-F
A18R77	0757-0199		RESISTOR 21.5K 1% .125W F TC=0+-100	0329B	C4-1/8-T0-2152-F
A18R78	0757-0123		RESISTOR 34.8K 1% .125W F TC=0+-100	0160G	CC
A18R79	0698-8853	1		28480	0698-8853
A18R80	0698-6630		RESISTOR 20K .1% .125W F TC=0+-25	0329B	NE55
A18R81	0698-8856	1	RESISTOR 13.56K .1% .125W F TC=0+-25	0107D	H8
A18R82	0757-0199		RESISTOR 21.5K 1% .125W F TC=0+-100	0329B	C4-1/8-T0-2152-F
A18R83	0757-0465		RESISTOR 100K 1% .125W F TC=0+-100	0329B	C4-1/8-T0-1003-F
A18R84	0698-8855	1		28480	0698-8855
A18R85	0698-6630		RESISTOR 20K .1% .125W F TC=0+-25	0329B	NE55
A18R86	0698-8858	1	RESISTOR 12.4K .1% .125W F TC=0+-25	0107D	H8
A18R87	0757-0199		RESISTOR 21.5K 1% .125W F TC=0+-100	0329B	C4-1/8-T0-2152-F
A18R88	0757-0199		RESISTOR 21.5K 1% .125W F TC=0+-100	0329B	C4-1/8-T0-2152-F
A18R89	0757-0465		RESISTOR 100K 1% .125W F TC=0+-100	0329B	C4-1/8-T0-1003-F
A18R90	0698-8854	1		28480	0698-8854

See introduction to this section for ordering information

Scans by ARTEK MEDIA =>

Table 6-2. Replaceable Parts

Reference Designation	HP Part Number	Qty	Description	Mfr Code	Mfr Part Number
A18R91	0698-6630		RESISTOR 20K ,1% ,125W F TC=0+-25	03298	NE55
A18R92	0698-8857	1	RESISTOR 12.56K ,1% ,125W F TC=0+-25	01070	H8
A18R93	0757-0199		RESISTOR 21.5K 1% ,125W F TC=0+-100	03298	C4-1/8-T0-2152-F
A18R94	0757-0199		RESISTOR 21.5K 1% ,125W F TC=0+-100	03298	C4-1/8-T0-2152-F
A18R95	0757-0465		RESISTOR 100K 1% ,125W F TC=0+-100	03298	C4-1/8-T0-1003-F
A18R96	0698-6630		RESISTOR 20K ,1% ,125W F TC=0+-25	03298	NE55
A18R97	0698-6630		RESISTOR 20K ,1% ,125W F TC=0+-25	03298	NE55
A18R98	0698-6630		RESISTOR 20K ,1% ,125W F TC=0+-25	03298	NE55
A18R99	0698-6630		RESISTOR 20K ,1% ,125W F TC=0+-25	03298	NE55
A18R100	0757-0199		RESISTOR 21.5K 1% ,125W F TC=0+-100	03298	C4-1/8-T0-2152-F
A18R101	0683-1058	3	RESISTOR 1M 5% ,25W FC TC=-800/+900	01600	CB1055
A18R102	0757-0199		RESISTOR 21.5K 1% ,125W F TC=0+-100	03298	C4-1/8-T0-2152-F
A18R103	0757-0199		RESISTOR 21.5K 1% ,125W F TC=0+-100	03298	C4-1/8-T0-2152-F
A18R104	0757-0442		RESISTOR 10K 1% ,125W F TC=0+-100	03298	C4-1/8-T0-1002-F
A18R105	0698-3450		RESISTOR 42.2K 1% ,125W F TC=0+-100	03298	C4-1/8-T0-4222-F
A18R106	0698-6630		RESISTOR 20K ,1% ,125W F TC=0+-25	03298	NE55
A18R107	0698-6630		RESISTOR 20K ,1% ,125W F TC=0+-25	03298	NE55
A18R108	0757-0199		RESISTOR 21.5K 1% ,125W F TC=0+-100	03298	C4-1/8-T0-2152-F
A18R109	0683-1055		RESISTOR 1M 5% ,25W FC TC=-800/+900	01600	CB1058
A18R110	0757-0199		RESISTOR 21.5K 1% ,125W F TC=0+-100	03298	C4-1/8-T0-2152-F
A18R111	0757-0199		RESISTOR 21.5K 1% ,125W F TC=0+-100	03298	C4-1/8-T0-2152-F
A18R112	0757-0442		RESISTOR 10K 1% ,125W F TC=0+-100	03298	C4-1/8-T0-1002-F
A18R113	0698-3450		RESISTOR 42.2K 1% ,125W F TC=0+-100	03298	C4-1/8-T0-4222-F
A18U1	1826-0092		IC OP AMP	28480	1826-0092
A18U2	1826-0092		IC OP AMP	28480	1826-0092
A18U3	1826-0092		IC OP AMP	28480	1826-0092
A18U4	1826-0092		IC OP AMP	28480	1826-0092
A18U5	1826-0092		IC OP AMP	28480	1826-0092
A18U6	1826-0092		IC OP AMP	28480	1826-0092
A18U7	1826-0092		IC OP AMP	28480	1826-0092
A18U8	1826-0092		IC OP AMP	28480	1826-0092
A18VR1	1902-0064	2	DIODE-ZNR 7.5V 5% DO-7 PD=.4W TC=+.05%	02213	FZ7248
A18VR2	1902-0041		DIODE-ZNR 5.11V 5% DO-7 PD=.4W TC=-.009%	02303	BZ 10939-98
A18VR3	1902-3182		DIODE-ZNR 12.1V 5% DO-7 PD=.4W TC=+.064%	02213	FZ7268
A18VR4	1902-0025		DIODE-ZNR 10V 5% DO-7 PD=.4W TC=+.06%	02213	FZ7260
A18VR5	1902-3182		DIODE-ZNR 12.1V 5% DO-7 PD=.4W TC=+.064%	02213	FZ7268
A19	08565-60022	1	ASSEMBLY, YIG DRIVER	28480	08565-60022
A19C1	0160-3466		CAPACITOR-FXD 100PF +-10% 1KVDC CER	28480	0160-3466
A19C2	0160-0163		CAPACITOR-FXD .033UF +-10% 200VDC POLYE	04203	292P33392
A19C3	0160-0174	1	CAPACITOR-FXD .47UF +80-20% 25VDC CER	28480	0160-0174
A19C4	0160-3466		CAPACITOR-FXD 100PF +-10% 1KVDC CER	28480	0160-3466
A19C5	0180-2208		CAPACITOR-FXD 220UF+-10% 10VDC TA	04203	150D227X901082
A19C6	0180-2208		CAPACITOR-FXD 220UF+-10% 10VDC TA	04203	150D227X901082
A19C7	0180-2208		CAPACITOR-FXD 220UF+-10% 10VDC TA	04203	150D227X901082
A19C8	0180-1746		CAPACITOR-FXD 15UF+-10% 20VDC TA	04203	150D156X902082
A19C9	0180-1746		CAPACITOR-FXD 15UF+-10% 20VDC TA	04203	150D156X902082
A19C10	0180-1746		CAPACITOR-FXD 15UF+-10% 20VDC TA	04203	150D156X902082
A19C11	0180-1731		CAPACITOR-FXD 4.7UF+-10% 50VDC TA	04203	150D475X905082
A19C12	0180-1731		CAPACITOR-FXD 4.7UF+-10% 50VDC TA	04203	150D475X905082
A19CR1	1901-0050		DIODE-SWITCHING 80V 200MA 2NS DO-7	28480	1901-0050
A19CR2	1901-0050		DIODE-SWITCHING 80V 200MA 2NS DO-7	28480	1901-0050
A19CR3	1901-0050		DIODE-SWITCHING 80V 200MA 2NS DO-7	28480	1901-0050
A19CR4	1901-0050		DIODE-SWITCHING 80V 200MA 2NS DO-7	28480	1901-0050
A19CR5	1901-0050		DIODE-SWITCHING 80V 200MA 2NS DO-7	28480	1901-0050
A19CR6	1901-0050		DIODE-SWITCHING 80V 200MA 2NS DO-7	28480	1901-0050
A19CR7	1901-0050		DIODE-SWITCHING 80V 200MA 2NS DO-7	28480	1901-0050
A19CR8	1901-0050		DIODE-SWITCHING 80V 200MA 2NS DO-7	28480	1901-0050
A19E1	0340-0038	4	TERMINAL-STUD DBL-TUR PRESS-MTG	28480	0340-0038
A19E2	0340-0038		TERMINAL-STUD DBL-TUR PRESS-MTG	28480	0340-0038
A19E3	0340-0060		TERMINAL-STUD SPCL-FDTHRU PRESS-MTG	05761	FT-E-15
A19E4	0340-0060		TERMINAL-STUD SPCL-FDTHRU PRESS-MTG	05761	FT-E-15
A19E5	0340-0060		TERMINAL-STUD SPCL-FDTHRU PRESS-MTG	05761	FT-E-15
A19E6	0340-0038		TERMINAL-STUD DBL-TUR PRESS-MTG	28480	0340-0038
A19E7	0340-0038		TERMINAL-STUD DBL-TUR PRESS-MTG	28480	0340-0038
A19E8	0340-0060		TERMINAL-STUD SPCL-FDTHRU PRESS-MTG	05761	FT-E-15
A19E9	0340-0060		TERMINAL-STUD SPCL-FDTHRU PRESS-MTG	05761	FT-E-15
A19E10	0340-0060		TERMINAL-STUD SPCL-FDTHRU PRESS-MTG	05761	FT-E-15
A19E11	0340-0060		TERMINAL-STUD SPCL-FDTHRU PRESS-MTG	05761	FT-E-15
A19E12	0340-0060		TERMINAL-STUD SPCL-FDTHRU PRESS-MTG	05761	FT-E-15
A19E13	0340-0060		TERMINAL-STUD SPCL-FDTHRU PRESS-MTG	05761	FT-E-15
A19E14	0340-0060		TERMINAL-STUD SPCL-FDTHRU PRESS-MTG	05761	FT-E-15

See introduction to this section for ordering information

Scans by ARTEK MEDIA =>

Table 6-2. Replaceable Parts

Reference Designation	HP Part Number	Qty	Description	Mfr Code	Mfr Part Number
A19K1	0490-0884	1	RELAY-REED 1A 500MA 250VAC 24VDC-COIL	0274D	R-4175-3
A19L1	9140-0210		COIL-MLD 100UH 5% Q=50 .155DX.375LG	02178	15-1315-12J
A19L2	9140-0210		COIL-MLD 100UH 5% Q=50 .155DX.375LG	02178	15-1315-12J
A19L3	9140-0210		COIL-MLD 100UH 5% Q=50 .155DX.375LG	02178	15-1315-12J
A19MP1	08565-00010	1	BRACKET, HEAT SINK	28480	08565-00010
A19MP2	0340-0162	5	INSULATOR-XSTR ALUMINUM	28480	0340-0162
A19MP3	1480-0073		PIN:DRIVE 0.250" LG	0000J	DSO
A19MP4	4040-0748		EXTRACTOR-PC BOARD BLK POLYC	28480	4040-0748
A19MP5	0340-0039		TERMINAL BUSHING - TEFLON: MOUNTS IN	28480	0340-0039
A19MP6	0340-0039		TERMINAL BUSHING - TEFLON: MOUNTS IN	28480	0340-0039
A19MP7	0340-0039		TERMINAL BUSHING - TEFLON: MOUNTS IN	28480	0340-0039
A19MP8	0340-0039		TERMINAL BUSHING - TEFLON: MOUNTS IN	28480	0340-0039
A19MP9	2190-0003	8	WASHER-LK HLCL NO. 4 .115-IN-ID	28480	2190-0003
A19MP10	2190-0003		WASHER-LK HLCL NO. 4 .115-IN-ID	28480	2190-0003
A19MP11	2190-0003		WASHER-LK HLCL NO. 4 .115-IN-ID	28480	2190-0003
A19MP12	2190-0003		WASHER-LK HLCL NO. 4 .115-IN-ID	28480	2190-0003
A19MP13	2190-0003		WASHER-LK HLCL NO. 4 .115-IN-ID	28480	2190-0003
A19MP14	2190-0003		WASHER-LK HLCL NO. 4 .115-IN-ID	28480	2190-0003
A19MP15	2190-0003		WASHER-LK HLCL NO. 4 .115-IN-ID	28480	2190-0003
A19MP16	2190-0003		WASHER-LK HLCL NO. 4 .115-IN-ID	28480	2190-0003
A19MP17	2200-0109		SCREW-MACH 4-40 .438-IN-LG PAN-HD-POZI	28480	2200-0109
A19MP18	2200-0109		SCREW-MACH 4-40 .438-IN-LG PAN-HD-POZI	28480	2200-0109
A19MP19	2200-0109		SCREW-MACH 4-40 .438-IN-LG PAN-HD-POZI	28480	2200-0109
A19MP20	2200-0109		SCREW-MACH 4-40 .438-IN-LG PAN-HD-POZI	28480	2200-0109
A19MP21	2200-0109		SCREW-MACH 4-40 .438-IN-LG PAN-HD-POZI	28480	2200-0109
A19MP22	2200-0109		SCREW-MACH 4-40 .438-IN-LG PAN-HD-POZI	28480	2200-0109
A19MP23	2200-0109		SCREW-MACH 4-40 .438-IN-LG PAN-HD-POZI	28480	2200-0109
A19MP24	2200-0109		SCREW-MACH 4-40 .438-IN-LG PAN-HD-POZI	28480	2200-0109
A19MP25	2200-0109		SCREW-MACH 4-40 .438-IN-LG PAN-HD-POZI	28480	2200-0109
A19MP26	2200-0109		SCREW-MACH 4-40 .438-IN-LG PAN-HD-POZI	28480	2200-0109
A19MP27	2260-0002		NUT-HEX-DBL-CHAM 4-40-THD .062-IN-THK	28480	2260-0002
A19MP28	2260-0002		NUT-HEX-DBL-CHAM 4-40-THD .062-IN-THK	28480	2260-0002
A19MP29	2260-0002		NUT-HEX-DBL-CHAM 4-40-THD .062-IN-THK	28480	2260-0002
A19MP30	2260-0002		NUT-HEX-DBL-CHAM 4-40-THD .062-IN-THK	28480	2260-0002
A19MP31	2260-0002		NUT-HEX-DBL-CHAM 4-40-THD .062-IN-THK	28480	2260-0002
A19MP32	2260-0002		NUT-HEX-DBL-CHAM 4-40-THD .062-IN-THK	28480	2260-0002
A19MP33	2260-0002		NUT-HEX-DBL-CHAM 4-40-THD .062-IN-THK	28480	2260-0002
A19MP34	2260-0002		NUT-HEX-DBL-CHAM 4-40-THD .062-IN-THK	28480	2260-0002
A19MP35	2260-0002		NUT-HEX-DBL-CHAM 4-40-THD .062-IN-THK	28480	2260-0002
A19MP36	2260-0002		NUT-HEX-DBL-CHAM 4-40-THD .062-IN-THK	28480	2260-0002
A19Q1	1853-0038		TRANSISTOR PNP SI TO-39 PD=1W FT=100MHZ	28480	1853-0038
A19Q2	1853-0038		TRANSISTOR PNP SI TO-39 PD=1W FT=100MHZ	28480	1853-0038
A19Q3	1853-0414	2	TRANSISTOR PNP 2N6423 SI TO-66 PD=35W	28480	1853-0414
	6040-0239		THERMAL COMPOUND	99700	120-5GM
A19Q4	1853-0038		TRANSISTOR PNP SI TO-39 PD=1W FT=100MHZ	28480	1853-0038
A19Q5	1853-0038		TRANSISTOR PNP SI TO-39 PD=1W FT=100MHZ	28480	1853-0038
A19Q6	1853-0414		TRANSISTOR PNP 2N6423 SI TO-66 PD=35W	28480	1853-0414
	6040-0239		THERMAL COMPOUND	99700	120-5GM
A19R1	0757-0465		RESISTOR 100K 1% .125W F TC=0+-100	0329B	C4-1/8-T0-1003-F
A19R2	0698-8833		RESISTOR 10K .1% .125W F TC=0+-10	0227C	MAR6
A19R3	0698-8833		RESISTOR 10K .1% .125W F TC=0+-10	0227C	MAR6
A19R4	0698-8835		RESISTOR 5K .1% .125W F TC=0+-10	0227C	MAR6
A19R5	2100-2039	4	RESISTOR-TRMR 20K 5% WW SIDE-ADJ 10-TRN	0374D	3070P
A19R6	0698-8810	1	RESISTOR 27.4K .1% .125W F TC=0+-15	0227C	MAR6
A19R7	0698-8900	1	RESISTOR 3.93K .1% .125W F TC=0+-10	0227C	MAR6
A19R8	2100-2039		RESISTOR-TRMR 20K 5% WW SIDE-ADJ 10-TRN	0374D	3070P
A19R9	0698-8809	1	RESISTOR 31.5K .1% .125W F TC=0+-15	0227C	MAR6
A19R10	0698-8831	1	RESISTOR 13.4K .1% .125W F TC=0+-10	0227C	MAR6
A19R11	0698-8811	1	RESISTOR 5.25K .1% .125W F TC=0+-10	0227C	MAR6
A19R12	0698-8835		RESISTOR 5K .1% .125W F TC=0+-10	0227C	MAR6
A19R13	0698-8829		RESISTOR 20K .1% .125W F TC=0+-10	0227C	MAR6
A19R14	2100-2039		RESISTOR-TRMR 20K 5% WW SIDE-ADJ 10-TRN	0374D	3070P
A19R15	0698-8902	1	RESISTOR 46K .1% .125W F TC=0+-15	0227C	MAR6
A19R16	0698-8901	1	RESISTOR 29.7K .1% .125W F TC=0+-10	0227C	MAR6
A19R17	2100-2039		RESISTOR-TRMR 20K 5% WW SIDE-ADJ 10-TRN	0374D	3070P
A19R18	0698-8898	1	RESISTOR 22.6K .1% .125W F TC=0+-10	0227C	MAR6
A19R19	0698-8899	1	RESISTOR 15.3K .1% .125W F TC=0+-10	0227C	MAR6
A19R20	0698-3162		RESISTOR 46.4K 1% .125W F TC=0+-100	0329B	C4-1/8-T0-4642-F
A19R21	0757-0123		RESISTOR 34.8K 1% .125W F TC=0+-100	0160G	CC
A19R22	0757-0123		RESISTOR 34.8K 1% .125W F TC=0+-100	0160G	CC
A19R23	0683-1855	1	RESISTOR 1.8M 5% .25W FC TC=-900/+1100	0160G	CB1855
A19R24	0698-3260		RESISTOR 464K 1% .125W F TC=0+-100	0160G	CC
A19R25	0698-8835		RESISTOR 5K .1% .125W F TC=0+-10	0227C	MAR6

See introduction to this section for ordering information

Scans by ARTEK MEDIA =>

Table 6-2. Replaceable Parts

Reference Designation	HP Part Number	Qty	Description	Mfr Code	Mfr Part Number
A19R26	0698-8834	1	RESISTOR 9K .1% .125W F TC=0+-10	0227C	MAR6
A19R27	0698-8833		RESISTOR 10K .1% .125W F TC=0+-10	0227C	MAR6
A19R28	0698-8833		RESISTOR 10K .1% .125W F TC=0+-10	0227C	MAR6
A19R29	0698-8830	2	RESISTOR 14.4K .1% .125W F TC=0+-10	0227C	MAR6
A19R30	0698-8830		RESISTOR 14.4K .1% .125W F TC=0+-10	0227C	MAR6
A19R31	0757-0442		RESISTOR 10K 1% .125W F TC=0+-100	03298	C4-1/8-T0-1002-F
A19R32	0757-0290		RESISTOR 6.19K 1% .125W F TC=0+-100	0299E	MF4C1/8-T0-6191-F
A19R33	0698-3439	4	RESISTOR 178 1% .125W F TC=0+-100	03298	C4-1/8-T0-178R-F
A19R34	0811-3476	1	RESISTOR 150 1% 25W PW TC=0+-2	0185D	AL-25
A19R35	0698-3431	4	RESISTOR 23.7 1% .125W F TC=0+-100	03888	PME55-1/8-T0-23R7-F
A19R36	0757-0465		RESISTOR 100K 1% .125W F TC=0+-100	03298	C4-1/8-T0-1003-F
A19R37	0698-0083		RESISTOR 1.96K 1% .125W F TC=0+-100	03298	C4-1/8-T0-1961-F
A19R38	0698-3449		RESISTOR 28.7K 1% .125W F TC=0+-100	03298	C4-1/8-T0-2872-F
A19R39	2100-1972		RESISTOR-TRMR 20K 10% HW SIDE-ADJ 20-TRN	0374D	3005P-1-203
A19R40	0698-0083		RESISTOR 1.96K 1% .125W F TC=0+-100	03298	C4-1/8-T0-1961-F
A19R41	0698-3136		RESISTOR 17.8K 1% .125W F TC=0+-100	03298	C4-1/8-T0-1782-F
A19R42	2100-1972		RESISTOR-TRMR 20K 10% HW SIDE-ADJ 20-TRN	0374D	3005P-1-203
A19R43	0698-0083		RESISTOR 1.96K 1% .125W F TC=0+-100	03298	C4-1/8-T0-1961-F
A19R44	0698-3156		RESISTOR 14.7K 1% .125W F TC=0+-100	03298	C4-1/8-T0-1472-F
A19R45	2100-1972		RESISTOR-TRMR 20K 10% HW SIDE-ADJ 20-TRN	0374D	3005P-1-203
A19R46	0698-0083		RESISTOR 1.96K 1% .125W F TC=0+-100	03298	C4-1/8-T0-1961-F
A19R47	0757-0444		RESISTOR 12.1K 1% .125W F TC=0+-100	03298	C4-1/8-T0-1212-F
A19R48	2100-1972		RESISTOR-TRMR 20K 10% HW SIDE-ADJ 20-TRN	0374D	3005P-1-203
A19R49	0698-0083		RESISTOR 1.96K 1% .125W F TC=0+-100	03298	C4-1/8-T0-1961-F
A19R50	0757-0443		RESISTOR 11K 1% .125W F TC=0+-100	03298	C4-1/8-T0-1102-F
A19R51	2100-1972		RESISTOR-TRMR 20K 10% HW SIDE-ADJ 20-TRN	0374D	3005P-1-203
A19R52	0698-8833		RESISTOR 10K .1% .125W F TC=0+-10	0227C	MAR6
A19R53	0698-8833		RESISTOR 10K .1% .125W F TC=0+-10	0227C	MAR6
A19R54	0698-8836	2	RESISTOR 3.7K .1% .125W F TC=0+-10	0227C	MAR6
A19R55	0698-8836		RESISTOR 3.7K .1% .125W F TC=0+-10	0227C	MAR6
A19R56	0757-0442		RESISTOR 10K 1% .125W F TC=0+-100	03298	C4-1/8-T0-1002-F
A19R57	0757-0290		RESISTOR 6.19K 1% .125W F TC=0+-100	0299E	MF4C1/8-T0-6191-F
A19R58	0698-3439		RESISTOR 178 1% .125W F TC=0+-100	03298	C4-1/8-T0-178R-F
A19R59	0811-3477	1	RESISTOR 25 1% 25W PW TC=0+-2	0185D	AL-25
A19S1	3101-1274		SWITCH-SL SPDT-NS SUBMIN 2A 120VAC PC	10389	23-021-008
A19U1	1826-0261		IC 741 OP AMP	28480	1826-0261
A19U2	1826-0261		IC 741 OP AMP	28480	1826-0261
A19U3	1826-0261		IC 741 OP AMP	28480	1826-0261
A19U4	1826-0261		IC 741 OP AMP	28480	1826-0261
A19U5	1826-0261		IC 741 OP AMP	28480	1826-0261
A19VR1	1902-0025		DIODE-ZNR 10V 5% DO-7 PD=.4W TC=+.06%	02230	FZ7260
A19VR2	1902-3203		DIODE-ZNR 14.7V 5% DO-7 PD=.4W TC=+.057%	02230	FZ7206
A19VR3	1902-0197	3	DIODE-ZNR 82.5V 5% DO-15 PD=1W TC=+.082%	28480	1902-0197
A19VR4	1902-0197		DIODE-ZNR 82.5V 5% DO-15 PD=1W TC=+.082%	28480	1902-0197
A20	08565-60023	1	ASSEMBLY, BIAS	28480	08565-60023
A20C1	0160-3879		CAPACITOR-FXD .01UF +-20% 100VDC CER	28480	0160-3879
A20C2	0160-3879		CAPACITOR-FXD .01UF +-20% 100VDC CER	28480	0160-3879
A20CR1	1901-0050		DIODE-SWITCHING 80V 200MA 2NS DO-7	28480	1901-0050
A20CR2	1901-0050		DIODE-SWITCHING 80V 200MA 2NS DO-7	28480	1901-0050
A20CR3	1901-0050		DIODE-SWITCHING 80V 200MA 2NS DO-7	28480	1901-0050
A20CR4	1901-0050		DIODE-SWITCHING 80V 200MA 2NS DO-7	28480	1901-0050
A20CR5	1901-0050		DIODE-SWITCHING 80V 200MA 2NS DO-7	28480	1901-0050
A20CR6	1901-0050		DIODE-SWITCHING 80V 200MA 2NS DO-7	28480	1901-0050
A20CR7			NOT ASSIGNED	28480	1826-0092
A20CR8			NOT ASSIGNED	28480	1826-0092
A20CR9			NOT ASSIGNED	28480	1826-0092
A20CR10			NOT ASSIGNED	28480	1826-0092
A20CR11	1901-0050		DIODE-SWITCHING 80V 200MA 2NS DO-7	28480	1901-0050
A20CR12	1901-0050		DIODE-SWITCHING 80V 200MA 2NS DO-7	28480	1901-0050
A20CR13	1901-0050		DIODE-SWITCHING 80V 200MA 2NS DO-7	28480	1901-0050
A20CR14	1901-0050		DIODE-SWITCHING 80V 200MA 2NS DO-7	28480	1901-0050
A20CR15	1901-0050		DIODE-SWITCHING 80V 200MA 2NS DO-7	28480	1901-0050
A20CR16	1901-0050		DIODE-SWITCHING 80V 200MA 2NS DO-7	28480	1901-0050
A20CR17			NOT ASSIGNED	28480	1826-0092
A20CR18			NOT ASSIGNED	28480	1826-0092
A20CR19	1901-0050		DIODE-SWITCHING 80V 200MA 2NS DO-7	28480	1901-0050
A20CR20	1901-0050		DIODE-SWITCHING 80V 200MA 2NS DO-7	28480	1901-0050
A20CR21	1901-0050		DIODE-SWITCHING 80V 200MA 2NS DO-7	28480	1901-0050
A20CR22	1901-0050		DIODE-SWITCHING 80V 200MA 2NS DO-7	28480	1901-0050
A20CR23	1901-0050		DIODE-SWITCHING 80V 200MA 2NS DO-7	28480	1901-0050
A20CR24	1901-0050		DIODE-SWITCHING 80V 200MA 2NS DO-7	28480	1901-0050
A20CR25	1901-0050		DIODE-SWITCHING 80V 200MA 2NS DO-7	28480	1901-0050

See introduction to this section for ordering information

Scans by ARTEK MEDIA =>

Table 6-2. Replaceable Parts

Reference Designation	HP Part Number	Qty	Description	Mfr Code	Mfr Part Number
A20CR26	1901-0050		DIODE-SWITCHING 80V 200MA 2NS DO-7	28480	1901-0050
A20CR27	1901-0050		DIODE-SWITCHING 80V 200MA 2NS DO-7	28480	1901-0050
A20CR28	1901-0050		DIODE-SWITCHING 80V 200MA 2NS DO-7	28480	1901-0050
A20MP1	0403-0026		GLIDE:NYLON	28480	0403-0026
A20MP2	1480-0073		PIN:DRIVE 0.250" LG	0000J	OBD
A20MP3	1480-0073		PIN:DRIVE 0.250" LG	0000J	OBD
A20MP4	4040-0756	1	EXTRACTOR-PC BOARD WHT POLYC	28480	4040-0756
A20MP5	4040-0748		EXTRACTOR-PC BOARD BLK POLYC	28480	4040-0748
A20MP6	08565-00059		SHIELD	28480	08565-00059
A20MP7	2360-0111	2	SCREW-MACH 6-32 .188-IN-LG PAN-HD-POZI	28480	2360-0111
A20MP8	2360-0111		SCREW-MACH 6-32 .188-IN-LG PAN-HD-POZI	28480	2360-0111
A20Q1	1854-0404		TRANSISTOR NPN SI TO-18 PD=360MW	28480	1854-0404
A20Q2	1854-0404		TRANSISTOR NPN SI TO-18 PD=360MW	28480	1854-0404
A20Q3	1855-0081	13	TRANSISTOR J-FET 2N5245 N-CHAN D-MODE SI	0169H	2N5245
A20Q4	1855-0081		TRANSISTOR J-FET 2N5245 N-CHAN D-MODE SI	0169H	2N5245
A20Q5	1855-0081		TRANSISTOR J-FET 2N5245 N-CHAN D-MODE SI	0169H	2N5245
A20Q6	1855-0081		TRANSISTOR J-FET 2N5245 N-CHAN D-MODE SI	0169H	2N5245
A20Q7	1855-0081		TRANSISTOR J-FET 2N5245 N-CHAN D-MODE SI	0169H	2N5245
A20Q8	1855-0081		TRANSISTOR J-FET 2N5245 N-CHAN D-MODE SI	0169H	2N5245
A20Q9	1854-0404		TRANSISTOR NPN SI TO-18 PD=360MW	28480	1854-0404
A20Q10	1854-0404		TRANSISTOR NPN SI TO-18 PD=360MW	28480	1854-0404
A20R1	2100-1972		RESISTOR-TRMR 20K 10% WW SIDE-ADJ 20-TRN	0374D	3005P-1-203
A20R2	2100-1972		RESISTOR-TRMR 20K 10% WW SIDE-ADJ 20-TRN	0374D	3005P-1-203
A20R3	2100-1739		RESISTOR-TRMR 5K 10% WW SIDE-ADJ 20-TRN	0374D	3005P-1-502
A20R4	0698-0083		RESISTOR 1.96K 1% .125W F TC=0+-100	0329B	C4-1/8-T0-1961-F
A20R5	2100-2851		RESISTOR-TRMR 2K 10% WW SIDE-ADJ 20-TRN	0374D	3005P-1-202
A20R6	2100-1739		RESISTOR-TRMR 5K 10% WW SIDE-ADJ 20-TRN	0374D	3005P-1-502
A20R7	2100-1972		RESISTOR-TRMR 20K 10% WW SIDE-ADJ 20-TRN	0374D	3005P-1-203
A20R8	2100-1972		RESISTOR-TRMR 20K 10% WW SIDE-ADJ 20-TRN	0374D	3005P-1-203
A20R9	2100-1972		RESISTOR-TRMR 20K 10% WW SIDE-ADJ 20-TRN	0374D	3005P-1-203
A20R10	2100-2850	3	RESISTOR-TRMR 10K 10% WW SIDE-ADJ 20-TRN	0374D	3005P-1-103
A20R11	2100-1972		RESISTOR-TRMR 20K 10% WW SIDE-ADJ 20-TRN	0374D	3005P-1-203
A20R12	2100-1972		RESISTOR-TRMR 20K 10% WW SIDE-ADJ 20-TRN	0374D	3005P-1-203
A20R13	2100-1972		RESISTOR-TRMR 20K 10% WW SIDE-ADJ 20-TRN	0374D	3005P-1-203
A20R14	2100-1972		RESISTOR-TRMR 20K 10% WW SIDE-ADJ 20-TRN	0374D	3005P-1-203
A20R15	2100-1972		RESISTOR-TRMR 20K 10% WW SIDE-ADJ 20-TRN	0374D	3005P-1-203
A20R16	2100-1972		RESISTOR-TRMR 20K 10% WW SIDE-ADJ 20-TRN	0374D	3005P-1-203
A20R17	2100-1972		RESISTOR-TRMR 20K 10% WW SIDE-ADJ 20-TRN	0374D	3005P-1-203
A20R18	2100-1972		RESISTOR-TRMR 20K 10% WW SIDE-ADJ 20-TRN	0374D	3005P-1-203
A20R19	2100-1972		RESISTOR-TRMR 20K 10% WW SIDE-ADJ 20-TRN	0374D	3005P-1-203
A20R20	2100-1972		RESISTOR-TRMR 20K 10% WW SIDE-ADJ 20-TRN	0374D	3005P-1-203
A20R21	2100-1972		RESISTOR-TRMR 20K 10% WW SIDE-ADJ 20-TRN	0374D	3005P-1-203
A20R22	2100-1972		RESISTOR-TRMR 20K 10% WW SIDE-ADJ 20-TRN	0374D	3005P-1-203
A20R23	0757-0442		RESISTOR 10K 1% .125W F TC=0+-100	0329B	C4-1/8-T0-1002-F
A20R24	0757-0442		RESISTOR 10K L% .125W F TC=0+-100	0329B	C4-1/8-T0-1002-F
A20R25	0698-3157		RESISTOR 19.6K 1% .125W F TC=0+-100	0329B	C4-1/8-T0-1962-F
A20R26	0698-3157		RESISTOR 19.6F 1% .125W F TC=0+-100	0329B	C4-1/8-T0-1962-F
A20R27	0757-0442		RESISTOR 10K 1% .125W F TC=0+-100	0329B	C4-1/8-T0-1002-F
A20R28	0757-0465		RESISTOR 100K 1% .125W F TC=0+-100	0329B	C4-1/8-T0-1003-F
A20R29	0757-0402	3	RESISTOR 110 1% .125W F TC=0+-100	0329B	C4-1/8-T0-111-F
A20R30	0757-0465		RESISTOR 100K 1% .125W F TC=0+-100	0329B	C4-1/8-T0-1003-F
A20R31	0757-0442		RESISTOR 10K 1% .125W F TC=0+-100	0329B	C4-1/8-T0-1002-F
A20R32	0757-0465		RESISTOR 100K 1% .125W F TC=0+-100	0329B	C4-1/8-T0-1003-F
A20R35	0698-3157		RESISTOR 19.6K 1% .125W F TC=0+-100	0329B	C4-1/8-T0-1962-F
A20R36	0698-3157		RESISTOR 19.6K 1% .125W F TC=0+-100	0329B	C4-1/8-T0-1962-F
A20R37	0698-3260		RESISTOR 464K 1% .125W F TC=0+-100	0160G	CC
A20R38	0698-3260		RESISTOR 464K 1% .125W F TC=0+-100	0160G	CC
A20R39	0757-0438		RESISTOR 5.11K 1% .125W F TC=0+-100	0329B	C4-1/8-T0-5111-F
A20R40	0757-0438		RESISTOR 5.11K 1% .125W F TC=0+-100	0329B	C4-1/8-T0-5111-F
A20R41	0698-3162		RESISTOR 46.4K 1% .125W F TC=0+-100	0329B	C4-1/8-T0-4642-F
A20R42	0698-3160		RESISTOR 31.6K 1% .125W F TC=0+-100	0329B	C4-1/8-T0-3162-F
A20R43	0698-3160		RESISTOR 31.6K 1% .125W F TC=0+-100	0329B	C4-1/8-T0-3162-F
A20R44	0698-3160		RESISTOR 31.6K 1% .125W F TC=0+-100	0329B	C4-1/8-T0-3162-F
A20R45	0698-3157		RESISTOR 19.6K 1% .125W F TC=0+-100	0329B	C4-1/8-T0-1962-F
A20R46	0698-3156		RESISTOR 14.7K 1% .125W F TC=0+-100	0329B	C4-1/8-T0-1472-F
A20R47	0698-3160		RESISTOR 31.6K 1% .125W F TC=0+-100	0329B	C4-1/8-T0-3162-F
A20R48	0698-3260		RESISTOR 464K 1% .125W F TC=0+-100	0160G	CC
A20R49	0757-0465		RESISTOR 100K 1% .125W F TC=0+-100	0329B	C4-1/8-T0-1003-F
A20R50	0698-3450		RESISTOR 42.2K 1% .125W F TC=0+-100	0329B	C4-1/8-T0-4222-F
A20R51	0698-3157		RESISTOR 19.6K 1% .125W F TC=0+-100	0329B	C4-1/8-T0-1962-F
A20R52	0757-0280		RESISTOR 1K 1% .125W F TC=0+-100	0329B	C4-1/8-T0-1001-F
A20R53	0698-3160		RESISTOR 31.6K 1% .125W F TC=0+-100	0329B	C4-1/8-T0-3162-F
A20R54	0698-3160		RESISTOR 31.6K 1% .125W F TC=0+-100	0329B	C4-1/8-T0-3162-F
A20R55	0698-3160		RESISTOR 31.6K 1% .125W F TC=0+-100	0329B	C4-1/8-T0-3162-F
A20R56	0757-0442		RESISTOR 10K 1% .125W F TC=0+-100	0329B	C4-1/8-T0-1002-F
A20R57	0698-3260		RESISTOR 464K 1% .125W F TC=0+-100	0160G	CC
A20R58	0757-0444		RESISTOR 12.1K 1% .125W F TC=0+-100	0329B	C4-1/8-T0-1212-F

See introduction to this section for ordering information

Scans by ARTEK MEDIA =>

Table 6-2. Replaceable Parts

Reference Designation	HP Part Number	Qty	Description	Mfr Code	Mfr Part Number
A20R59	0698-3160		RESISTOR 31.6K 1% .125W F TC=0+-100	03298	C4-1/8-T0-3162-F
A20R60	0757-0465		RESISTOR 100K 1% .125W F TC=0+-100	03298	C4-1/8-T0-1003-F
A20R61	0698-3260		RESISTOR 464K 1% .125W F TC=0+-100	0160G	CC
A20R62	0698-3160		RESISTOR 31.6K 1% .125W F TC=0+-100	03298	C4-1/8-T0-3162-F
A20R63	0698-3157		RESISTOR 19.6K 1% .125W F TC=0+-100	03298	C4-1/8-T0-1962-F
A20R64	0698-3160		RESISTOR 31.6K 1% .125W F TC=0+-100	03298	C4-1/8-T0-3162-F
A20R65	0698-3156		RESISTOR 14.7K 1% .125W F TC=0+-100	03298	C4-1/8-T0-1472-F
A20R66	0698-3260		RESISTOR 464K 1% .125W F TC=0+-100	0160G	CC
A20R67	0757-0465		RESISTOR 100K 1% .125W F TC=0+-100	03298	C4-1/8-T0-1003-F
A20R68	0698-3160		RESISTOR 31.6K 1% .125W F TC=0+-100	03298	C4-1/8-T0-3162-F
A20R69	0698-3157		RESISTOR 19.6K 1% .125W F TC=0+-100	03298	C4-1/8-T0-1962-F
A20R71	0698-3260		RESISTOR 464K 1% .125W F TC=0+-100	0160G	CC
A20R72	0757-0465		RESISTOR 100K 1% .125W F TC=0+-100	03298	C4-1/8-T0-1003-F
A20R73	0698-3160		RESISTOR 31.6K 1% .125W F TC=0+-100	03298	C4-1/8-T0-3162-F
A20R74	0757-0441		RESISTOR 8.25K 1% .125W F TC=0+-100	03298	C4-1/8-T0-8251-F
A20R75	0698-3160		RESISTOR 31.6K 1% .125W F TC=0+-100	03298	C4-1/8-T0-3162-F
A20R76	0698-3160		RESISTOR 31.6K 1% .125W F TC=0+-100	03298	C4-1/8-T0-3162-F
A20R77	0698-3160		RESISTOR 31.6K 1% .125W F TC=0+-100	03298	C4-1/8-T0-3162-F
A20R78	0698-3157		RESISTOR 19.6K 1% .125W F TC=0+-100	03298	C4-1/8-T0-1962-F
A20R79	0698-3260		RESISTOR 464K 1% .125W F TC=0+-100	0160G	CC
A20R80	0757-0465		RESISTOR 100K 1% .125W F TC=0+-100	03298	C4-1/8-T0-1003-F
A20R81	0698-3160		RESISTOR 31.6K 1% .125W F TC=0+-100	03298	C4-1/8-T0-3162-F
A20R82	0757-0458		RESISTOR 51.1K 1% .125W F TC=0+-100	03298	C4-1/8-T0-5112-F
A20R83	0757-0458		RESISTOR 51.1K 1% .125W F TC=0+-100	03298	C4-1/8-T0-5112-F
A20R84	0757-0458		RESISTOR 51.1K 1% .125W F TC=0+-100	03298	C4-1/8-T0-5112-F
A20R85	0757-0441		RESISTOR 8.25K 1% .125W F TC=0+-100	03298	C4-1/8-T0-8251-F
A20R86	0757-0444		RESISTOR 12.1K 1% .125W F TC=0+-100	03298	C4-1/8-T0-1212-F
A20R87	0698-3157		RESISTOR 19.6K 1% .125W F TC=0+-100	03298	C4-1/8-T0-1962-F
A20R88	0698-3260		RESISTOR 464K 1% .125W F TC=0+-100	0160G	CC
A20R89	0757-0465		RESISTOR 100K 1% .125W F TC=0+-100	03298	C4-1/8-T0-1003-F
A20R90	0757-0442		RESISTOR 10K 1% .125W F TC=0+-100	03298	C4-1/8-T0-1002-F
A20R91	0698-3160		RESISTOR 31.6K 1% .125W F TC=0+-100	03298	C4-1/8-T0-3162-F
A20R92	0757-0401		RESISTOR 100 1% .125W F TC=0+-100	03298	C4-1/8-T0-101-F
A20R93	0757-0442		RESISTOR 10K 1% .125W F TC=0+-100	03298	C4-1/8-T0-1002-F
A20R94	0757-0465		RESISTOR 100K 1% .125W F TC=0+-100	03298	C4-1/8-T0-1003-F
A20R95	0698-3431		RESISTOR 23.7 1% .125W F TC=0+-100	03888	PME55-1/8-T0-23R7-F
A20R96	0757-0442		RESISTOR 10K 1% .125W F TC=0+-100	03298	C4-1/8-T0-1002-F
A20R97	0757-0465		RESISTOR 100K 1% .125W F TC=0+-100	03298	C4-1/8-T0-1003-F
A20R98	0757-0441		RESISTOR 8.25K 1% .125W F TC=0+-100	03298	C4-1/8-T0-8251-F
A20R99	0698-3160		RESISTOR 31.6K 1% .125W F TC=0+-100	03298	C4-1/8-T0-3162-F
A20R100	2100-1972		RESISTOR-TRMR 20K 10% WW SIDE-ADJ 20-TRN	034D	3005P-1-203
A20R101	0757-0465		RESISTOR 100K 1% .125W F TC=0+-100	03298	C4-1/8-T0-1003-F
A20U1	1826-0092		IC OP AMP	28480	1826-0092
A20U2	1826-0092		IC OP AMP	28480	1826-0092
A20U3	1826-0092		IC OP AMP	28480	1826-0092
A20U4	1826-0092		IC OP AMP	28480	1826-0092
A20U5	1826-0092		IC OP AMP	28480	1826-0092
A20U6	1826-0092		IC OP AMP	28480	1826-0092
A20U7	1826-0092		IC OP AMP	28480	1826-0092
A20U8	1826-0092		IC OP AMP	28480	1826-0092
A20VR1	1902-3094	6	DIODE-ZNR 5.11V 2% DO-7 PD=.4W TC=-.009%	02203G	BZ 10939-99
A20VR2	1902-3139	1	DIODE-ZNR 8.25V 5% DO-7 PD=.4W TC=+.053%	02223G	F27252
A20VR3	1902-3049	4	DIODE-ZNR 3.48V 2% DO-7 PD=.4W TC=-.058%	02203G	BZ 10939-51
A20VR4	1902-3049		DIODE-ZNR 3.48V 2% DO-7 PD=.4W TC=-.058%	02203G	BZ 10939-51
A20VR5	1902-3049		DIODE-ZNR 3.48V 2% DO-7 PD=.4W TC=-.058%	02203G	BZ 10939-51
A20VR6	1902-3094		DIODE-ZNR 5.11V 2% DO-7 PD=.4W TC=-.009%	02203G	BZ 10939-99
A20VR7	1902-3094		DIODE-ZNR 5.11V 2% DO-7 PD=.4W TC=-.009%	02203G	BZ 10939-99
A20VR8	1902-3094		DIODE-ZNR 5.11V 2% DO-7 PD=.4W TC=-.009%	02203G	BZ 10939-99
A20VR9	1902-3094		DIODE-ZNR 5.11V 2% DO-7 PD=.4W TC=-.009%	02203G	BZ 10939-99
A20VR10	1902-3094		DIODE-ZNR 5.11V 2% DO-7 PD=.4W TC=-.009%	02203G	BZ 10939-99
A20VR11	1902-3049		DIODE-ZNR 3.48V 2% DO-7 PD=.4W TC=-.058%	02203G	BZ 10939-51
A21	08565-60024	1	ASSEMBLY, VIDEO	28480	08565-60024
A21C1	0180-2205		CAPACITOR-FXD .33UF+-10% 35VDC TA	0420J	150D334X9035A2
A21C2	0180-2743	1	CAPACITOR-FXD .11UF+-10% 35VDC TA	28480	0180-2743
A21C3	0160-0163		CAPACITOR-FXD .033UF +-10% 200VDC POLYE	0420J	292P33392
A21C4	0160-2151	1	CAPACITOR-FXD .011UF +-5% 200VDC POLYE	28480	0160-2151
A21C5	0160-0155		CAPACITOR-FXD 3300PF +-10% 200VDC POLYE	0420J	292P33292
A21C6	0160-2218	1	CAPACITOR-FXD 1000PF +-5% 300VDC	28480	0160-2218
A21C7	0160-0134	1	CAPACITOR-FXD 220PF +-5% 300VDC MICA0+70	28480	0160-0134
A21C8	0180-0291		CAPACITOR-FXD 1UF+-10% 35VDC TA	0420J	150D105X9035A2
A21C9	0160-2055		CAPACITOR-FXD .01UF +80-20% 100VDC CER	28480	0160-2055
A21C10	0180-1743		CAPACITOR-FXD .1UF+-10% 35VDC TA	0420J	150D104X9035A2

See introduction to this section for ordering information

Scans by ARTEK MEDIA =>

Table 6-2. Replaceable Parts

Reference Designation	HP Part Number	Qty	Description	Mfr Code	Mfr Part Number
A21C11	0160-2254	2	CAPACITOR-FXD 7.5PF +-.25PF 500VDC	28480	0160-2254
A21C12	0180-0374		CAPACITOR-FXD 10UF+-10% 20VDC TA	0420J	150D106X9020B2
A21C13	0180-0374		CAPACITOR-FXD 10UF+-10% 20VDC TA	0420J	150D106X9020B2
A21C14	0180-0197		CAPACITOR-FXD 2.2UF+-10% 20VDC TA	0420J	150D225X9020A2
A21C15	0180-0197		CAPACITOR-FXD 2.2UF+-10% 20VDC TA	0420J	150D225X9020A2
A21C16	0160-2150		CAPACITOR-FXD 33PF +-5% 300VDC	28480	0160-2150
A21C17	0160-2254		CAPACITOR-FXD 7.5PF +-.25PF 500VDC	28480	0160-2254
A21CR1	1901-0050		DIODE-SWITCHING 80V 200MA 2NS DO-7	28480	1901-0050
A21CR2	1901-0050		DIODE-SWITCHING 80V 200MA 2NS DO-7	28480	1901-0050
A21CR3	1901-0050		DIODE-SWITCHING 80V 200MA 2NS DO-7	28480	1901-0050
A21CR4	1901-0050		DIODE-SWITCHING 80V 200MA 2NS DO-7	28480	1901-0050
A21CR5	1901-0050		DIODE-SWITCHING 80V 200MA 2NS DO-7	28480	1901-0050
A21CR6	1901-0050		DIODE-SWITCHING 80V 200MA 2NS DO-7	28480	1901-0050
A21CR7	1901-0050		DIODE-SWITCHING 80V 200MA 2NS DO-7	28480	1901-0050
A21CR8	1901-0050		DIODE-SWITCHING 80V 200MA 2NS DO-7	28480	1901-0050
A21CR9	1901-0050		DIODE-SWITCHING 80V 200MA 2NS DO-7	28480	1901-0050
A21CR10	1901-0050		DIODE-SWITCHING 80V 200MA 2NS DO-7	28480	1901-0050
A21CR11	1901-0050		DIODE-SWITCHING 80V 200MA 2NS DO-7	28480	1901-0050
A21CR12	1901-0050		DIODE-SWITCHING 80V 200MA 2NS DO-7	28480	1901-0050
A21CR13	1901-0050		DIODE-SWITCHING 80V 200MA 2NS DO-7	28480	1901-0050
A21CR14	1901-0050		DIODE-SWITCHING 80V 200MA 2NS DO-7	28480	1901-0050
A21CR15	1901-0050		DIODE-SWITCHING 80V 200MA 2NS DO-7	28480	1901-0050
A21CR16	1901-0050		DIODE-SWITCHING 80V 200MA 2NS DO-7	28480	1901-0050
A21CR17	1901-0050		DIODE-SWITCHING 80V 200MA 2NS DO-7	28480	1901-0050
A21CR18	1901-0050		DIODE-SWITCHING 80V 200MA 2NS DO-7	28480	1901-0050
A21CR19	1901-0050		DIODE-SWITCHING 80V 200MA 2NS DO-7	28480	1901-0050
A21CR20	1901-0050		DIODE-SWITCHING 80V 200MA 2NS DO-7	28480	1901-0050
A21CR21			NOT ASSIGNED		
A21CR22	1901-0050		DIODE-SWITCHING 80V 200MA 2NS DO-7	28480	1901-0050
A21CR23	1901-0050		DIODE-SWITCHING 80V 200MA 2NS DO-7	28480	1901-0050
A21CR24	1901-0050		DIODE-SWITCHING 80V 200MA 2NS DO-7	28480	1901-0050
A21CR25	1901-0050		DIODE-SWITCHING 80V 200MA 2NS DO-7	28480	1901-0050
A21CR26 THRU CR28			NOT ASSIGNED		
A21CR29	1901-0050		DIODE-SWITCHING 80V 200MA 2NS DO-7	28480	1901-0050
A21CR30	1901-0050		DIODE-SWITCHING 80V 200MA 2NS DO-7	28480	1901-0050
A21CR31	1901-0050		DIODE-SWITCHING 80V 200MA 2NS DO-7	28480	1901-0050
A21CR32	1901-0050		DIODE-SWITCHING 80V 200MA 2NS DO-7	28480	1901-0050
A21CR33	1901-0050		DIODE-SWITCHING 80V 200MA 2NS DO-7	28480	1901-0050
A21CR34	1901-0179	2	DIODE-SWITCHING 15V 50MA 750PS DO-7	28480	1901-0179
A21CR35	1901-0179		DIODE-SWITCHING 15V 50MA 750PS DO-7	28480	1901-0179
A21CR36	1901-0050		DIODE-SWITCHING 80V 200MA 2NS DO-7	28480	1901-0050
A21L1	9140-0210		COIL-MLD 100UH 5% Q=50 .155DX.375LG	02178	15-1315-12J
A21L2	9140-0210		COIL-MLD 100UH 5% Q=50 .155DX.375LG	02178	15-1315-12J
A21L3	9140-0114	5	COIL-MLD 10UH 10% Q=55 .155DX.375LG	02178	15-4445-2K
A21MP1	1480-0073		PIN:DRIVE 0.250" LG	0000J	08D
A21MP2	1480-0073		PIN:DRIVE 0.250" LG	0000J	08D
A21MP3	4040-0750		EXTRACTOR-PC BOARD RED POLYC	28480	4040-0750
A21MP4	4040-0749		EXTRACTOR-PC BOARD BRN POLYC	28480	4040-0749
A21Q1	1855-0020		TRANSISTOR J-FET N-CHAN D-MODE TO-18 SI	28480	1855-0020
A21Q2	1854-0404		TRANSISTOR NPN SI TO-18 PD=360MW	28480	1854-0404
A21Q3	1854-0404		TRANSISTOR NPN SI TO-18 PD=360MW	28480	1854-0404
A21Q4	1854-0404		TRANSISTOR NPN SI TO-18 PD=360MW	28480	1854-0404
A21Q5	1854-0404		TRANSISTOR NPN SI TO-18 PD=360MW	28480	1854-0404
A21Q6	1854-0404		TRANSISTOR NPN SI TO-18 PD=360MW	28480	1854-0404
A21Q7	1854-0404		TRANSISTOR NPN SI TO-18 PD=360MW	28480	1854-0404
A21Q8	1854-0404		TRANSISTOR NPN SI TO-18 PD=360MW	28480	1854-0404
A21Q9	1854-0404		TRANSISTOR NPN SI TO-18 PD=360MW	28480	1854-0404
A21Q10	1854-0404		TRANSISTOR NPN SI TO-18 PD=360MW	28480	1854-0404
A21Q11	1854-0404		TRANSISTOR NPN SI TO-18 PD=360MW	28480	1854-0404
A21Q12	1855-0020		TRANSISTOR J-FET N-CHAN D-MODE TO-18 SI	28480	1855-0020
A21Q13	1854-0404		TRANSISTOR NPN SI TO-18 PD=360MW	28480	1854-0404
A21Q14	1854-0404		TRANSISTOR NPN SI TO-18 PD=360MW	28480	1854-0404
A21Q15	1853-0281		TRANSISTOR PNP 2N2907A SI TO-18 PD=400MW	02203G	2N2907A
A21Q16	1854-0404		TRANSISTOR NPN SI TO-18 PD=360MW	28480	1854-0404
A21Q17	1855-0020		TRANSISTOR J-FET N-CHAN D-MODE TO-18 SI	28480	1855-0020
A21Q18	1854-0404		TRANSISTOR NPN SI TO-18 PD=360MW	28480	1854-0404
A21Q19	1854-0404		TRANSISTOR NPN SI TO-18 PD=360MW	28480	1854-0404
A21Q20	1854-0404		TRANSISTOR NPN SI TO-18 PD=360MW	28480	1854-0404
A21Q21	1854-0404		TRANSISTOR NPN SI TO-18 PD=360MW	28480	1854-0404
A21Q22	1854-0404		TRANSISTOR NPN SI TO-18 PD=360MW	28480	1854-0404
A21Q23	1855-0020		TRANSISTOR J-FET N-CHAN D-MODE TO-18 SI	28480	1855-0020
A21Q24	1854-0404		TRANSISTOR NPN SI TO-18 PD=360MW	28480	1854-0404
A21Q25	1854-0404		TRANSISTOR NPN SI TO-18 PD=360MW	28480	1854-0404
A21Q26	1854-0404		TRANSISTOR NPN SI TO-18 PD=360MW	28480	1854-0404
A21Q27	1854-0404		TRANSISTOR NPN SI TO-18 PD=360MW	28480	1854-0404
A21Q28	1854-0404		TRANSISTOR NPN SI TO-18 PD=360MW	28480	1854-0404
A21Q29	1854-0404		TRANSISTOR NPN SI TO-18 PD=360MW	28480	1854-0404
A21Q30	1855-0020		TRANSISTOR J-FET N-CHAN D-MODE TO-18 SI	28480	1855-0020

See introduction to this section for ordering information

Scans by ARTEK MEDIA =>

Table 6-2. Replaceable Parts

Reference Designation	HP Part Number	Qty	Description	Mfr Code	Mfr Part Number
A21Q31	1854-0404		TRANSISTOR NPN SI TO-18 PD=360MW	28480	1854-0404
A21Q32	1854-0404		TRANSISTOR NPN SI TO-18 PD=360MW	28480	1854-0404
A21Q33	1854-0404		TRANSISTOR NPN SI TO-18 PD=360MW	28480	1854-0404
A21Q34	1854-0404		TRANSISTOR NPN SI TO-18 PD=360MW	28480	1854-0404
A21Q35	1854-0404		TRANSISTOR NPN SI TO-18 PD=360MW	28480	1854-0404
A21Q36	1854-0404		TRANSISTOR NPN SI TO-18 PD=360MW	28480	1854-0404
A21Q37	1855-0020		TRANSISTOR J-FET N-CHAN D-MODE TO-18 SI	28480	1855-0020
A21Q38	1854-0404		TRANSISTOR NPN SI TO-18 PD=360MW	28480	1854-0404
A21Q39	1854-0404		TRANSISTOR NPN SI TO-18 PD=360MW	28480	1854-0404
A21Q40	1854-0404		TRANSISTOR NPN SI TO-18 PD=360MW	28480	1854-0404
A21Q41	1854-0404		TRANSISTOR NPN SI TO-18 PD=360MW	28480	1854-0404
A21Q42	1854-0404		TRANSISTOR NPN SI TO-18 PD=360MW	28480	1854-0404
A21Q43	1855-0050	2	TRANSISTOR-JFET DUAL N-CHAN D-MODE SI	28480	1855-0050
A21Q44	1853-0007		TRANSISTOR PNP 2N3251 SI TO-18 PD=360MW	02030	2N3251
A21Q45	1853-0007		TRANSISTOR PNP 2N3251 SI TO-18 PD=360MW	02030	2N3251
A21Q46	1853-0007		TRANSISTOR PNP 2N3251 SI TO-18 PD=360MW	02030	2N3251
A21Q47	1854-0404		TRANSISTOR NPN SI TO-18 PD=360MW	28480	1854-0404
A21Q48	1854-0404		TRANSISTOR NPN SI TO-18 PD=360MW	28480	1854-0404
A21Q49	1854-0404		TRANSISTOR NPN SI TO-18 PD=360MW	28480	1854-0404
A21Q50	1855-0050		TRANSISTOR-JFET DUAL N-CHAN D-MODE SI	28480	1855-0050
A21Q51	1853-0007		TRANSISTOR PNP 2N3251 SI TO-18 PD=360MW	02030	2N3251
A21Q52	1853-0007		TRANSISTOR PNP 2N3251 SI TO-18 PD=360MW	02030	2N3251
A21Q53	1853-0007		TRANSISTOR PNP 2N3251 SI TO-18 PD=360MW	02030	2N3251
A21Q54	1854-0404		TRANSISTOR NPN SI TO-18 PD=360MW	28480	1854-0404
A21R1	0757-0199		RESISTOR 21.5K 1% .125W F TC=0+-100	03298	C4-1/8-T0-2152-F
A21R2	0757-0199		RESISTOR 21.5K 1% .125W F TC=0+-100	03298	C4-1/8-T0-2152-F
A21R3	0757-0199		RESISTOR 21.5K 1% .125W F TC=0+-100	03298	C4-1/8-T0-2152-F
A21R4	0757-0465		RESISTOR 100K 1% .125W F TC=0+-100	03298	C4-1/8-T0-1003-F
A21R5 THRU A21R10			NOT ASSIGNED		
A21R11	0757-1094		RESISTOR 1.47K 1% .125W F TC=0+-100	03298	C4-1/8-T0-1471-F
A21R12	0757-0199		RESISTOR 21.5K 1% .125W F TC=0+-100	03298	C4-1/8-T0-2152-F
A21R13	0757-0199		RESISTOR 21.5K 1% .125W F TC=0+-100	03298	C4-1/8-T0-2152-F
A21R14	0757-0199		RESISTOR 21.5K 1% .125W F TC=0+-100	03298	C4-1/8-T0-2152-F
A21R15	0757-0465		RESISTOR 100K 1% .125W F TC=0+-100	03298	C4-1/8-T0-1003-F
A21R16	0757-0274		RESISTOR 1.21K 1% .125W F TC=0+-100	03298	C4-1/8-T0-1213-F
A21R17	0698-3155		RESISTOR 4.64K 1% .125W F TC=0+-100	03298	C4-1/8-T0-4641-F
A21R18	0757-0199		RESISTOR 21.5K 1% .125W F TC=0+-100	03298	C4-1/8-T0-2152-F
A21R19	0757-0199		RESISTOR 21.5K 1% .125W F TC=0+-100	03298	C4-1/8-T0-2152-F
A21R20	0757-0199		RESISTOR 21.5K 1% .125W F TC=0+-100	03298	C4-1/8-T0-2152-F
A21R21	0757-0465		RESISTOR 100K 1% .125W F TC=0+-100	03298	C4-1/8-T0-1003-F
A21R22	0698-3154		RESISTOR 4.22K 1% .125W F TC=0+-100	03298	C4-1/8-T0-4221-F
A21R23	0757-0447		RESISTOR 16.2K 1% .125W F TC=0+-100	03298	C4-1/8-T0-1622-F
A21R24	0757-0199		RESISTOR 21.5K 1% .125W F TC=0+-100	03298	C4-1/8-T0-2152-F
A21R25	0757-0199		RESISTOR 21.5K 1% .125W F TC=0+-100	03298	C4-1/8-T0-2152-F
A21R26	0757-0199		RESISTOR 21.5K 1% .125W F TC=0+-100	03298	C4-1/8-T0-2152-F
A21R27	0757-0465		RESISTOR 100K 1% .125W F TC=0+-100	03298	C4-1/8-T0-1003-F
A21R28	0757-0442		RESISTOR 10K 1% .125W F TC=0+-100	03298	C4-1/8-T0-1002-F
A21R29	0698-3162		RESISTOR 46.4K 1% .125W F TC=0+-100	03298	C4-1/8-T0-4642-F
A21R30	0757-0199		RESISTOR 21.5K 1% .125W F TC=0+-100	03298	C4-1/8-T0-2152-F
A21R31	0757-0199		RESISTOR 21.5K 1% .125W F TC=0+-100	03298	C4-1/8-T0-2152-F
A21R32	0757-0199		RESISTOR 21.5K 1% .125W F TC=0+-100	03298	C4-1/8-T0-2152-F
A21R33	0757-0465		RESISTOR 100K 1% .125W F TC=0+-100	03298	C4-1/8-T0-1003-F
A21R34	0698-3158		RESISTOR 23.7K 1% .125W F TC=0+-100	03298	C4-1/8-T0-2372-F
A21R35	0757-0470	5	RESISTOR 162K 1% .125W F TC=0+-100	03298	C4-1/8-T0-1623-F
A21R36	0757-0199		RESISTOR 21.5K 1% .125W F TC=0+-100	03298	C4-1/8-T0-2152-F
A21R37	0757-0199		RESISTOR 21.5K 1% .125W F TC=0+-100	03298	C4-1/8-T0-2152-F
A21R38			NOT ASSIGNED		
A21R39	0757-0465		RESISTOR 100K 1% .125W F TC=0+-100	0329B	C4-1/8-TO-1003-F
A21R40	0698-3453		RESISTOR 196K 1% .125W F TC=0+-100	0329B	C4-1/8-TO-1963-F
A21R41	0757-0422		RESISTOR 909 1% .125W F TC=0+-100	0329B	C4-1/8-TO-909R-F
A21R42	0698-0085		RESISTOR 2.61K 1% .125W F TC=0+-100	03298	C4-1/8-T0-2611-F
A21R43	0757-0422		RESISTOR 909 1% .125W F TC=0+-100	03298	C4-1/8-T0-909R-F
A21R44	0757-0279		RESISTOR 3.16K 1% .125W F TC=0+-100	03298	C4-1/8-T0-3161-F
A21R45	0757-0438		RESISTOR 5.11K 1% .125W F TC=0+-100	03298	C4-1/8-T0-5111-F
A21R46	0757-0199		RESISTOR 21.5K 1% .125W F TC=0+-100	03298	C4-1/8-T0-2152-F
A21R47	0757-0280		RESISTOR 1K 1% .125W F TC=0+-100	03298	C4-1/8-T0-1001-F
A21R48	0757-0444		RESISTOR 12.1K 1% .125W F TC=0+-100	03298	C4-1/8-T0-1212-F
A21R49	0698-0085		RESISTOR 2.61K 1% .125W F TC=0+-100	03298	C4-1/8-T0-2611-F
A21R50	0757-0199		RESISTOR 21.5K 1% .125W F TC=0+-100	03298	C4-1/8-T0-2152-F
A21R51	0757-0199		RESISTOR 21.5K 1% .125W F TC=0+-100	03298	C4-1/8-T0-2152-F
A21R52	2100-2850		RESISTOR-TRMR 10K 10% WW SIDE-ADJ 20-TRN	0374D	3009P-1-103
A21R53	0757-0199		RESISTOR 21.5K 1% .125W F TC=0+-100	03298	C4-1/8-T0-2152-F
A21R54	0757-0199		RESISTOR 21.5K 1% .125W F TC=0+-100	03298	C4-1/8-T0-2152-F
A21R55	2100-3054		RESISTOR-TRMR 50K 10% C SIDE-ADJ 17-TRN	73138	89PR50K
A21R56	0757-0199		RESISTOR 21.5K 1% .125W F TC=0+-100	03298	C4-1/8-T0-2152-F

See introduction to this section for ordering information

Scans by ARTEK MEDIA =>

Table 6-2. Replaceable Parts

Reference Designation	HP Part Number	Qty	Description	Mfr Code	Mfr Part Number
A21R57	0757-0199		RESISTOR 21.5K 1% .125W F TC=0+-100	0329B	C4-1/8-T0-2152-F
A21R58	2100-3094	4	RESISTOR-TRMR 100K 10% C SIDE-ADJ 17-TRN	73138	89PR100K
A21R59	0757-0199		RESISTOR 21.5K 1% .125W F TC=0+-100	0329B	C4-1/8-T0-2152-F
A21R60	0757-0199		RESISTOR 21.5K 1% .125W F TC=0+-100	0329B	C4-1/8-T0-2152-F
A21R61	0757-0199		RESISTOR 21.5K 1% .125W F TC=0+-100	0329B	C4-1/8-T0-2152-F
A21R62	0757-0199		RESISTOR 21.5K 1% .125W F TC=0+-100	0329B	C4-1/8-T0-2152-F
A21R63	0757-0199		RESISTOR 21.5K 1% .125W F TC=0+-100	0329B	C4-1/8-T0-2152-F
A21R64	0698-0088		RESISTOR 2.61K 1% .125W F TC=0+-100	0329B	C4-1/8-T0-2611-F
A21R65	0757-0199		RESISTOR 21.5K 1% .125W F TC=0+-100	0329B	C4-1/8-T0-2152-F
A21R66	0757-0199		RESISTOR 21.5K 1% .125W F TC=0+-100	0329B	C4-1/8-T0-2152-F
A21R67	0698-7794	4	RESISTOR 10K .25% .125W F TC=0+-100	0299E	MF4C1/8-T0-1002-C
A21R68	0757-0442		RESISTOR 10K 1% .125W F TC=0+-100	0329B	C4-1/8-T0-1002-F
A21R69	0698-3152		RESISTOR 3.48K 1% .125W F TC=0+-100	0329B	C4-1/8-T0-3481-F
A21R70	0757-0199		RESISTOR 21.5K 1% .125W F TC=0+-100	0329B	C4-1/8-T0-2152-F
A21R71	2100-3094		RESISTOR-TRMR 100K 10% C SIDE-ADJ 17-TRN	73138	89PR100K
A21R72	0698-7421		RESISTOR 40K .25% .125W F TC=0+-100	0299E	MF4C1/8-T0-4002-C
A21R73	0757-0199		RESISTOR 21.5K 1% .125W F TC=0+-100	0329B	C4-1/8-T0-2152-F
A21R74	2100-3054		RESISTOR-TRMR 50K 10% C SIDE-ADJ 17-TRN	73138	89PR50K
A21R75	0698-3194		RESISTOR 20K .25% .125W F TC=0+-50	03888	PME55-1/8-T2-2002-C
A21R76	0757-0199		RESISTOR 21.5K 1% .125W F TC=0+-100	0329B	C4-1/8-T0-2152-F
A21R77	2100-2850		RESISTOR-TRMR 10K 10% WW SIDE-ADJ 20-TRN	03740	3005P-1-103
A21R78	0698-7412	1	RESISTOR 13.3K .25% .125W F TC=0+-100	0299E	MF4C1/8-T0-1332-C
A21R79	0757-0199		RESISTOR 21.5K 1% .125W F TC=0+-100	0329B	C4-1/8-T0-2152-F
A21R80	0757-0199		RESISTOR 21.5K 1% .125W F TC=0+-100	0329B	C4-1/8-T0-2152-F
A21R81	0757-0442		RESISTOR 10K 1% .125W F TC=0+-100	0329B	C4-1/8-T0-1002-F
A21R82	0757-0280		RESISTOR 1K 1% .125W F TC=0+-100	0329B	C4-1/8-T0-1001-F
A21R83	0757-0442		RESISTOR 10K 1% .125W F TC=0+-100	0329B	C4-1/8-T0-1002-F
A21R84	0698-3447	8	RESISTOR 422 1% .125W F TC=0+-100	0329B	C4-1/8-T0-422R-F
A21R85	0757-0442		RESISTOR 10K 1% .125W F TC=0+-100	0329B	C4-1/8-T0-1002-F
A21R86	0698-0084		RESISTOR 2.15K 1% .125W F TC=0+-100	0329B	C4-1/8-T0-2151-F
A21R87	0698-3447		RESISTOR 422 1% .125W F TC=0+-100	0329B	C4-1/8-T0-422R-F
A21R88	0757-0444		RESISTOR 12.1K 1% .125W F TC=0+-100	0329B	C4-1/8-T0-1212-F
A21R89	0698-0083		RESISTOR 1.96K 1% .125W F TC=0+-100	0329B	C4-1/8-T0-1961-F
A21R90	0698-0083		RESISTOR 1.96K 1% .125W F TC=0+-100	0329B	C4-1/8-T0-1961-F
A21R91	0698-3156		RESISTOR 14.7K 1% .125W F TC=0+-100	0329B	C4-1/8-T0-1472-F
A21R92	2100-2851		RESISTOR-TRMR 2K 10% WW SIDE-ADJ 20-TRN	03740	3005P-1-202
A21R93	0698-4055	1	RESISTOR 1K .25% .125W F TC=0+-100	03888	PME55-1/8-T0-1001-C
A21R94	0757-0199		RESISTOR 21.5K 1% .125W F TC=0+-100	0329B	C4-1/8-T0-2152-F
A21R95	0698-8860	1	RESISTOR 7.52K .25% .125W F TC=0+-100	0107D	H8
A21R96	0698-8869	1	RESISTOR 2.15K .25% .125W F TC=0+-100	0107D	H8
A21R97	0757-0199		RESISTOR 21.5K 1% .125W F TC=0+-100	0329B	C4-1/8-T0-2152-F
A21R98	0757-0199		RESISTOR 21.5K 1% .125W F TC=0+-100	0329B	C4-1/8-T0-2152-F
A21R99	0698-8873	1	RESISTOR 232 .25% .125W F TC=0+-100	0107D	H8
A21R100	0757-0199		RESISTOR 21.5K 1% .125W F TC=0+-100	0329B	C4-1/8-T0-2152-F
A21R101	0757-0199		RESISTOR 21.5K 1% .125W F TC=0+-100	0329B	C4-1/8-T0-2152-F
A21R102	0698-8872	1	RESISTOR 532 .25% .125W F TC=0+-100	0107D	H8
A21R103	0757-0199		RESISTOR 21.5K 1% .125W F TC=0+-100	0329B	C4-1/8-T0-2152-F
A21R104	0757-0199		RESISTOR 21.5K 1% .125W F TC=0+-100	0329B	C4-1/8-T0-2152-F
A21R105	0698-8870	1	RESISTOR 2.143K .25% .125W F TC=0+-100	0107D	H8
A21R106	0757-0442		RESISTOR 10K 1% .125W F TC=0+-100	0329B	C4-1/8-T0-1002-F
A21R107	0757-0442		RESISTOR 10K 1% .125W F TC=0+-100	0329B	C4-1/8-T0-1002-F
A21R108	0698-3447		RESISTOR 422 1% .125W F TC=0+-100	0329B	C4-1/8-T0-422R-F
A21R109	0757-0442		RESISTOR 10K 1% .125W F TC=0+-100	0329B	C4-1/8-T0-1002-F
A21R110	0757-0817	1	RESISTOR 750 1% .5W F TC=0+-100	0299E	MF7C1/2-T0-751-F
A21R111	0757-0279		RESISTOR 3.16K 1% .125W F TC=0+-100	0329B	C4-1/8-T0-3161-F
A21R112	0757-0442		RESISTOR 10K 1% .125W F TC=0+-100	0329B	C4-1/8-T0-1002-F
A21R113	0757-0440		RESISTOR 7.5K 1% .125W F TC=0+-100	0329B	C4-1/8-T0-7501-F
A21R114	0698-6721	1	RESISTOR 19K 1% .125W F TC=0+-25	03298	NE55
A21R115	0698-4482		RESISTOR 17.4K 1% .125W F TC=0+-100	0329B	C4-1/8-T0-1742-F
A21R116	0757-0416		RESISTOR 511 1% .125W F TC=0+-100	0329B	C4-1/8-T0-511R-F
A21R117	0757-0280		RESISTOR 1K 1% .125W F TC=0+-100	0329B	C4-1/8-T0-1001-F
A21R118	0698-3440	12	RESISTOR 196 1% .125W F TC=0+-100	0329B	C4-1/8-T0-196R-F
A21R119	0757-0394		RESISTOR 51.1 1% .125W F TC=0+-100	0329B	C4-1/8-T0-51R1-F
A21R120	0698-3440		RESISTOR 196 1% .125W F TC=0+-100	0329B	C4-1/8-T0-196R-F
A21R121	0698-3440		RESISTOR 196 1% .125W F TC=0+-100	0329B	C4-1/8-T0-196R-F
A21R122	0757-0199		RESISTOR 21.5K 1% .125W F TC=0+-100	0329B	C4-1/8-T0-2152-F
A21R123	0698-3260		RESISTOR 464K 1% .125W F TC=0+-100	0160G	CC
A21R124	0698-3260		RESISTOR 464K 1% .125W F TC=0+-100	0160G	CC
A21S1	3101-1274		SWITCH-SL SPDT-N8 SUBMIN 2A 120VAC PC	10389	23-021-008
A21VR1	1902-0025		DIODE-ZNR 10V 5% DO-7 PD=.4W TC=+.06%	0223G	FZ7260
A21VR2	1902-0064		DIODE-ZNR 7.5V 5% DO-7 PD=.4W TC=+.05%	0223G	FZ7248
A21VR3	1902-3171		DIODE-ZNR 11V 5% DO-7 PD=.4W TC=+.062%	0223G	FZ7264
A21VR4	1902-3182		DIODE-ZNR 12.1V 5% DO-7 PD=.4W TC=+.064%	0223G	FZ7268

See introduction to this section for ordering information

Scans by ARTEK MEDIA =>

Table 6-2. Replaceable Parts

Reference Designation	HP Part Number	Qty	Description	Mfr Code	Mfr Part Number
A22	08558-60014	1	ASSEMBLY, LOG AMPLIFIER	28480	08558-60014
A22C1	0160-2055		CAPACITOR-FXD .01UF +80-20% 100VDC CER	28480	0160-2055
A22C2	0160-3459	11	CAPACITOR-FXD .02UF +-20% 100VDC CER	28480	0160-3459
A22C3	0160-3459		CAPACITOR-FXD .02UF +-20% 100VDC CER	28480	0160-3459
A22C4	0160-3459		CAPACITOR-FXD .02UF +-20% 100VDC CER	28480	0160-3459
A22C5	0160-3459		CAPACITOR-FXD .02UF +-20% 100VDC CER	28480	0160-3459
A22C6	0160-2055		CAPACITOR-FXD .01UF +80-20% 100VDC CER	28480	0160-2055
A22C7	0160-3459		CAPACITOR-FXD .02UF +-20% 100VDC CER	28480	0160-3459
A22C8	0160-3459		CAPACITOR-FXD .02UF +-20% 100VDC CER	28480	0160-3459
A22C9	0160-2055		CAPACITOR-FXD .01UF +80-20% 100VDC CER	28480	0160-2055
A22C10	0160-2055		CAPACITOR-FXD .01UF +80-20% 100VDC CER	28480	0160-2055
A22C11	0160-2055		CAPACITOR-FXD .01UF +80-20% 100VDC CER	28480	0160-2055
A22C12	0160-2055		CAPACITOR-FXD .01UF +80-20% 100VDC CER	28480	0160-2055
A22C13	0160-2055		CAPACITOR-FXD .01UF +80-20% 100VDC CER	28480	0160-2055
A22C14	0160-2055		CAPACITOR-FXD .01UF +80-20% 100VDC CER	28480	0160-2055
A22C15	0160-2055		CAPACITOR-FXD .01UF +80-20% 100VDC CER	28480	0160-2055
A22C16	0160-2055		CAPACITOR-FXD .01UF +80-20% 100VDC CER	28480	0160-2055
A22C17	0160-2055		CAPACITOR-FXD .01UF +80-20% 100VDC CER	28480	0160-2055
A22C18	0160-2234	1	CAPACITOR-FXD .51PF +-.25PF 500VDC	28480	0160-2234
A22C19	0160-2055		CAPACITOR-FXD .01UF +80-20% 100VDC CER	28480	0160-2055
A22C20	0160-2236		CAPACITOR-FXD 1PF +-.25PF 500VDC	28480	0160-2236
A22C21	0160-2055		CAPACITOR-FXD .01UF +80-20% 100VDC CER	28480	0160-2055
A22C22	0160-2055		CAPACITOR-FXD .01UF +80-20% 100VDC CER	28480	0160-2055
A22C23	0160-2055		CAPACITOR-FXD .01UF +80-20% 100VDC CER	28480	0160-2055
A22C24	0160-2055		CAPACITOR-FXD .01UF +80-20% 100VDC CER	28480	0160-2055
A22C25	0160-2055		CAPACITOR-FXD .01UF +80-20% 100VDC CER	28480	0160-2055
A22C26	0160-2055		CAPACITOR-FXD .01UF +80-20% 100VDC CER	28480	0160-2055
A22C27	0160-2055		CAPACITOR-FXD .01UF +80-20% 100VDC CER	28480	0160-2055
A22C28	0180-0228	2	CAPACITOR-FXD 22UF+-10% 15VDC TA	0420J	150D226X9015B2
A22C29	0160-2055		CAPACITOR-FXD .01UF +80-20% 100VDC CER	28480	0160-2055
A22C30	0160-2236		CAPACITOR-FXD 1PF +-.25PF 500VDC	28480	0160-2236
A22C31	0160-2055		CAPACITOR-FXD .01UF +80-20% 100VDC CER	28480	0160-2055
A22C32	0160-2055		CAPACITOR-FXD .01UF +80-20% 100VDC CER	28480	0160-2055
A22C33	0160-2055		CAPACITOR-FXD .01UF +80-20% 100VDC CER	28480	0160-2055
A22C34	0160-2055		CAPACITOR-FXD .01UF +80-20% 100VDC CER	28480	0160-2055
A22C35	0160-2055		CAPACITOR-FXD .01UF +80-20% 100VDC CER	28480	0160-2055
A22C36	0160-2055		CAPACITOR-FXD .01UF +80-20% 100VDC CER	28480	0160-2055
A22C37	0160-2055		CAPACITOR-FXD .01UF +80-20% 100VDC CER	28480	0160-2055
A22C38	0160-2055		CAPACITOR-FXD .01UF +80-20% 100VDC CER	28480	0160-2055
A22C39	0160-2055		CAPACITOR-FXD .01UF +80-20% 100VDC CER	28480	0160-2055
A22C40	0160-2236		CAPACITOR-FXD 1PF +-.25PF 500VDC	28480	0160-2236
A22C41	0160-2055		CAPACITOR-FXD .01UF +80-20% 100VDC CER	28480	0160-2055
A22C42	0160-2055		CAPACITOR-FXD .01UF +80-20% 100VDC CER	28480	0160-2055
A22C43	0160-2055		CAPACITOR-FXD .01UF +80-20% 100VDC CER	28480	0160-2055
A22C44	0160-2055		CAPACITOR-FXD .01UF +80-20% 100VDC CER	28480	0160-2055
A22C45			NOT ASSIGNED		
A22C46	0160-2055		CAPACITOR-FXD .01UF +80-20% 100VDC CER	28480	0160-2055
A22C47	0160-2055		CAPACITOR-FXD .01UF +80-20% 100VDC CER	28480	0160-2055
A22C48	0160-2055		CAPACITOR-FXD .01UF +80-20% 100VDC CER	28480	0160-2055
A22C49	0160-2055		CAPACITOR-FXD .01UF +80-20% 100VDC CER	28480	0160-2055
A22C50	0160-2055		CAPACITOR-FXD .01UF +80-20% 100VDC CER	28480	0160-2055
A22C51	0160-3459		CAPACITOR-FXD .02UF +-20% 100VDC CER	28480	0160-3459
A22C52	0160-2236		CAPACITOR-FXD 1PF +-.25PF 500VDC	28480	0160-2236
A22C53	0160-2055		CAPACITOR-FXD .01UF +80-20% 100VDC CER	28480	0160-2055
A22C54	0160-2055		CAPACITOR-FXD .01UF +80-20% 100VDC CER	28480	0160-2055
A22C55	0160-2055		CAPACITOR-FXD .01UF +80-20% 100VDC CER	28480	0160-2055
A22C56	0160-2055		CAPACITOR-FXD .01UF +80-20% 100VDC CER	28480	0160-2055
A22C57	0160-2256	1	CAPACITOR-FXD 9.1PF +-.25PF 500VDC	28480	0160-2256
A22C58	0160-2055		CAPACITOR-FXD .01UF +80-20% 100VDC CER	28480	0160-2055
A22C59	0160-2055		CAPACITOR-FXD .01UF +80-20% 100VDC CER	28480	0160-2055
A22C60	0160-2055		CAPACITOR-FXD .01UF +80-20% 100VDC CER	28480	0160-2055
A22C61	0160-2055		CAPACITOR-FXD .01UF +80-20% 100VDC CER	28480	0160-2055
A22C62	0140-0195	2	CAPACITOR-FXD 130PF +-5% 300VDC MICA	72136	DM15F131J0300WV1CR
A22C63	0160-2055		CAPACITOR-FXD .01UF +80-20% 100VDC CER	28480	0160-2055
A22C64	0160-2308		CAPACITOR-FXD 36PF +-5% 300VDC	28480	0160-2308
A22C65	0160-2240	1	CAPACITOR-FXD 2PF +-.25PF 500VDC	28480	0160-2240
A22C66	0160-2055		CAPACITOR-FXD .01UF +80-20% 100VDC CER	28480	0160-2055
A22C67	0160-2236		CAPACITOR-FXD 1PF +-.25PF 500VDC	28480	0160-2236
A22C68	0160-2055		CAPACITOR-FXD .01UF +80-20% 100VDC CER	28480	0160-2055
A22C69	0160-2055		CAPACITOR-FXD .01UF +80-20% 100VDC CER	28480	0160-2055
A22C70	0160-2055		CAPACITOR-FXD .01UF +80-20% 100VDC CER	28480	0160-2055
A22C71	0160-2055		CAPACITOR-FXD .01UF +80-20% 100VDC CER	28480	0160-2055
A22C72	0160-2055		CAPACITOR-FXD .01UF +80-20% 100VDC CER	28480	0160-2055
A22C73	0160-2055		CAPACITOR-FXD .01UF +80-20% 100VDC CER	28480	0160-2055
A22C74	0180-2206	1	CAPACITOR-FXD 60UF+-10% 6VDC TA	0420J	150D606X9006B2
A22C75	0160-2055		CAPACITOR-FXD .01UF +80-20% 100VDC CER	28480	0160-2055

See introduction to this section for ordering information

Scans by ARTEK MEDIA =>

Table 6-2. Replaceable Parts

Reference Designation	HP Part Number	Qty	Description	Mfr Code	Mfr Part Number
A22C76	0160-2055		CAPACITOR-FXD .01UF +80-20% 100VDC CER	28480	0160-2055
A22C77	0160-2055		CAPACITOR-FXD .01UF +80-20% 100VDC CER	28480	0160-2055
A22CR1	1901-0040		DIODE-SWITCHING 30V 50MA 2NS DO-35	28480	1901-0040
A22CR2	1901-0040		DIODE-SWITCHING 30V 50MA 2NS DO-35	28480	1901-0040
A22CR3	1901-1085	19	DIODE-SCHOTTKY	28480	1901-1085
A22CR4	1901-1085		DIODE-SCHOTTKY	28480	1901-1085
A22CR5	1901-0047	28	DIODE-SWITCHING 20V 75MA 10NS	28480	1901-0047
A22CR6	1901-0047		DIODE-SWITCHING 20V 75MA 10NS	28480	1901-0047
A22CR7	1901-0047		DIODE-SWITCHING 20V 75MA 10NS	28480	1901-0047
A22CR8	1901-1085		DIODE-SCHOTTKY	28480	1901-1085
A22CR9	1901-1085		DIODE-SCHOTTKY	28480	1901-1085
A22CR10	1901-1085		DIODE-SCHOTTKY	28480	1901-1085
A22CR11	1901-1085		DIODE-SCHOTTKY	28480	1901-1085
A22CR12	1901-1085		DIODE-SCHOTTKY	28480	1901-1085
A22CR13	1901-1085		DIODE-SCHOTTKY	28480	1901-1085
A22CR14	1901-0040		DIODE-SWITCHING 30V 50MA 2NS DO-35	28480	1901-0040
A22CR15	1901-1085		DIODE-SCHOTTKY	28480	1901-1085
A22CR16	1901-1070	18	DIODE-PIN	28480	1901-1070
A22CR17	1901-1085		DIODE-SCHOTTKY	28480	1901-1085
A22CR18	1901-1070		DIODE-PIN	28480	1901-1070
A22CR19	1901-0040		DIODE-SWITCHING 30V 50MA 2NS DO-35	28480	1901-0040
A22CR20	1901-1085		DIODE-SCHOTTKY	28480	1901-1085
A22CR21	1901-1085		DIODE-SCHOTTKY	28480	1901-1085
A22CR22	1901-1085		DIODE-SCHOTTKY	28480	1901-1085
A22CR23	1901-1085		DIODE-SCHOTTKY	28480	1901-1085
A22CR24	1901-0040		DIODE-SWITCHING 30V 50MA 2NS DO-35	28480	1901-0040
A22CR25	1901-1085		DIODE-SCHOTTKY	28480	1901-1085
A22CR26	1901-0040		DIODE-SWITCHING 30V 50MA 2NS DO-35	28480	1901-0040
A22CR27	1901-1085		DIODE-SCHOTTKY	28480	1901-1085
A22CR28	1901-1085		DIODE-SCHOTTKY	28480	1901-1085
A22CR29	1901-0040		DIODE-SWITCHING 30V 50MA 2NS DO-35	28480	1901-0040
A22CR30	1901-0040		DIODE-SWITCHING 30V 50MA 2NS DO-35	28480	1901-0040
A22CR31	1901-0040		DIODE-SWITCHING 30V 50MA 2NS DO-35	28480	1901-0040
A22CR32	1901-0040		DIODE-SWITCHING 30V 50MA 2NS DO-35	28480	1901-0040
A22E1	9170-0029		CORE-SHIELDING BEAD	0188G	56-590-65A2/4A
A22L1	9100-1622	2	COIL-MLD 24UH 5% Q=60 .155DX.375LG	02178	15-4455-1J
A22L2	9140-0105	1	COIL-MLD 8.2UH 10% Q=50 .155DX.375LG	28480	9140-0105
A22L3	9100-1619		COIL-MLD 6.8UH 10% Q=50 .155DX.375LG	02178	15-4435-2K
A22L4	9100-1619		COIL-MLD 6.8UH 10% Q=50 .155DX.375LG	02178	15-4435-2K
A22L5	9100-1619		COIL-MLD 6.8UH 10% Q=50 .155DX.375LG	02178	15-4435-2K
A22L6	9100-1619		COIL-MLD 6.8UH 10% Q=50 .155DX.375LG	02178	15-4435-2K
A22L7	9100-1619		COIL-MLD 6.8UH 10% Q=50 .155DX.375LG	02178	15-4435-2K
A22L8	9100-1619		COIL-MLD 6.8UH 10% Q=50 .155DX.375LG	02178	15-4435-2K
A22L9	9100-1627	1	COIL-MLD 39UH 5% Q=60 .155DX.375LG	02178	15-1315-2J
A22L10	9100-1629	1	COIL-MLD 47UH 5% Q=55 .155DX.375LG	02178	15-1315-4J
A22L11	9100-1622		COIL-MLD 24UH 5% Q=60 .155DX.375LG	02178	15-4455-1J
A22L12	9100-1619		COIL-MLD 6.8UH 10% Q=50 .155DX.375LG	02178	15-4435-2K
A22L13	9140-0145	1	COIL-MLD 8.2UH 10% Q=60 .095DX.25LG	02178	09-4446-3K
A22L14	9100-2269	1	COIL-MLD 27UH 10% Q=45 .095DX.25LG	02178	09-1316-5K
A22Q1	1854-0071	10	TRANSISTOR NPN SI PD=300MW FT=200MHZ	28480	1854-0071
A22Q2	1854-0019		TRANSISTOR NPN SI TO-18 PD=360MW	28480	1854-0019
A22Q3	1854-0019		TRANSISTOR NPN SI TO-18 PD=360MW	28480	1854-0019
A22Q4	1854-0019		TRANSISTOR NPN SI TO-18 PD=360MW	28480	1854-0019
A22Q5	1854-0019		TRANSISTOR NPN SI TO-18 PD=360MW	28480	1854-0019
A22Q6	1854-0019		TRANSISTOR NPN SI TO-18 PD=360MW	28480	1854-0019
A22Q7	1854-0019		TRANSISTOR NPN SI TO-18 PD=360MW	28480	1854-0019
A22Q8	1854-0019		TRANSISTOR NPN SI TO-18 PD=360MW	28480	1854-0019
A22Q9	1854-0019		TRANSISTOR NPN SI TO-18 PD=360MW	28480	1854-0019
A22Q10	1854-0019		TRANSISTOR NPN SI TO-18 PD=360MW	28480	1854-0019
A22Q11	1854-0019		TRANSISTOR NPN SI TO-18 PD=360MW	28480	1854-0019
A22Q12	1854-0019		TRANSISTOR NPN SI TO-18 PD=360MW	28480	1854-0019
A22Q13	1854-0019		TRANSISTOR NPN SI TO-18 PD=360MW	28480	1854-0019
A22Q14	1854-0019		TRANSISTOR NPN SI TO-18 PD=360MW	28480	1854-0019
A22Q15	1854-0019		TRANSISTOR NPN SI TO-18 PD=360MW	28480	1854-0019
A22Q16	1853-0020	2	TRANSISTOR PNP SI PD=300MW FT=150MHZ	28480	1853-0020
A22Q17	1853-0007		TRANSISTOR PNP 2N3251 SI TO-18 PD=360MW	0203G	2N3251
A22Q18	1854-0345	9	TRANSISTOR NPN 2N5179 SI TO-72 PD=200MW	0203G	2N5179
A22Q19	1853-0015	1	TRANSISTOR PNP SI PD=200MW FT=500MHZ	28480	1853-0015
A22Q20	1854-0475	1	TRANSISTOR-DUAL NPN PD=750MW	28480	1854-0475
A22Q21	1854-0404		TRANSISTOR NPN SI TO-18 PD=360MW	28480	1854-0404
A22Q22	1853-0020		TRANSISTOR PNP SI PD=300MW FT=150MHZ	28480	1853-0020
A22Q23	1854-0071		TRANSISTOR NPN SI PD=300MW FT=200MHZ	28480	1854-0071
A22Q24	1854-0071		TRANSISTOR NPN SI PD=300MW FT=200MHZ	28480	1854-0071
A22Q25	1854-0039		TRANSISTOR NPN 2N3053 SI TO-39 PD=1W	0203G	2N3053

See introduction to this section for ordering information

Scans by ARTEK MEDIA =>

Table 6-2. Replaceable Parts

Reference Designation	HP Part Number	Qty	Description	Mfr Code	Mfr Part Number
A22R1	2100-3109	2	RESISTOR-TRMR 2K 10% C SIDE-ADJ 17-TRN	73138	89PR2K
A22R2	2100-3161	1	RESISTOR-TRMR 20K 10% C SIDE-ADJ 17-TRN	73138	89PR20K
A22R3	2100-3109		RESISTOR-TRMR 2K 10% C SIDE-ADJ 17-TRN	73138	89PR2K
A22R4	0757-0442		RESISTOR 10K 1% .125W F TC=0+-100	03298	C4-1/8-T0-1002-F
A22R5	0757-0279		RESISTOR 3.16K 1% .125W F TC=0+-100	03298	C4-1/8-T0-3161-F
A22R6	0757-0346		RESISTOR 10 1% .125W F TC=0+-100	03298	C4-1/8-T0-10R0-F
A22R7	0757-0442		RESISTOR 10K 1% .125W F TC=0+-100	03298	C4-1/8-T0-1002-F
A22R8	0757-0280		RESISTOR 1K 1% .125W F TC=0+-100	03298	C4-1/8-T0-1001-F
A22R9	0757-0439		RESISTOR 6.81K 1% .125W F TC=0+-100	03298	C4-1/8-T0-6811-F
A22R10	0757-0465		RESISTOR 100K 1% .125W F TC=0+-100	03298	C4-1/8-T0-1003-F
A22R11	0757-0440		RESISTOR 7.5K 1% .125W F TC=0+-100	03298	C4-1/8-T0-7501-F
A22R12	0698-3157		RESISTOR 19.6K 1% .125W F TC=0+-100	03298	C4-1/8-T0-1962-F
A22R13	0698-3444		RESISTOR 316 1% .125W F TC=0+-100	03298	C4-1/8-T0-316R-F
A22R14	0757-0420		RESISTOR 750 1% .125W F TC=0+-100	03298	C4-1/8-T0-751-F
A22R15	0698-3136		RESISTOR 17.8K 1% .125W F TC=0+-100	03298	C4-1/8-T0-1782-F
A22R16	0698-3443		RESISTOR 287 1% .125W F TC=0+-100	03298	C4-1/8-T0-287R-F
A22R17	0698-3156		RESISTOR 14.7K 1% .125W F TC=0+-100	03298	C4-1/8-T0-1472-F
A22R18			NOT ASSIGNED		
A22R19	0698-0085		RESISTOR 2.61K 1% .125W F TC=0+-100	03298	C4-1/8-T0-2611-F
A22R20	0757-0279		RESISTOR 3.16K 1% .125W F TC=0+-100	03298	C4-1/8-T0-3161-F
A22R21	0757-0289		RESISTOR 13.3K 1% .125W F TC=0+-100	0299E	MF4C1/8-T0-1332-F
A22R22	0757-0346		RESISTOR 10 1% .125W F TC=0+-100	03298	C4-1/8-T0-10R0-F
A22R23	0698-3444		RESISTOR 316 1% .125W F TC=0+-100	03298	C4-1/8-T0-316R-F
A22R24	0757-0279		RESISTOR 3.16K 1% .125W F TC=0+-100	03298	C4-1/8-T0-3161-F
A22R25	0698-3444		RESISTOR 316 1% .125W F TC=0+-100	03298	C4-1/8-T0-316R-F
A22R26	0757-0290		RESISTOR 6.19K 1% .125W F TC=0+-100	0299E	MF4C1/8-T0-6191-F
A22R27	0757-0346		RESISTOR 10 1% .125W F TC=0+-100	03298	C4-1/8-T0-10R0-F
A22R28	0698-3449		RESISTOR 28.7K 1% .125W F TC=0+-100	03298	C4-1/8-T0-2872-F
A22R29	0757-0199		RESISTOR 21.5K 1% .125W F TC=0+-100	03298	C4-1/8-T0-2152-F
A22R30	0698-3152		RESISTOR 3.48K 1% .125W F TC=0+-100	03298	C4-1/8-T0-3481-F
A22R31	0757-0279		RESISTOR 3.16K 1% .125W F TC=0+-100	03298	C4-1/8-T0-3161-F
A22R32	0757-0289		RESISTOR 13.3K 1% .125W F TC=0+-100	0299E	MF4C1/8-T0-1332-F
A22R33	0757-0289		RESISTOR 13.3K 1% .125W F TC=0+-100	0299E	MF4C1/8-T0-1332-F
A22R34	0698-3444		RESISTOR 316 1% .125W F TC=0+-100	03298	C4-1/8-T0-316R-F
A22R35	0757-0346		RESISTOR 10 1% .125W F TC=0+-100	03298	C4-1/8-T0-10R0-F
A22R36	0698-3438		RESISTOR 147 1% .125W F TC=0+-100	03298	C4-1/8-T0-147R-F
A22R37	0757-0439		RESISTOR 6.81K 1% .125W F TC=0+-100	03298	C4-1/8-T0-6811-F
A22R38	0757-0279		RESISTOR 3.16K 1% .125W F TC=0+-100	03298	C4-1/8-T0-3161-F
A22R39	0698-3154		RESISTOR 4.22K 1% .125W F TC=0+-100	03298	C4-1/8-T0-4221-F
A22R40	0757-0280		RESISTOR 1K 1% .125W F TC=0+-100	03298	C4-1/8-T0-1001-F
A22R41	0757-0346		RESISTOR 10 1% .125W F TC=0+-100	03298	C4-1/8-T0-10R0-F
A22R42	0757-0346		RESISTOR 10 1% .125W F TC=0+-100	03298	C4-1/8-T0-10R0-F
A22R43	0757-0289		RESISTOR 13.3K 1% .125W F TC=0+-100	0299E	MF4C1/8-T0-1332-F
A22R44			NOT ASSIGNED		
A22R45	0757-0439		RESISTOR 6.81K 1% .125W F TC=0+-100	03298	C4-1/8-T0-6811-F
A22R46	0698-0083		RESISTOR 1.96K 1% .125W F TC=0+-100	03298	C4-1/8-T0-1961-F
A22R47	0757-0279		RESISTOR 3.16K 1% .125W F TC=0+-100	03298	C4-1/8-T0-3161-F
A22R48	0757-0289		RESISTOR 13.3K 1% .125W F TC=0+-100	0299E	MF4C1/8-T0-1332-F
A22R49*	0757-0416	8	RESISTOR 511 1% .125W F TC=0+-100	03298	C4-1/8-T0-511R-F
			*FACTORY SELECTED PART		
A22R50	0698-3444		RESISTOR 316 1% .125W F TC=0+-100	03298	C4-1/8-T0-316R-F
A22R51	0757-0346		RESISTOR 10 1% .125W F TC=0+-100	03298	C4-1/8-T0-10R0-F
A22R52	0757-0465		RESISTOR 100K 1% .125W F TC=0+-100	03298	C4-1/8-T0-1003-F
A22R53	0698-0083		RESISTOR 1.96K 1% .125W F TC=0+-100	03298	C4-1/8-T0-1961-F
A22R54	0757-0280		RESISTOR 1K 1% .125W F TC=0+-100	03298	C4-1/8-T0-1001-F
A22R55	0698-3151	5	RESISTOR 2.87K 1% .125W F TC=0+-100	03298	C4-1/8-T0-2871-F
A22R56	0757-0458		RESISTOR 51.1K 1% .125W F TC=0+-100	03298	C4-1/8-T0-5112-F
A22R57	0757-0346		RESISTOR 10 1% .125W F TC=0+-100	03298	C4-1/8-T0-10R0-F
A22R58	0757-0289		RESISTOR 13.3K 1% .125W F TC=0+-100	0299E	MF4C1/8-T0-1332-F
A22R59	0757-0442		RESISTOR 10K 1% .125W F TC=0+-100	03298	C4-1/8-T0-1002-F
A22R60	0698-3157		RESISTOR 19.6K 1% .125W F TC=0+-100	03298	C4-1/8-T0-1962-F
A22R61	0757-0442		RESISTOR 10K 1% .125W F TC=0+-100	03298	C4-1/8-T0-1002-F
A22R62	0698-3152		RESISTOR 3.48K 1% .125W F TC=0+-100	03298	C4-1/8-T0-3481-F
A22R63	0698-3157		RESISTOR 19.6K 1% .125W F TC=0+-100	03298	C4-1/8-T0-1962-F
A22R64	0757-0279		RESISTOR 3.16K 1% .125W F TC=0+-100	03298	C4-1/8-T0-3161-F
A22R65*	0757-0290		RESISTOR 6.19K 1% .125W F TC=0+-100	0299E	MF4C1/8-T0-6191-F
			*FACTORY SELECTED PART		
A22R66	0757-0439		RESISTOR 6.81K 1% .125W F TC=0+-100	03298	C4-1/8-T0-6811-F
A22R67	0757-0279		RESISTOR 3.16K 1% .125W F TC=0+-100	03298	C4-1/8-T0-3161-F
A22R68	0757-0289		RESISTOR 13.3K 1% .125W F TC=0+-100	0299E	MF4C1/8-T0-1332-F
A22R69*	0757-0289		RESISTOR 13.3K 1% .125W F TC=0+-100	0299E	MF4C1/8-T0-1332-F
			*FACTORY SELECTED PART		
A22R70	0757-0463	1	RESISTOR 82.5K 1% .125W F TC=0+-100	03298	C4-1/8-T0-8252-F
A22R71	0698-3444		RESISTOR 316 1% .125W F TC=0+-100	03298	C4-1/8-T0-316R-F
A22R72	0757-0290		RESISTOR 6.19K 1% .125W F TC=0+-100	0299E	MF4C1/8-T0-6191-F
A22R73	0757-0346		RESISTOR 10 1% .125W F TC=0+-100	03298	C4-1/8-T0-10R0-F
A22R74	0698-3151		RESISTOR 2.87K 1% .125W F TC=0+-100	03298	C4-1/8-T0-2871-F
A22R75	0757-0442		RESISTOR 10K 1% .125W F TC=0+-100	03298	C4-1/8-T0-1002-F

See introduction to this section for ordering information

Scans by ARTEK MEDIA =>

Table 6-2. Replaceable Parts

Reference Designation	HP Part Number	Qty	Description	Mfr Code	Mfr Part Number
A22R76	0757-0289		RESISTOR 13.3K 1% .125W F TC=0+-100	0299E	MF4C1/8-T0-1332-F
A22R77	0757-0280		RESISTOR 1K 1% .125W F TC=0+-100	03298	C4-1/8-T0-1001-F
A22R78	0757-0346		RESISTOR 10 1% .125W F TC=0+-100	03298	C4-1/8-T0-10R0-F
A22R79	0757-0346		RESISTOR 10 1% .125W F TC=0+-100	03298	C4-1/8-T0-10R0-F
A22R80	0757-0439		RESISTOR 6.81K 1% .125W F TC=0+-100	03298	C4-1/8-T0-6811-F
A22R81	0757-0403		RESISTOR 121 1% .125W F TC=0+-100	03298	C4-1/8-T0-121R-F
A22R82	0757-0290		RESISTOR 6.19K 1% .125W F TC=0+-100	0299E	MF4C1/8-T0-6191-F
A22R83	0757-0418	6	RESISTOR 619 1% .125W F TC=0+-100	03298	C4-1/8-T0-619R-F
A22R84	0757-0402		RESISTOR 110 1% .125W F TC=0+-100	03298	C4-1/8-T0-111-F
A22R85	0757-0279		RESISTOR 3.16K 1% .125W F TC=0+-100	03298	C4-1/8-T0-3161-F
A22R86			NOT ASSIGNED		
A22R87	0757-0289		RESISTOR 13.3K 1% .125W F TC=0+-100	0299E	MF4C1/8-T0-1332-F
A22R88	0757-0416		RESISTOR 511 1% .125W F TC=0+-100	03298	C4-1/8-T0-511R-F
A22R89	0757-0346		RESISTOR 10 1% .125W F TC=0+-100	03298	C4-1/8-T0-10R0-F
A22R90	0698-3444		RESISTOR 316 1% .125W F TC=0+-100	03298	C4-1/8-T0-316R-F
A22R91	0757-0439		RESISTOR 6.81K 1% .125W F TC=0+-100	03298	C4-1/8-T0-6811-F
A22R92	0757-0346		RESISTOR 10 1% .125W F TC=0+-100	03298	C4-1/8-T0-10R0-F
A22R93	0757-0438		RESISTOR 5.11K 1% .125W F TC=0+-100	03298	C4-1/8-T0-5111-F
A22R94	0757-0346		RESISTOR 10 1% .125W F TC=0+-100	03298	C4-1/8-T0-10R0-F
A22R95	0757-0289		RESISTOR 13.3K 1% .125W F TC=0+-100	0299E	MF4C1/8-T0-1332-F
A22R96	0757-0280		RESISTOR 1K 1% .125W F TC=0+-100	03298	C4-1/8-T0-1001-F
A22R97	0757-0346		RESISTOR 10 1% .125W F TC=0+-100	03298	C4-1/8-T0-10R0-F
A22R98	0757-0346		RESISTOR 10 1% .125W F TC=0+-100	03298	C4-1/8-T0-10R0-F
A22R99	0757-0346		RESISTOR 10 1% .125W F TC=0+-100	03298	C4-1/8-T0-10R0-F
A22R100	0757-0346		RESISTOR 10 1% .125W F TC=0+-100	03298	C4-1/8-T0-10R0-F
A22R101	0757-0439		RESISTOR 6.81K 1% .125W F TC=0+-100	03298	C4-1/8-T0-6811-F
A22R102	0757-0290		RESISTOR 6.19K 1% .125W F TC=0+-100	0299E	MF4C1/8-T0-6191-F
A22R103	0757-0405	5	RESISTOR 162 1% .125W F TC=0+-100	03298	C4-1/8-T0-162R-F
A22R104	0757-0279		RESISTOR 3.16K 1% .125W F TC=0+-100	03298	C4-1/8-T0-3161-F
A22R105	0757-0280		RESISTOR 1K 1% .125W F TC=0+-100	03298	C4-1/8-T0-1001-F
A22R106	0757-0289		RESISTOR 13.3K 1% .125W F TC=0+-100	0299E	MF4C1/8-T0-1332-F
A22R107	0757-0288		RESISTOR 9.09K 1% .125W F TC=0+-100	0299E	MF4C1/8-T0-9091-F
A22R108	0698-3444		RESISTOR 316 1% .125W F TC=0+-100	03298	C4-1/8-T0-316R-F
A22R109	0757-0439		RESISTOR 6.81K 1% .125W F TC=0+-100	03298	C4-1/8-T0-6811-F
A22R110	0757-0346		RESISTOR 10 1% .125W F TC=0+-100	03298	C4-1/8-T0-10R0-F
A22R111	0698-3158		RESISTOR 23.7K 1% .125W F TC=0+-100	03298	C4-1/8-T0-2372-F
A22R112	0698-3160		RESISTOR 31.6K 1% .125W F TC=0+-100	03298	C4-1/8-T0-3162-F
A22R113	0698-3160		RESISTOR 31.6K 1% .125W F TC=0+-100	03298	C4-1/8-T0-3162-F
A22R114	0698-3160		RESISTOR 31.6K 1% .125W F TC=0+-100	03298	C4-1/8-T0-3162-F
A22R115	0757-0346		RESISTOR 10 1% .125W F TC=0+-100	03298	C4-1/8-T0-10R0-F
A22R116	0757-0289		RESISTOR 13.3K 1% .125W F TC=0+-100	0299E	MF4C1/8-T0-1332-F
A22R117	0698-0085		RESISTOR 2.61K 1% .125W F TC=0+-100	03298	C4-1/8-T0-2611-F
A22R118	0757-0439		RESISTOR 6.81K 1% .125W F TC=0+-100	03298	C4-1/8-T0-6811-F
A22R119	0757-0290		RESISTOR 6.19K 1% .125W F TC=0+-100	0299E	MF4C1/8-T0-6191-F
A22R120	0757-0279		RESISTOR 3.16K 1% .125W F TC=0+-100	03298	C4-1/8-T0-3161-F
A22R121	0698-3438		RESISTOR 147 1% .125W F TC=0+-100	03298	C4-1/8-T0-147R-F
A22R122	0757-0447		RESISTOR 16.2K 1% .125W F TC=0+-100	03298	C4-1/8-T0-1622-F
A22R123	0757-0447		RESISTOR 16.2K 1% .125W F TC=0+-100	03298	C4-1/8-T0-1622-F
A22R124	0757-0441		RESISTOR 8.25K 1% .125W F TC=0+-100	03298	C4-1/8-T0-8251-F
A22R125	0698-3260		RESISTOR 464K 1% .125W F TC=0+-100	0160G	CC
A22R126	0757-0442		RESISTOR 10K 1% .125W F TC=0+-100	03298	C4-1/8-T0-1002-F
A22R127	0757-0421	4	RESISTOR 825 1% .125W F TC=0+-100	03298	C4-1/8-T0-825R-F
A22R128	0757-0290		RESISTOR 6.19K 1% .125W F TC=0+-100	0299E	MF4C1/8-T0-6191-F
A22R129	0757-0290		RESISTOR 6.19K 1% .125W F TC=0+-100	0299E	MF4C1/8-T0-6191-F
A22U1	1826-0092		IC OP AMP	28480	1826-0092
A22VR1	1902-0041		DIODE-ZNR 5.11V 5% DO-7 PD=.4W TC=-.009%	0203G	BZ 10939-98
A22VR2	1902-0048		DIODE-ZNR 6.81V 5% DO-7 PD=.4W TC=+.043%	0223G	FZ7244
A22VR3	1902-0579	1	DIODE-ZNR 5.11V 5% DO-15 PD=1W TC=-.009%	28480	1902-0579
A23	08565-60034	1	ASSEMBLY, BANDWIDTH FILTER NO. 2	28480	08565-60034
A23C1	0160-2055		CAPACITOR-FXD .01UF +80-20% 100VDC CER	28480	0160-2055
A23C2	0160-0127	2	CAPACITOR-FXD 1UF +-20% 25VDC CER	28480	0160-0127
A23C3	0160-2236		CAPACITOR-FXD 1PF +-.25PF 500VDC	28480	0160-2236
A23C4	0160-2055		CAPACITOR-FXD .01UF +80-20% 100VDC CER	28480	0160-2055
A23C5	0160-3459		CAPACITOR-FXD .02UF +-20% 100VDC CER	28480	0160-3459
A23C6	0160-2055		CAPACITOR-FXD .01UF +80-20% 100VDC CER	28480	0160-2055
A23C7	0160-2055		CAPACITOR-FXD .01UF +80-20% 100VDC CER	28480	0160-2055
A23C8	0160-2207		CAPACITOR-FXD 300PF +-5% 300VDC MICA0+70	28480	0160-2207
A23C9	0160-2055		CAPACITOR-FXD .01UF +80-20% 100VDC CER	28480	0160-2055
A23C10	0160-2055		CAPACITOR-FXD .01UF +80-20% 100VDC CER	28480	0160-2055
A23C11	0160-2055		CAPACITOR-FXD .01UF +80-20% 100VDC CER	28480	0160-2055
A23C12	0160-2055		CAPACITOR-FXD .01UF +80-20% 100VDC CER	28480	0160-2055
A23C13	0160-3456		CAPACITOR-FXD 1000PF +-10% 1KVDC CER	28480	0160-3456
A23C14	0160-2257		CAPACITOR-FXD 10PF +-5% 500VDC CER0+-60	28480	0160-2257
A23C15	0121-0059	4	CAPACITOR-V TRMR-CER 2-8PF 350V PC-MTG	73899	DV11PR8A

See introduction to this section for ordering information

Scans by ARTEK MEDIA =>

Table 6-2. Replaceable Parts

Reference Designation	HP Part Number	Qty	Description	Mfr Code	Mfr Part Number
A23C16	0160-2244	2	CAPACITOR-FXD 3PF +-.25PF 500VDC	28480	0160-2244
A23C17	0160-2055		CAPACITOR-FXD .01UF +80-20% 100VDC CER	28480	0160-2055
A23C18	0160-2055		CAPACITOR-FXD .01UF +80-20% 100VDC CER	28480	0160-2055
A23C19	0160-2055		CAPACITOR-FXD .01UF +80-20% 100VDC CER	28480	0160-2055
A23C20	0140-0194	4	CAPACITOR-FXD 110PF +-5% 300VDC MICA	72136	DM15F111J0300WV1CR
A23C21	0160-3431	4	CAPACITOR-FXD 6.8PF +-.5PF 500VDC	28480	0160-3431
A23C22	0160-4084		CAPACITOR-FXD .1UF +-20% 50VDC CER	28480	0160-4084
A23C23	0121-0036	4	CAPACITOR-V TRMR-CER 5.5-18PF 350V	73899	DV11PR18A
A23C24			NOT ASSIGNED		
A23C25	0121-0446	4	CAPACITOR-V TRMR-CER 4.5-20PF 160V 0146H	0146H	7S-TRIKO-19 4.5-20 PF, N750
A23C26	0160-2055		CAPACITOR-FXD .01UF +80-20% 100VDC CER	28480	0160-2055
A23C27	0160-2055		CAPACITOR-FXD .01UF +80-20% 100VDC CER	28480	0160-2055
A23C28	0160-2055		CAPACITOR-FXD .01UF +80-20% 100VDC CER	28480	0160-2055
A23C29	0160-3456		CAPACITOR-FXD 1000PF +-10% 1KVDC CER	28480	0160-3456
A23C30	0160-2055		CAPACITOR-FXD .01UF +80-20% 100VDC CER	28480	0160-2055
A23C31	0160-3459		CAPACITOR-FXD .02UF +-20% 100VDC CER	28480	0160-3459
A23C32	0160-2055		CAPACITOR-FXD .01UF +80-20% 100VDC CER	28480	0160-2055
A23C33	0160-2207		CAPACITOR-FXD 300PF +-5% 300VDC MICA0+70	28480	0160-2207
A23C34	0160-2055		CAPACITOR-FXD .01UF +80-20% 100VDC CER	28480	0160-2055
A23C35	0160-2055		CAPACITOR-FXD .01UF +80-20% 100VDC CER	28480	0160-2055
A23C36	0160-2055		CAPACITOR-FXD .01UF +80-20% 100VDC CER	28480	0160-2055
A23C37	0160-2257		CAPACITOR-FXD 10PF +-5% 500VDC CER0+-60	28480	0160-2257
A23C38	0121-0059		CAPACITOR-V TRMR-CER 2-8PF 350V RC-MTG	73899	DV11PR8A
A23C39	0160-2241	2	CAPACITOR-FXD 2.2PF +-.25PF 500VDC	28480	0160-2241
A23C40	0160-2055		CAPACITOR-FXD .01UF +80-20% 100VDC CER	28480	0160-2055
A23C41	0160-3456		CAPACITOR-FXD 1000PF +-10% 1KVDC CER	28480	0160-3456
A23C42	0160-2055		CAPACITOR-FXD .01UF +80-20% 100VDC CER	28480	0160-2055
A23C43	0140-0194		CAPACITOR-FXD 110PF +-5% 300VDC MICA	72136	DM15F111J0300WV1CR
A23C44	0160-3431		CAPACITOR-FXD 6.8PF +-.5PF 500VDC	28480	0160-3431
A23C45	0121-0036		CAPACITOR-V TRMR-CER 5.5-18PF 350V	73899	DV11PR18A
A23C46	0160-4084		CAPACITOR-FXD .1UF +-20% 50VDC CER	28480	0160-4084
A23C47	0160-2055		CAPACITOR-FXD .01UF +80-20% 100VDC CER	28480	0160-2055
A23C48	0160-2055		CAPACITOR-FXD .01UF +80-20% 100VDC CER	28480	0160-2055
A23C49	0160-2055		CAPACITOR-FXD .01UF +80-20% 100VDC CER	28480	0160-2055
A23C50	0160-2055		CAPACITOR-FXD .01UF +80-20% 100VDC CER	28480	0160-2055
A23C51	0160-2055		CAPACITOR-FXD .01UF +80-20% 100VDC CER	28480	0160-2055
A23C52	0160-2055		CAPACITOR-FXD .01UF +80-20% 100VDC CER	28480	0160-2055
A23C53	0160-2055		CAPACITOR-FXD .01UF +80-20% 100VDC CER	28480	0160-2055
A23C54	0121-0446		CAPACITOR-V TRMR-CER 4.5-20PF 160V	0146H	7S-TRIKO-19 4.5-20 PF, N750
A23C55	0160-2055		CAPACITOR-FXD .01UF +80-20% 100VDC CER	28480	0160-2055
A23C56 THRU A23C59			NOT ASSIGNED		
A23C60	0160-2055		CAPACITOR-FXD .01UF +80-20% 100VDC CER	28480	0160-2055
A23C61	0160-2055		CAPACITOR-FXD .01UF +80-20% 100VDC CER	28480	0160-2055
A23C62	0160-2055		CAPACITOR-FXD .01UF +80-20% 100VDC CER	28480	0160-2055
A23C63	0160-2055		CAPACITOR-FXD .01UF +80-20% 100VDC CER	28480	0160-2055
A23C64	0160-2055		CAPACITOR-FXD .01UF +80-20% 100VDC CER	28480	0160-2055
A23C65	0160-2055		CAPACITOR-FXD .01UF +80-20% 100VDC CER	28480	0160-2055
A23C66	0160-2055		CAPACITOR-FXD .01UF +80-20% 100VDC CER	28480	0160-2055
A23C67	0160-2055		CAPACITOR-FXD .01UF +80-20% 100VDC CER	28480	0160-2055
A23C68 THRU A23C72			NOT ASSIGNED		
A23C73	0121-0452	5	CAPACITOR-V TRMR-AIR 1.3-5.4PF 250V	74970	187-0103-005
A23C74	0121-0452		CAPACITOR-V TRMR-AIR 1.3-5.4PF 250V	74970	187-0103-005
A23CR1	1901-0047		DIODE-SWITCHING 20V 75MA 10NS	28480	1901-0047
A23CR2	1901-0047		DIODE-SWITCHING 20V 75MA 10NS	28480	1901-0047
A23CR3	1901-1070		DIODE:PIN	28480	1901-1070
A23CR4	1901-1070		DIODE:PIN	28480	1901-1070
A23CR5	1901-1070		DIODE:PIN	28480	1901-1070
A23CR6	1901-0047		DIODE-SWITCHING 20V 75MA 10NS	28480	1901-0047
A23CR7			NOT ASSIGNED		
A23CR8	1901-1070		DIODE:PIN	28480	1901-1070
A23CR9	1901-0047		DIODE-SWITCHING 20V 75MA 10NS	28480	1901-0047
A23CR10	1901-0047		DIODE-SWITCHING 20V 75MA 10NS	28480	1901-0047
A23CR11	1901-1070		DIODE:PIN	28480	1901-1070
A23CR12	1901-1070		DIODE:PIN	28480	1901-1070
A23CR13	1901-0047		DIODE-SWITCHING 20V 75MA 10NS	28480	1901-0047
A23CR14	1901-0047		DIODE-SWITCHING 20V 75MA 10NS	28480	1901-0047
A23CR15	1901-0047		DIODE-SWITCHING 20V 75MA 10NS	28480	1901-0047
A23CR16	1901-0047		DIODE-SWITCHING 20V 75MA 10NS	28480	1901-0047
A23CR17	1901-0535	2	DIODE-SCHOTTKY	28480	1901-0535
A23CR18	1901-0047		DIODE-SWITCHING 20V 75MA 10NS	28480	1901-0047
A23E1	9170-0029		CORE-SHIELDING BEAD	0188G	56-590-65A2/4A
A23E2	9170-0029		CORE-SHIELDING BEAD	0188G	56-590-65A2/4A
A23E3	9170-0029		CORE-SHIELDING BEAD	0188G	56-590-65A2/4A
A23E4	9170-0029		CORE-SHIELDING BEAD	0188G	56-590-65A2/4A
A23E5	9170-0029		CORE-SHIELDING BEAD	0188G	56-590-65A2/4A
A23E6	9170-0029		CORE-SHIELDING BEAD	0188G	56-590-65A2/4A
A23E7	9170-0029		CORE-SHIELDING BEAD	0188G	56-590-65A2/4A
A23E8	9170-0029		CORE-SHIELDING BEAD	0188G	56-590-65A2/4A

See introduction to this section for ordering information

Scans by ARTEK MEDIA =>

Table 6-2. Replaceable Parts

Reference Designation	HP Part Number	Qty	Description	Mfr Code	Mfr Part Number
A23L1	9140-0112	2	COIL-MLD 4.7UH 10% Q=33 .155DX.375LG	02178	15-4425-14K
A23L2	9100-1619		COIL-MLD 6.8UH 10% Q=50 .155DX.375LG	02178	15-4435-2K
A23L3	9140-0114		COIL-MLD 10UH 10% Q=55 .155DX.375LG	02178	15-4445-2K
A23L4	9100-1624	7	COIL-MLD 30UH 5% Q=65 .155DX.375LG	02178	15-4465-1J
A23L5	9140-0179	12	COIL-MLD 22UH 10% Q=75 .155DX.375LG	02178	15-4445-7J
A23L6	9100-3854	4	COIL 400NH 5% Q=150 .30X1.016LG	28480	9100-3854
A23L7	9140-0098	4	COIL-MLD 2.2UH 10% Q=33 .155DX.375LG	02178	15-4425-10K
A23L8	9140-0178	2	COIL-MLD 12UH 10% Q=65 .155DX.375LG	02178	15-4445-3K
A23L9	9100-1619		COIL-MLD 6.8UH 10% Q=50 .155DX.375LG	02178	15-4435-2K
A23L10	9140-0114		COIL-MLD 10UH 10% Q=55 .155DX.375LG	02178	15-4445-2K
A23L11	9100-1624		COIL-MLD 30UH 5% Q=65 .155DX.375LG	02178	15-4465-1J
A23L12	9140-0179		COIL-MLD 22UH 10% Q=75 .155DX.375LG	02178	15-4445-7J
A23L13	9140-0098		COIL-MLD 2.2UH 10% Q=33 .155DX.375LG	02178	15-4425-10K
A23L14	9100-1620	3	COIL-MLD 15UH 10% Q=65 .155DX.375LG	02178	15-4445-4K
A23L15	9100-3854		COIL 400NH 5% Q=150 .30X1.016LG	28480	9100-3854
A23L16	9140-0144	5	COIL-MLD 4.7UH 10% Q=45 .095DX.25LG	02178	09-4436-8K
A23L17	9100-1624		COIL-MLD 30UH 5% Q=65 .155DX.375LG	02178	15-4465-1J
A23Q1	1854-0345		TRANSISTOR NPN 2N5179 SI TO-72 PD=200MW	02203G	2N5179
A23Q2	1854-0404		TRANSISTOR NPN SI TO-18 PD=360MW	28480	1854-0404
A23Q3	1853-0007		TRANSISTOR PNP 2N3251 SI TO-18 PD=360MW	02203G	2N3251
A23Q4	1853-0007		TRANSISTOR PNP 2N3251 SI TO-18 PD=360MW	02203G	2N3251
A23Q5	1855-0081		TRANSISTOR J-FET 2N5245 N-CHAN D-MODE SI	01698H	2N5245
A23Q6	1853-0007		TRANSISTOR PNP 2N3251 SI TO-18 PD=360MW	02203G	2N3251
A23Q7	1854-0404		TRANSISTOR NPN SI TO-18 PD=360MW	28480	1854-0404
A23Q8	1853-0007		TRANSISTOR PNP 2N3251 SI TO-18 PD=360MW	02203G	2N3251
A23Q9	1855-0081		TRANSISTOR J-FET 2N5245 N-CHAN D-MODE SI	01698H	2N5245
A23Q10	1853-0007		TRANSISTOR PNP 2N3251 SI TO-18 PD=360MW	02203G	2N3251
A23R1	0757-0441		RESISTOR 8.25K 1% .125W F TC=0+-100	03298	C4-1/8-T0-8251-F
A23R2	0757-0442		RESISTOR 10K 1% .125W F TC=0+-100	03298	C4-1/8-T0-1002-F
A23R3	0757-0403		RESISTOR 121 1% .125W F TC=0+-100	03298	C4-1/8-T0-121R-F
A23R4			NOT ASSIGNED		
A23R5	0757-0405		RESISTOR 162 1% .125W F TC=0+-100	03298	C4-1/8-T0-162R-F
A23R6	0698-3431		RESISTOR 23.7 1% .125W F TC=0+-100	03888	PME55-1/8-T0-23R7-F
A23R7	0698-3427	2	RESISTOR 13.3 1% .125W F TC=0+-100	03888	PME55-1/8-T0-13R3-F
A23R8	0757-0399	5	RESISTOR 82.5 1% .125W F TC=0+-100	03298	C4-1/8-T0-82R5-F
A23R9	0698-3155		RESISTOR 4.64K 1% .125W F TC=0+-100	03298	C4-1/8-T0-4641-F
A23R10	0757-0280		RESISTOR 1K 1% .125W F TC=0+-100	03298	C4-1/8-T0-1001-F
A23R11	0757-0438		RESISTOR 5.11K 1% .125W F TC=0+-100	03298	C4-1/8-T0-5111-F
A23R12	0757-0443		RESISTOR 11K 1% .125W F TC=0+-100	03298	C4-1/8-T0-1102-F
A23R13	0698-3446		RESISTOR 383 1% .125W F TC=0+-100	03298	C4-1/8-T0-383R-F
A23R14	0757-0346		RESISTOR 10 1% .125W F TC=0+-100	03298	C4-1/8-T0-10R0-F
A23R15	0698-3438		RESISTOR 147 1% .125W F TC=0+-100	03298	C4-1/8-T0-147R-F
A23R16	0698-3444		RESISTOR 316 1% .125W F TC=0+-100	03298	C4-1/8-T0-316R-F
A23R17	0698-3442		RESISTOR 237 1% .125W F TC=0+-100	03298	C4-1/8-T0-237R-F
A23R18	0757-0279		RESISTOR 3.16K 1% .125W F TC=0+-100	03298	C4-1/8-T0-3161-F
A23R19	0757-0200		RESISTOR 5.62K 1% .125W F TC=0+-100	03298	C4-1/8-T0-5621-F
A23R20	0757-0199		RESISTOR 21.5K 1% .125W F TC=0+-100	03298	C4-1/8-T0-2152-F
A23R21	0757-0199		RESISTOR 21.5K 1% .125W F TC=0+-100	03298	C4-1/8-T0-2152-F
A23R22	0757-0442		RESISTOR 10K 1% .125W F TC=0+-100	03298	C4-1/8-T0-1002-F
A23R23	0757-0440		RESISTOR 7.5K 1% .125W F TC=0+-100	03298	C4-1/8-T0-7501-F
A23R24	0698-3136		RESISTOR 17.8K 1% .125W F TC=0+-100	03298	C4-1/8-T0-1782-F
A23R25	0757-0465		RESISTOR 100K 1% .125W F TC=0+-100	03298	C4-1/8-T0-1003-F
A23R26	2100-3094		RESISTOR-TRMR 100K 10% C SIDE-ADJ 17-TRN	73138	89PR100K
A23R27	0757-0290		RESISTOR 6.19K 1% .125W F TC=0+-100	0299E	MF4C1/8-T0-6191-F
A23R28	0757-0290		RESISTOR 6.19K 1% .125W F TC=0+-100	0299E	MF4C1/8-T0-6191-F
A23R29	0757-0280		RESISTOR 1K 1% .125W F TC=0+-100	03298	C4-1/8-T0-1001-F
A23R30	0757-0400	2	RESISTOR 90.9 1% .125W F TC=0+-100	03298	C4-1/8-T0-90R9-F
A23R31	2100-3052	2	RESISTOR-TRMR 50 20% C SIDE-ADJ 17-TRN	73138	89PR50
A23R32			NOT ASSIGNED		
A23R33	0757-0438		RESISTOR 5.11K 1% .125W F TC=0+-100	03298	C4-1/8-T0-5111-F
A23R34	0757-0443		RESISTOR 11K 1% .125W F TC=0+-100	03298	C4-1/8-T0-1102-F
A23R35	0698-3155		RESISTOR 4.64K 1% .125W F TC=0+-100	03298	C4-1/8-T0-4641-F
A23R36	0757-0280		RESISTOR 1K 1% .125W F TC=0+-100	03298	C4-1/8-T0-1001-F
A23R37	0698-3447		RESISTOR 422 1% .125W F TC=0+-100	03298	C4-1/8-T0-422R-F
A23R38	0698-3439		RESISTOR 178 1% .125W F TC=0+-100	03298	C4-1/8-T0-178R-F
A23R39	0698-3444		RESISTOR 316 1% .125W F TC=0+-100	03298	C4-1/8-T0-316R-F
A23R40	0698-3442		RESISTOR 237 1% .125W F TC=0+-100	03298	C4-1/8-T0-237R-F
A23R41	0757-0279		RESISTOR 3.16K 1% .125W F TC=0+-100	03298	C4-1/8-T0-3161-F
A23R42	0757-0199		RESISTOR 21.5K 1% .125W F TC=0+-100	03298	C4-1/8-T0-2152-F
A23R43	0757-0200		RESISTOR 5.62K 1% .125W F TC=0+-100	03298	C4-1/8-T0-5621-F
A23R44	0757-0442		RESISTOR 10K 1% .125W F TC=0+-100	03298	C4-1/8-T0-1002-F
A23R45	0757-0401		RESISTOR 100 1% .125W F TC=0+-100	03298	C4-1/8-T0-101-F
A23R46	0757-0401		RESISTOR 100 1% .125W F TC=0+-100	03298	C4-1/8-T0-101-F
A23R47	0757-0346		RESISTOR 10 1% .125W F TC=0+-100	03298	C4-1/8-T0-10R0-F
A23R48	0757-0440		RESISTOR 7.5K 1% .125W F TC=0+-100	03298	C4-1/8-T0-7501-F
A23R49	0757-0290		RESISTOR 6.19K 1% .125W F TC=0+-100	0299E	MF4C1/8-T0-6191-F
A23R50			NOT ASSIGNED		
A23R51	0757-0346		RESISTOR 10 1% .125W F TC=0+-100	03298	C4-1/8-T0-10R0-F
A23R52	0757-0290		RESISTOR 6.19K 1% .125W F TC=0+-100	0299E	MF4C1/8-T0-6191-F
A23R53	0698-3440		RESISTOR 196 1% .125W F TC=0+-100	03298	C4-1/8-T0-196R-F

See introduction to this section for ordering information

Scans by ARTEK MEDIA =>

Table 6-2. Replaceable Parts

Reference Designation	HP Part Number	Qty	Description	Mfr Code	Mfr Part Number
A23R54	0698-0082		RESISTOR 464 1% .125W F TC=0+-100	03298	C4-1/8-T0-4640-F
A23R55	0757-0199		RESISTOR 21.5K 1% .125W F TC=0+-100	03298	C4-1/8-T0-2152-F
A23R56	0757-0424		RESISTOR 1.1K 1% .125W F TC=0+-100	03298	C4-1/8-T0-1101-F
A23R57	0757-0180		RESISTOR 31.6 1% .125W F TC=0+-100	01606	CC
A23R58	0757-0279		RESISTOR 3.16K 1% .125W F TC=0+-100	03298	C4-1/8-T0-3161-F
A23R59	0757-0180		RESISTOR 31.6 1% .125W F TC=0+-100	01606	CC
A23R60	0757-0279		RESISTOR 3.16K 1% .125W F TC=0+-100	03298	C4-1/8-T0-3161-F
A23VR1	1902-0048		DIODE-ZNR 6.81V 5% DO-7 PD=.4W TC=+.043%	02236	FZ7844
A23Y1, A23Y2	0410-0450	1	CRYSTAL,MATCHED SET OF 4, 21.4 MHZ (MATCHED SET OF FOUR, INCLUDES A27Y1,2)	28480	0410-0450
A24	08557-60009	1	ASSEMBLY, STEP GAIN AMPLIFIER	28480	08557-60009
A24C1	0160-2055		CAPACITOR-FXD .01UF +80-20% 100VDC CER	28480	0160-2055
A24C2	0160-2055		CAPACITOR-FXD .01UF +80-20% 100VDC CER	28480	0160-2055
A24C3	0160-2055		CAPACITOR-FXD .01UF +80-20% 100VDC CER	28480	0160-2055
A24C4	0160-2055		CAPACITOR-FXD .01UF +80-20% 100VDC CER	28480	0160-2055
A24C5	0160-2055		CAPACITOR-FXD .01UF +80-20% 100VDC CER	28480	0160-2055
A24C6	0160-2055		CAPACITOR-FXD .01UF +80-20% 100VDC CER	28480	0160-2055
A24C7	0160-2055		CAPACITOR-FXD .01UF +80-20% 100VDC CER	28480	0160-2055
A24C8	0160-2055		CAPACITOR-FXD .01UF +80-20% 100VDC CER	28480	0160-2055
A24C9	0160-2055		CAPACITOR-FXD .01UF +80-20% 100VDC CER	28480	0160-2055
A24C10	0160-2055		CAPACITOR-FXD .01UF +80-20% 100VDC CER	28480	0160-2055
A24C11	0160-2055		CAPACITOR-FXD .01UF +80-20% 100VDC CER	28480	0160-2055
A24C12	0180-0291		CAPACITOR-FXD 1UF+-10% 35VDC TA	04203	150D105X9035A2
A24C13	0160-2055		CAPACITOR-FXD .01UF +80-20% 100VDC CER	28480	0160-2055
A24C14	0160-2055		CAPACITOR-FXD .01UF +80-20% 100VDC CER	28480	0160-2055
A24C15	0160-2055		CAPACITOR-FXD .01UF +80-20% 100VDC CER	28480	0160-2055
A24C16	0160-3457	3	CAPACITOR-FXD 2000PF +-10% 250VDC CER	28480	0160-3457
A24C17	0160-2055		CAPACITOR-FXD .01UF +80-20% 100VDC CER	28480	0160-2055
A24C18	0160-2055		CAPACITOR-FXD .01UF +80-20% 100VDC CER	28480	0160-2055
A24C19	0160-3457		CAPACITOR-FXD 2000PF +-10% 250VDC CER	28480	0160-3457
A24C20	0160-2055		CAPACITOR-FXD .01UF +80-20% 100VDC CER	28480	0160-2055
A24C21	0160-2055		CAPACITOR-FXD .01UF +80-20% 100VDC CER	28480	0160-2055
A24C22	0160-3457		CAPACITOR-FXD 2000PF +-10% 250VDC CER	28480	0160-3457
A24C23	0160-2055		CAPACITOR-FXD .01UF +80-20% 100VDC CER	28480	0160-2055
A24C24	0160-2199		CAPACITOR-FXD 30PF +-5% 300VDC	28480	0160-2199
A24C25	0160-2199		CAPACITOR-FXD 30PF +-5% 300VDC	28480	0160-2199
A24CR1	1901-0050		DIODE-SWITCHING 80V 200MA 2NS DO-7	28480	1901-0050
A24CR2	1901-0050		DIODE-SWITCHING 80V 200MA 2NS DO-7	28480	1901-0050
A24CR3	1901-1070		DIODE-PIN	28480	1901-1070
A24CR4	1901-1070		DIODE-PIN	28480	1901-1070
A24CR5	1901-1070		DIODE-PIN	28480	1901-1070
A24CR6	1901-1070		DIODE-PIN	28480	1901-1070
A24E1	9170-0029		CORE-SHIELDING BEAD	01886	56-590-65A2/4A
A24E2	9170-0029		CORE-SHIELDING BEAD	01886	56-590-65A2/4A
A24E3	9170-0029		CORE-SHIELDING BEAD	01886	56-590-65A2/4A
A24L1	9140-0179		COIL-MLD 22UH 10% Q=75 .155DX.375LG	02178	15-4445-7J
A24L2	9140-0179		COIL-MLD 22UH 10% Q=75 .155DX.375LG	02178	15-4445-7J
A24L3	9140-0179		COIL-MLD 22UH 10% Q=75 .155DX.375LG	02178	15-4445-7J
A24L4	9140-0179		COIL-MLD 22UH 10% Q=75 .155DX.375LG	02178	15-4445-7J
A24L5	9140-0179		COIL-MLD 22UH 10% Q=75 .155DX.375LG	02178	15-4445-7J
A24L6	9140-0179		COIL-MLD 22UH 10% Q=75 .155DX.375LG	02178	15-4445-7J
A24L7	9140-0179		COIL-MLD 22UH 10% Q=75 .155DX.375LG	02178	15-4445-7J
A24L8	9140-0179		COIL-MLD 22UH 10% Q=75 .155DX.375LG	02178	15-4445-7J
A24L9	9100-2260	1	COIL-MLD 1.8UH 10% Q=32 .095DX.25LG	28480	9100-2260
A24L10	9140-0158	5	COIL-MLD 1UH 10% Q=32 .095DX.25LG	02178	09-4426-6K
A24Q1	1853-0007		TRANSISTOR PNP 2N3251 SI TO-18 PD=360MW	02036	2N3251
A24Q2	1854-0345		TRANSISTOR NPN 2N5179 SI TO-72 PD=200MW	02036	2N5179
A24Q3	1853-0007		TRANSISTOR PNP 2N3251 SI TO-18 PD=360MW	02036	2N3251
A24Q4	1854-0345		TRANSISTOR NPN 2N5179 SI TO-72 PD=200MW	02036	2N5179
A24Q5	1853-0007		TRANSISTOR PNP 2N3251 SI TO-18 PD=360MW	02036	2N3251
A24Q6	1854-0345		TRANSISTOR NPN 2N5179 SI TO-72 PD=200MW	02036	2N5179
A24Q7	1853-0007		TRANSISTOR PNP 2N3251 SI TO-18 PD=360MW	02036	2N3251
A24Q8	1853-0007		TRANSISTOR PNP 2N3251 SI TO-18 PD=360MW	02036	2N3251
A24Q9	1853-0007		TRANSISTOR PNP 2N3251 SI TO-18 PD=360MW	02036	2N3251
A24R1	2100-3103	3	RESISTOR-TRMR 10K 10% C SIDE-ADJ 17-TRN	73138	89PR10K
A24R2	2100-3103		RESISTOR-TRMR 10K 10% C SIDE-ADJ 17-TRN	73138	89PR10K
A24R3	2100-3058		RESISTOR-TRMR 50K 10% C SIDE-ADJ 17-TRN	73138	89PR50K
A24R4	2100-3061	1	RESISTOR-TRMR 500K 10% C SIDE-ADJ 17-TRN	73138	89PR500K
A24R5	2100-3103		RESISTOR-TRMR 10K 10% C SIDE-ADJ 17-TRN	73138	89PR10K

See introduction to this section for ordering information

Scans by ARTEK MEDIA =>

Table 6-2. Replaceable Parts

Reference Designation	HP Part Number	Qty	Description	Mfr Code	Mfr Part Number
A24R6	2100-3056	1	RESISTOR-TRMR 5K 10% C SIDE-ADJ 17-TRN	73138	89PR5K
A24R7			NOT ASSIGNED		
A24R8	0757-0288		RESISTOR 9.09K 1% .125W F TC=0+-100	0299E	MF4C1/8-T0-9091-F
A24R9	0698-3457		RESISTOR 316K 1% .125W F TC=0+-100	0160G	CC
A24R10	0757-0346		RESISTOR 10 1% .125W F TC=0+-100	03298	C4-1/8-T0-10R0-F
A24R11	0757-0279		RESISTOR 3.16K 1% .125W F TC=0+-100	03298	C4-1/8-T0-3161-F
A24R12	0698-3444		RESISTOR 316 1% .125W F TC=0+-100	03298	C4-1/8-T0-316R-F
A24R13	0757-0288		RESISTOR 9.09K 1% .125W F TC=0+-100	0299E	MF4C1/8-T0-9091-F
A24R14	0757-0395	5	RESISTOR 56.2 1% .125W F TC=0+-100	03298	C4-1/8-T0-56R2-F
A24R15	0757-0346		RESISTOR 10 1% .125W F TC=0+-100	03298	C4-1/8-T0-10R0-F
A24R16	0757-0346		RESISTOR 10 1% .125W F TC=0+-100	03298	C4-1/8-T0-10R0-F
A24R17	0757-0290		RESISTOR 6.19K 1% .125W F TC=0+-100	0299E	MF4C1/8-T0-6191-F
A24R18	0757-0346		RESISTOR 10 1% .125W F TC=0+-100	03298	C4-1/8-T0-10R0-F
A24R19	0757-0290		RESISTOR 6.19K 1% .125W F TC=0+-100	0299E	MF4C1/8-T0-6191-F
A24R20	0757-0279		RESISTOR 3.16K 1% .125W F TC=0+-100	03298	C4-1/8-T0-3161-F
A24R21	0698-3162		RESISTOR 46.4K 1% .125W F TC=0+-100	03298	C4-1/8-T0-4642-F
A24R22	0757-0279		RESISTOR 3.16K 1% .125W F TC=0+-100	03298	C4-1/8-T0-3161-F
A24R23	0698-3444		RESISTOR 316 1% .125W F TC=0+-100	03298	C4-1/8-T0-316R-F
A24R24	0757-0395		RESISTOR 56.2 1% .125W F TC=0+-100	03298	C4-1/8-T0-56R2-F
A24R25	0757-0280		RESISTOR 1K 1% .125W F TC=0+-100	03298	C4-1/8-T0-1001-F
A24R26	0757-0417		RESISTOR 562 1% .125W F TC=0+-100	03298	C4-1/8-T0-562R-F
A24R27	0757-0280		RESISTOR 1K 1% .125W F TC=0+-100	03298	C4-1/8-T0-1001-F
A24R28	0757-0279		RESISTOR 3.16K 1% .125W F TC=0+-100	03298	C4-1/8-T0-3161-F
A24R29	0698-3444		RESISTOR 316 1% .125W F TC=0+-100	03298	C4-1/8-T0-316R-F
A24R30	0757-0395		RESISTOR 56.2 1% .125W F TC=0+-100	03298	C4-1/8-T0-56R2-F
A24R31	0757-0280		RESISTOR 1K 1% .125W F TC=0+-100	03298	C4-1/8-T0-1001-F
A24R32	0757-0420		RESISTOR 750 1% .125W F TC=0+-100	03298	C4-1/8-T0-751-F
A24R33	0757-0280		RESISTOR 1K 1% .125W F TC=0+-100	03298	C4-1/8-T0-1001-F
A24R34	0757-0279		RESISTOR 3.16K 1% .125W F TC=0+-100	03298	C4-1/8-T0-3161-F
A24R35	0698-3444		RESISTOR 316 1% .125W F TC=0+-100	03298	C4-1/8-T0-316R-F
A24R36	0757-0395		RESISTOR 56.2 1% .125W F TC=0+-100	03298	C4-1/8-T0-56R2-F
A24R37	0757-0280		RESISTOR 1K 1% .125W F TC=0+-100	03298	C4-1/8-T0-1001-F
A24R38	0757-0420		RESISTOR 750 1% .125W F TC=0+-100	03298	C4-1/8-T0-751-F
A24R39	0757-0280		RESISTOR 1K 1% .125W F TC=0+-100	03298	C4-1/8-T0-1001-F
A24R40	0698-3440		RESISTOR 196 1% .125W F TC=0+-100	03298	C4-1/8-T0-196R-F
A24R41	0698-3162		RESISTOR 46.4K 1% .125W F TC=0+-100	03298	C4-1/8-T0-4642-F
A24R42	0698-3162		RESISTOR 46.4K 1% .125W F TC=0+-100	03298	C4-1/8-T0-4642-F
A24S1	3101-0973	1	SWITCH-SL DPDT-N8 MINTR .5A 125VAC/DC PC	0487F	GF126-0018
	1251-0600	11	CONTACT-CONN U/W-POST-TYPE MALE DPSLDR	28480	1251-0600
A25	08565-20105	1	BOARD, BYPASS	28480	08565-20105
A26			NOT ASSIGNED		
A27	08565-60033	1	ASSEMBLY, BANDWIDTH FILTER NO. 1	28480	08565-60033
A27C1	0160-2055		CAPACITOR-FXD .01UF +80-20% 100VDC CER	28480	0160-2055
A27C2	0160-0127		CAPACITOR-FXD 1UF +-20% 25VDC CER	28480	0160-0127
A27C3	0160-2236		CAPACITOR-FXD 1PF +-.25PF 500VDC	28480	0160-2236
A27C4	0160-2055		CAPACITOR-FXD .01UF +80-20% 100VDC CER	28480	0160-2055
A27C5	0160-3459		CAPACITOR-FXD .02UF +-20% 100VDC CER	28480	0160-3459
A27C6	0160-2055		CAPACITOR-FXD .01UF +80-20% 100VDC CER	28480	0160-2055
A27C7	0160-2055		CAPACITOR-FXD .01UF +80-20% 100VDC CER	28480	0160-2055
A27C8	0160-2207		CAPACITOR-FXD 300PF +-5% 300VDC MICA0+70	28480	0160-2207
A27C9	0160-2055		CAPACITOR-FXD .01UF +80-20% 100VDC CER	28480	0160-2055
A27C10	0160-2055		CAPACITOR-FXD .01UF +80-20% 100VDC CER	28480	0160-2055
A27C11	0160-2055		CAPACITOR-FXD .01UF +80-20% 100VDC CER	28480	0160-2055
A27C12	0160-2055		CAPACITOR-FXD .01UF +80-20% 100VDC CER	28480	0160-2055
A27C13	0160-3456		CAPACITOR-FXD 1000PF +-10% 1KVDC CER	28480	0160-3456
A27C14	0160-2257		CAPACITOR-FXD 10PF +-5% 500VDC CER0+-60	28480	0160-2257
A27C15	0121-0059		CAPACITOR-V TRMR-CER 2-8PF 350V PC-MTG	73899	DV11PR8A
A27C16	0160-2244		CAPACITOR-FXD 3PF +-.25PF 500VDC	28480	0160-2244
A27C17	0160-2055		CAPACITOR-FXD .01UF +80-20% 100VDC CER	28480	0160-2055
A27C18	0160-2055		CAPACITOR-FXD .01UF +80-20% 100VDC CER	28480	0160-2055
A27C19	0160-2055		CAPACITOR-FXD .01UF +80-20% 100VDC CER	28480	0160-2055
A27C20	0140-0194		CAPACITOR-FXD 110PF +-5% 300VDC MICA	72136	DM15F111J0300WV1CR
A27C21	0160-3431		CAPACITOR-FXD 6.8PF +-.5PF 500VDC	28480	0160-3431
A27C22	0160-4084		CAPACITOR-FXD .1UF +-20% 50VDC CER	28480	0160-4084
A27C23	0121-0036		CAPACITOR-V TRMR-CER 5.5-18PF 350V	73899	DV11PR18A
A27C24			NOT ASSIGNED		
A27C25	0121-0446		CAPACITOR-V TRMR-CER 4.5-20PF 160V	0146H	7S-TR1KO-19 4.5-20 PF, N750
A27C36	0160-2055		CAPACITOR-FXD .01UF +80-20% 100VDC CER	28480	0160-2055
A27C27	0160-2055		CAPACITOR-FXD .01UF +80-20% 100VDC CER	28480	0160-2055
A27C28	0160-2055		CAPACITOR-FXD .01UF +80-20% 100VDC CER	28480	0160-2055
A27C29	0160-3456		CAPACITOR-FXD 1000PF +-10% 1KVDC CER	28480	0160-3456
A27C30	0160-2055		CAPACITOR-FXD .01UF +80-20% 100VDC CER	28480	0160-2055
A27C31	0160-3459		CAPACITOR-FXD .02UF +-20% 100VDC CER	28480	0160-3459

See introduction to this section for ordering information

Scans by ARTEK MEDIA =>

Table 6-2. Replaceable Parts

Reference Designation	HP Part Number	Qty	Description	Mfr Code	Mfr Part Number
A27C32	0160-2055		CAPACITOR-FXD .01UF +80-20% 100VDC CER	28480	0160-2055
A27C33	0160-2207		CAPACITOR-FXD 300PF +-5% 300VDC MICA0+70	28480	0160-2207
A27C34	0160-2055		CAPACITOR-FXD .01UF +80-20% 100VDC CER	28480	0160-2055
A27C35	0160-2055		CAPACITOR-FXD .01UF +80-20% 100VDC CER	28480	0160-2055
A27C36	0160-2055		CAPACITOR-FXD .01UF +80-20% 100VDC CER	28480	0160-2055
A27C37	0160-2257		CAPACITOR-FXD 10PF +-5% 500VDC CER0+-60	28480	0160-2257
A27C38	0121-0059		CAPACITOR-V TRMR-CER 2-8PF 350V PC-MTG	73899	DV11PR8A
A27C39	0160-2241		CAPACITOR-FXD 2.2PF +-.25PF 500VDC	28480	0160-2241
A27C40	0160-2055		CAPACITOR-FXD .01UF +80-20% 100VDC CER	28480	0160-2055
A27C41	0160-3456		CAPACITOR-FXD 1000PF +-10% 1KVDC CER	28480	0160-3456
A27C42	0160-2055		CAPACITOR-FXD .01UF +80-20% 100VDC CER	28480	0160-2055
A27C43	0160-3431		CAPACITOR-FXD 6.8PF +-.5PF 500VDC	28480	0160-3431
A27C44	0140-0194		CAPACITOR-FXD 110PF +-5% 300VDC MICA	72136	DM15F111J0300WV1CR
A27C45	0121-0036		CAPACITOR-V TRMR-CER 5.5-18PF 350V	73899	DV11PR18A
A27C46	0160-4084		CAPACITOR-FXD .1UF +-20% 50VDC CER	28480	0160-4084
A27C47	0160-2055		CAPACITOR-FXD .01UF +80-20% 100VDC CER	28480	0160-2055
A27C48	0160-2055		CAPACITOR-FXD .01UF +80-20% 100VDC CER	28480	0160-2055
A27C49	0160-2055		CAPACITOR-FXD .01UF +80-20% 100VDC CER	28480	0160-2055
A27C50	0160-2055		CAPACITOR-FXD .01UF +80-20% 100VDC CER	28480	0160-2055
A27C51	0160-2055		CAPACITOR-FXD .01UF +80-20% 100VDC CER	28480	0160-2055
A27C52	0160-2055		CAPACITOR-FXD .01UF +80-20% 100VDC CER	28480	0160-2055
A27C53	0160-2055		CAPACITOR-FXD .01UF +80-20% 100VDC CER	28480	0160-2055
A27C54	0121-0446		CAPACITOR-V TRMR-CER 4.5-20PF 160V	0146H	73-TRIKO-19 4.5-20 PF, N750
A27C55	0160-2055		CAPACITOR-FXD .01UF +80-20% 100VDC CER	28480	0160-2055
A27C56 THRU A27C59			NOT ASSIGNED		
A27C60	0160-2055		CAPACITOR-FXD .01UF +80-20% 100VDC CER	28480	0160-2055
A27C61	0160-2055		CAPACITOR-FXD .01UF +80-20% 100VDC CER	28480	0160-2055
A27C62	0160-2055		CAPACITOR-FXD .01UF +80-20% 100VDC CER	28480	0160-2055
A27C63	0160-2055		CAPACITOR-FXD .01UF +80-20% 100VDC CER	28480	0160-2055
A27C64	0160-3533		CAPACITOR-FXD 470PF +-5% 300VDC MICA0+70	28480	0160-3533
A27C65	0160-2055		CAPACITOR-FXD .01UF +80-20% 100VDC CER	28480	0160-2055
A27C66	0160-2055		CAPACITOR-FXD .01UF +80-20% 100VDC CER	28480	0160-2055
A27C67	0160-2055		CAPACITOR-FXD .01UF +80-20% 100VDC CER	28480	0160-2055
A27C68 THRU A27C72			NOT ASSIGNED		
A27C73	0121-0452		CAPACITOR-V TRMR-AIR 1.3-5.4PF 250V	74970	187-0103-005
A27C74	0121-0452		CAPACITOR-V TRMR-AIR 1.3-5.4PF 250V	74970	187-0103-005
A27CR1	1901-0047		DIODE-SWITCHING 20V 75MA 10NS	28480	1901-0047
A27CR2	1901-0047		DIODE-SWITCHING 20V 75MA 10NS	28480	1901-0047
A27CR3	1901-1070		DIODE;PIN	28480	1901-1070
A27CR4	1901-1070		DIODE;PIN	28480	1901-1070
A27CR5	1901-1070		DIODE;PIN	28480	1901-1070
A27CR6	1901-0047		DIODE-SWITCHING 20V 75MA 10NS	28480	1901-0047
A27CR8	1901-1070		DIODE;PIN	28480	1901-1070
A27CR9	1901-0047		DIODE-SWITCHING 20V 75MA 10NS	28480	1901-0047
A27CR10	1901-0047		DIODE-SWITCHING 20V 75MA 10NS	28480	1901-0047
A27CR11	1901-1070		DIODE;PIN	28480	1901-1070
A27CR12	1901-1070		DIODE;PIN	28480	1901-1070
A27CR13	1901-0047		DIODE-SWITCHING 20V 75MA 10NS	28480	1901-0047
A27CR14	1901-0047		DIODE-SWITCHING 20V 75MA 10NS	28480	1901-0047
A27CR15	1901-0047		DIODE-SWITCHING 20V 75MA 10NS	28480	1901-0047
A27CR16	1901-0047		DIODE-SWITCHING 20V 75MA 10NS	28480	1901-0047
A27CR17	1901-0535		DIODE-SCHOTTKY	28480	1901-0535
A27E1	9170-0029		CORE-SHIELDING BEAD	0188G	56-590-65A2/4A
A27E2	9170-0029		CORE-SHIELDING BEAD	0188G	56-590-65A2/4A
A27E3	9170-0029		CORE-SHIELDING BEAD	0188G	56-590-65A2/4A
A27E4	9170-0029		CORE-SHIELDING BEAD	0188G	56-590-65A2/4A
A27E5	9170-0029		CORE-SHIELDING BEAD	0188G	56-590-65A2/4A
A27E6	9170-0029		CORE-SHIELDING BEAD	0188G	56-590-65A2/4A
A27E7	9170-0029		CORE-SHIELDING BEAD	0188G	56-590-65A2/4A
A27E8	9170-0029		CORE-SHIELDING BEAD	0188G	56-590-65A2/4A
A27L1	9140-0112		COIL-MLD 4.7UH 10% Q=33 .155DX.375LG	0217B	15-4425-14K
A27L2	9100-1619		COIL-MLD 6.8UH 10% Q=50 .155DX.375LG	0217B	15-4435-2K
A27L3	9140-0114		COIL-MLD 10UH 10% Q=55 .155DX.375LG	0217B	15-4445-2K
A27L4	9100-1624		COIL-MLD 30UH 5% Q=65 .155DX.375LG	0217B	15-4465-1J
A27L5	9140-0179		COIL-MLD 22UH 10% Q=75 .155DX.375LG	0217B	15-4445-7J
A27L6	9100-3854		COIL 400NH 5% Q=150 .3DX1.016LG	28480	9100-3854
A27L7	9140-0098		COIL-MLD 2.2UH 10% Q=33 .155DX.375LG	0217B	15-4425-10K
A27L8	9140-0178		COIL-MLD 12UH 10% Q=65 .155DX.375LG	0217B	15-4445-3K
A27L9	9100-1619		COIL-MLD 6.8UH 10% Q=50 .155DX.375LG	0217B	15-4435-2K
A27L10	9140-0114		COIL-MLD 10UH 10% Q=55 .155DX.375LG	0217B	15-4445-2K
A27L11	9100-1624		COIL-MLD 30UH 5% Q=65 .155DX.375LG	0217B	15-4465-1J
A27L12	9140-0179		COIL-MLD 22UH 10% Q=75 .155DX.375LG	0217B	15-4445-7J
A27L13	9140-0098		COIL-MLD 2.2UH 10% Q=33 .155DX.375LG	0217B	15-4425-10K
A27L14	9100-1620		COIL-MLD 15UH 10% Q=65 .155DX.375LG	0217B	15-4445-4K
A27L15	9100-3854		COIL 400NH 5% Q=150 .3DX1.016LG	28480	9100-3854

See introduction to this section for ordering information

Scans by ARTEK MEDIA =>

Table 6-2. Replaceable Parts

Reference Designation	HP Part Number	Qty	Description	Mfr Code	Mfr Part Number
A27L16	9140-0144		COIL-MLD 4.7UH 10% Q=45 .095DX.25LG	02178	09-4436-8K
A27L17	9100-1624		COIL-MLD 30UH 5% Q=65 .155DX.375LG	02178	15-4465-1J
A27Q1	1854-0345		TRANSISTOR NPN 2N5179 SI TO-72 PD=200MW	0203G	2N5179
A27Q2	1854-0404		TRANSISTOR NPN SI TO-18 PD=360MW	28480	1854-0404
A27Q3	1853-0007		TRANSISTOR PNP 2N3251 SI TO-18 PD=360MW	0203G	2N3251
A27Q4	1853-0007		TRANSISTOR PNP 2N3251 SI TO-18 PD=360MW	0203G	2N3251
A27Q5	1855-0081		TRANSISTOR J-FET 2N5245 N-CHAN D-MODE SI	0169H	2N5245
A27Q6	1853-0007		TRANSISTOR PNP 2N3251 SI TO-18 PD=360MW	0203G	2N3251
A27Q7	1854-0404		TRANSISTOR NPN SI TO-18 PD=360MW	28480	1854-0404
A27Q8	1853-0007		TRANSISTOR PNP 2N3251 SI TO-18 PD=360MW	0203G	2N3251
A27Q9	1855-0081		TRANSISTOR J-FET 2N5245 N-CHAN D-MODE SI	0169H	2N5245
A27Q10	1853-0007		TRANSISTOR PNP 2N3251 SI TO-18 PD=360MW	0203G	2N3251
A27R1	0757-0441		RESISTOR 8.25K 1% .125W F TC=0+-100	0329B	C4-1/8-T0-8251-F
A27R2	0757-0442		RESISTOR 10K 1% .125W F TC=0+-100	0329B	C4-1/8-T0-1002-F
A27R3	0757-0402		RESISTOR 110 1% .125W F TC=0+-100	0329B	C4-1/8-T0-111-F
A27R4			NOT ASSINGED		
A27R5	0757-0405		RESISTOR 162 1% .125W F TC=0+-100	0329B	C4-1/8-TO-162R-F
A27R6	0698-3431		RESISTOR 23.7 1% .125W F TC=0+-100	03888	PME55-1/8-TO-23R7-F
A27R7	0698-3427		RESISTOR 13.3 1% .125W F TC=0+-100	03888	PME55-1/8-T0-13R3-F
A27R8	0757-0399		RESISTOR 82.5 1% .125W F TC=0+-100	0329B	C4-1/8-T0-82R5-F
A27R9	0698-3155		RESISTOR 4.64K 1% .125W F TC=0+-100	0329B	C4-1/8-T0-4641-F
A27R10	0757-0280		RESISTOR 1K 1% .125W F TC=0+-100	0329B	C4-1/8-T0-1001-F
A27R11	0757-0438		RESISTOR 5.11K 1% .125W F TC=0+-100	0329B	C4-1/8-T0-5111-F
A27R12	0757-0443		RESISTOR 11K 1% .125W F TC=0+-100	0329B	C4-1/8-T0-1102-F
A27R13	0698-3446		RESISTOR 383 1% .125W F TC=0+-100	0329B	C4-1/8-T0-383R-F
A27R14	0757-0346		RESISTOR 10 1% .125W F TC=0+-100	0329B	C4-1/8-T0-10R0-F
A27R15	0698-3438		RESISTOR 147 1% .125W F TC=0+-100	0329B	C4-1/8-T0-147R-F
A27R16	0698-3444		RESISTOR 316 1% .125W F TC=0+-100	0329B	C4-1/8-T0-316R-F
A27R17	0698-3442		RESISTOR 237 1% .125W F TC=0+-100	0329B	C4-1/8-T0-237R-F
A27R18	0757-0279		RESISTOR 3.16K 1% .125W F TC=0+-100	0329B	C4-1/8-T0-3161-F
A27R19	0757-0279		RESISTOR 3.16K 1% .125W F TC=0+-100	0329B	C4-1/8-T0-3161-F
A27R20	0757-0199		RESISTOR 21.5K 1% .125W F TC=0+-100	0329B	C4-1/8-T0-2152-F
A27R21	0757-0199		RESISTOR 21.5K 1% .125W F TC=0+-100	0329B	C4-1/8-T0-2152-F
A27R22	0757-0442		RESISTOR 10K 1% .125W F TC=0+-100	0329B	C4-1/8-T0-1002-F
A27R23	0757-0440		RESISTOR 7.5K 1% .125W F TC=0+-100	0329B	C4-1/8-T0-7501-F
A27R24	0698-3136		RESISTOR 17.8K 1% .125W F TC=0+-100	0329B	C4-1/8-T0-1782-F
A27R25	0757-0465		RESISTOR 100K 1% .125W F TC=0+-100	0329B	C4-1/8-T0-1003-F
A27R26	2100-3094		RESISTOR-TRMR 100K 10% C SIDE-ADJ 17-TRN	73138	89PR100K
A27R27	0757-0290		RESISTOR 6.19K 1% .125W F TC=0+-100	0299E	MF4C1/8-T0-6191-F
A27R28	0757-0290		RESISTOR 6.19K 1% .125W F TC=0+-100	0299E	MF4C1/8-T0-6191-F
A27R29	0757-0280		RESISTOR 1K 1% .125W F TC=0+-100	0329B	C4-1/8-T0-1001-F
A27R30	0757-0400		RESISTOR 90.9 1% .125W F TC=0+-100	0329B	C4-1/8-T0-90R9-F
A27R31	2100-3052		RESISTOR-TRMR 50 20% C SIDE-ADJ 17-TRN	73138	89PR50
A27R32			NOT ASSIGNED		
A27R33	0757-0438		RESISTOR 5.11K 1% .125W F TC=0+-100	0329B	C4-1/8-T0-5111-F
A27R34	0757-0443		RESISTOR 11K 1% .125W F TC=0+-100	0329B	C4-1/8-T0-1102-F
A27R35	0698-3155		RESISTOR 4.64K 1% .125W F TC=0+-100	0329B	C4-1/8-T0-4641-F
A27R36	0757-0280		RESISTOR 1K 1% .125W F TC=0+-100	0329B	C4-1/8-T0-1001-F
A27R37	0698-3447		RESISTOR 422 1% .125W F TC=0+-100	0329B	C4-1/8-T0-422R-F
A27R38	0698-3439		RESISTOR 178 1% .125W F TC=0+-100	0329B	C4-1/8-T0-178R-F
A27R39	0698-3444		RESISTOR 316 1% .125W F TC=0+-100	0329B	C4-1/8-T0-316R-F
A27R40	0698-3442		RESISTOR 237 1% .125W F TC=0+-100	0329B	C4-1/8-T0-237R-F
A27R41	0757-0279		RESISTOR 3.16K 1% .125W F TC=0+-100	0329B	C4-1/8-T0-3161-F
A27R42	0757-0199		RESISTOR 21.5K 1% .125W F TC=0+-100	0329B	C4-1/8-T0-2152-F
A27R43	0757-0290		RESISTOR 6.19K 1% .125W F TC=0+-100	0299E	MF4C1/8-T0-6191-F
A27R44	0757-0442		RESISTOR 10K 1% .125W F TC=0+-100	0329B	C4-1/8-T0-1002-F
A27R45	0757-0401		RESISTOR 100 1% .125W F TC=0+-100	0329B	C4-1/8-T0-101-F
A27R46	0757-0401		RESISTOR 100 1% .125W F TC=0+-100	0329B	C4-1/8-T0-101-F
A27R47	0757-0346		RESISTOR 10 1% .125W F TC=0+-100	0329B	C4-1/8-T0-10R0-F
A27R48	0757-0440		RESISTOR 7.5K 1% .125W F TC=0+-100	0329B	C4/1/8-TO-7501-F
A27R49	0757-0290		RESISTOR 6.19K 1% .125W F TC=0+-100	0299E	MF4C1/8-TO-6191-F
A27R50			NOT ASSIGNED		
A27R51	0757-0346		RESISTOR 10 1% .125W F TC=0+-100	0329B	C4-1/8-T0-10R0-F
A27R52	0757-0290		RESISTOR 6.19K 1% .125W F TC=0+-100	0299E	MF4C1/8-T0-6191-F
A27R53	0698-3440		RESISTOR 196 1% .125W F TC=0+-100	0329B	C4-1/8-T0-196R-F
A27R54	0698-0082		RESISTOR 464 1% .125W F TC=0+-100	0329B	C4-1/8-T0-4640-F
A27R55	0757-0199		RESISTOR 21.5K 1% .125W F TC=0+-100	0329B	C4-1/8-T0-2152-F
A27R56	0757-0422		RESISTOR 909 1% .125W F TC=0+-100	0329B	C4-1/8-T0-909R-F
A27R57	0757-0180		RESISTOR 31.6 1% .125W F TC=0+-100	0160G	CC
A27R58	0757-0279		RESISTOR 3.16K 1% .125W F TC=0+-100	0329B	C4-1/8-T0-3161-F
A27R59	0757-0180		RESISTOR 31.6 1% .125W F TC=0+-100	0160G	CC
A27R60	0757-0279		RESISTOR 3.16K 1% .125W F TC=0+-100	0329B	C4-1/8-T0-3161-F
A27VR1	1902-0048		DIODE-ZNR 6.81V 5% DO-7 PD=.4W TC=+.043%	0223G	FZ7244
A27Y1, A27Y2	0410-0450		CRYSTAL, 21.4MHZ, MATCHED SET OF FOUR, INCLUDES A23Y1,2		
A27Y2					

See introduction to this section for ordering information

Scans by ARTEK MEDIA =>

Table 6-2. Replaceable Parts

Reference Designation	HP Part Number	Qty	Description	Mfr Code	Mfr Part Number
A28	08565-60027	1	ASSEMBLY, VARIABLE GAIN	28480	08565-60027
A28C1	0160-2207		CAPACITOR-FXD 300PF +-5% 300VDC MICA0+70	28480	0160-2207
A28C2	0140-0195		CAPACITOR-FXD 130PF +-5% 300VDC MICA	72136	DM15F131J0300WV1CR
A28C3	0140-0198	2	CAPACITOR-FXD 200PF +-5% 300VDC MICA	72136	DM15F201J0300WV1CR
A28C4	0160-2055		CAPACITOR-FXD .01UF +80-20% 100VDC CER	28480	0160-2055
A28C5	0160-2055		CAPACITOR-FXD .01UF +80-20% 100VDC CER	28480	0160-2055
A28C6	0160-2055		CAPACITOR-FXD .01UF +80-20% 100VDC CER	28480	0160-2055
A28C7	0160-2055		CAPACITOR-FXD .01UF +80-20% 100VDC CER	28480	0160-2055
A28C8	0160-2055		CAPACITOR-FXD .01UF +80-20% 100VDC CER	28480	0160-2055
A28C9	0160-2055		CAPACITOR-FXD .01UF +80-20% 100VDC CER	28480	0160-2055
A28C10	0160-2055		CAPACITOR-FXD .01UF +80-20% 100VDC CER	28480	0160-2055
A28C11	0160-2055		CAPACITOR-FXD .01UF +80-20% 100VDC CER	28480	0160-2055
A28C12	0160-2055		CAPACITOR-FXD .01UF +80-20% 100VDC CER	28480	0160-2055
A28C13	0160-2055		CAPACITOR-FXD .01UF +80-20% 100VDC CER	28480	0160-2055
A28C14	0160-2253	1	CAPACITOR-FXD 6.8PF +-.25PF 500VDC	28480	0160-2253
A28C15	0160-2236		CAPACITOR-FXD 1PF +-.25PF 500VDC	28480	0160-2236
A28C16	0160-2055		CAPACITOR-FXD .01UF +80-20% 100VDC CER	28480	0160-2055
A28C17	0160-2055		CAPACITOR-FXD .01UF +80-20% 100VDC CER	28480	0160-2055
A28C18	0160-2055		CAPACITOR-FXD .01UF +80-20% 100VDC CER	28480	0160-2055
A28C19	0160-2055		CAPACITOR-FXD .01UF +80-20% 100VDC CER	28480	0160-2055
A28C20	0160-2055		CAPACITOR-FXD .01UF +80-20% 100VDC CER	28480	0160-2055
A28C21	0160-2055		CAPACITOR-FXD .01UF +80-20% 100VDC CER	28480	0160-2055
A28C22	0160-2055		CAPACITOR-FXD .01UF +80-20% 100VDC CER	28480	0160-2055
A28C23	0160-2055		CAPACITOR-FXD .01UF +80-20% 100VDC CER	28480	0160-2055
A28C24	0160-2055		CAPACITOR-FXD .01UF +80-20% 100VDC CER	28480	0160-2055
A28C25	0160-2055		CAPACITOR-FXD .01UF +80-20% 100VDC CER	28480	0160-2055
A28C26	0160-2055		CAPACITOR-FXD .01UF +80-20% 100VDC CER	28480	0160-2055
A28C27	0160-2055		CAPACITOR-FXD .01UF +80-20% 100VDC CER	28480	0160-2055
A28C28	0160-2055		CAPACITOR-FXD .01UF +80-20% 100VDC CER	28480	0160-2055
A28C29	0160-2055		CAPACITOR-FXD .01UF +80-20% 100VDC CER	28480	0160-2055
A28C30	0160-2055		CAPACITOR-FXD .01UF +80-20% 100VDC CER	28480	0160-2055
A28C31	0160-2055		CAPACITOR-FXD .01UF +80-20% 100VDC CER	28480	0160-2055
A28C32	0160-2055		CAPACITOR-FXD .01UF +80-20% 100VDC CER	28480	0160-2055
A28C33	0160-2055		CAPACITOR-FXD .01UF +80-20% 100VDC CER	28480	0160-2055
A28C34	0160-2055		CAPACITOR-FXD .01UF +80-20% 100VDC CER	28480	0160-2055
A28C35	0160-2055		CAPACITOR-FXD .01UF +80-20% 100VDC CER	28480	0160-2055
A28C36	0160-2055		CAPACITOR-FXD .01UF +80-20% 100VDC CER	28480	0160-2055
A28C37	0160-2055		CAPACITOR-FXD .01UF +80-20% 100VDC CER	28480	0160-2055
A28CR1	1901-0639	7	DIODE-PIN 110V	28480	5082-3080
A28CR2	1901-0639		DIODE-PIN 110V	28480	5082-3080
A28CR3	1901-0047		DIODE-SWITCHING 20V 75MA 10NS	28480	1901-0047
A28CR4	1901-0047		DIODE-SWITCHING 20V 75MA 10NS	28480	1901-0047
A28CR5	1901-0047		DIODE-SWITCHING 20V 75MA 10NS	28480	1901-0047
A28CR6	1901-0047		DIODE-SWITCHING 20V 75MA 10NS	28480	1901-0047
A28CR7	1901-0047		DIODE-SWITCHING 20V 75MA 10NS	28480	1901-0047
A28CR8	1901-0639		DIODE-PIN 110V	28480	5082-3080
A28CR9	1901-0639		DIODE-PIN 110V	28480	5082-3080
A28CR10	1910-0016		DIODE-GE 60V 60MA 1US DO-7	28480	1910-0016
A28CR11	1910-0016		DIODE-GE 60V 60MA 1US DO-7	28480	1910-0016
A28CR12	1901-0047		DIODE-SWITCHING 20V 75MA 10NS	28480	1901-0047
A28E1	9170-0029		CORE-SHIELDING BEAD	01889	56-590-65A2/4A
A28E2	9170-0029		CORE-SHIELDING BEAD	01889	56-590-65A2/4A
A28E3	9170-0029		CORE-SHIELDING BEAD	01889	56-590-65A2/4A
A28E4	9170-0029		CORE-SHIELDING BEAD	01889	56-590-65A2/4A
A28L1	9100-1610	2	COIL-MLD 150NH 20% Q=50 .155DX.375LG	02178	15-4415-1M
A28L2	9100-1610		COIL-MLD 150NH 20% Q=50 .155DX.375LG	02178	15-4415-1M
A28L3	9100-1619		COIL-MLD 6.8UH 10% Q=50 .155DX.375LG	02178	15-4435-2K
A28L4	9100-1617	1	COIL-MLD 3.9UH 10% Q=33 .155DX.375LG	02178	15-4428-13K
A28L5	9100-1620		COIL-MLD 15UH 10% Q=65 .155DX.375LG	02178	15-4445-4K
A28L6	9100-1619		COIL-MLD 6.8UH 10% Q=50 .155DX.375LG	02178	15-4435-2K
A28L7	9100-1619		COIL-MLD 6.8UH 10% Q=50 .155DX.375LG	02178	15-4435-2K
A28L8	9100-1619		COIL-MLD 6.8UH 10% Q=50 .155DX.375LG	02178	15-4435-2K
A28L9	9100-1624		COIL-MLD 30UH 5% Q=65 .155DX.375LG	02178	15-4465-1J
A28Q1	1853-0007		TRANSISTOR PNP 2N3251 SI TO-18 PD=360MW	02203	2N3251
A28Q2	1853-0007		TRANSISTOR PNP 2N3251 SI TO-18 PD=360MW	02203	2N3251
A28Q3	1853-0007		TRANSISTOR PNP 2N3251 SI TO-18 PD=360MW	02203	2N3251
A28Q4	1854-0345		TRANSISTOR NPN 2N5179 SI TO-72 PD=200MW	02203	2N5179
A28Q5	1854-0404		TRANSISTOR NPN SI TO-18 PD=360MW	28480	1854-0404
A28Q6	1854-0019		TRANSISTOR NPN SI TO-18 PD=360MW	28480	1854-0019
A28Q7	1854-0247	2	TRANSISTOR NPN SI TO-39 PD=1W FT=800MHZ	28480	1854-0247
A28R1	0757-0280		RESISTOR 1K 1% .125W F TC=0+-100	03298	C4-1/8-T0-1001-F
A28R2	0698-3132		RESISTOR 261 1% .125W F TC=0+-100	03298	C4-1/8-T0-2610-F
A28R3	0683-0475	1	RESISTOR 4.7 5% .25W FC TC=-400/+500	01609	CB4765
A28R4	0698-3440		RESISTOR 196 1% .125W F TC=0+-100	03298	C4-1/8-T0-196R-F
A28R5	0757-0418		RESISTOR 619 1% .125W F TC=0+-100	03298	C4-1/8-T0-619R-F

See introduction to this section for ordering information

Scans by ARTEK MEDIA =>

Table 6-2. Replaceable Parts

Reference Designation	HP Part Number	Qty	Description	Mfr Code	Mfr Part Number
A28R6	0698-3447		RESISTOR 422 1% .125W F TC=0+-100	0329B	C4-1/8-T0-422R-F
A28R7	2100-3351		RESISTOR-TRMR 500 10% C SIDE-ADJ 1-TRN	73138	72-142-0
A28R8	0698-3440		RESISTOR 196 1% .125W F TC=0+-100	0329B	C4-1/8-T0-196R-F
A28R9	0757-0438		RESISTOR 5.11K 1% .125W F TC=0+-100	0329B	C4-1/8-T0-5111-F
A28R10	0757-0401		RESISTOR 100 1% .125W F TC=0+-100	0329B	C4-1/8-T0-101-F
A28R11	0757-0438		RESISTOR 5.11K 1% .125W F TC=0+-100	0329B	C4-1/8-T0-5111-F
A28R12	0757-0442		RESISTOR 10K 1% .125W F TC=0+-100	0329B	C4-1/8-T0-1002-F
A28R13	0698-3157		RESISTOR 19.6K 1% .125W F TC=0+-100	0329B	C4-1/8-T0-1962-F
A28R14	0698-3440		RESISTOR 196 1% .125W F TC=0+-100	0329B	C4-1/8-T0-196R-F
A28R15	0698-3437	1	RESISTOR 133 1% .125W F TC=0+-100	0329B	C4-1/8-T0-133R-F
A28R16	0757-0418		RESISTOR 619 1% .125W F TC=0+-100	0329B	C4-1/8-T0-619R-F
A28R17	0757-0418		RESISTOR 619 1% .125W F TC=0+-100	0329B	C4-1/8-T0-619R-F
A28R18	0698-0085		RESISTOR 2.61K 1% .125W F TC=0+-100	0329B	C4-1/8-T0-2611-F
A28R19*	0757-0403		RESISTOR 121 1%, 125W F TC=0+-100	0329B	C4-1/8-T0-121R-F
			*FACTORY SELECTED PART		
A28R20	0757-0278		RESISTOR 1.78K 1% .125W F TC=0+-100	0329B	C4-1/8-T0-1781-F
A28R21*	0757-0180		RESISTOR 31.6 1% .125W F TC=0+-100	0160G	CC
			*FACTORY SELECTED PART		
A28R22	0757-0428		RESISTOR 1.62K 1% .125W F TC=0+-100	0329B	C4-1/8-T0-1621-F
A28R23*	0757-0379		RESISTOR 12.1 1% .125W F TC=0+-100	0299E	MF4C1/8-T0-12R1-F
		1	*FACTORY SELECTED PART		
A28R24	0757-0428		RESISTOR 1.62K 1% .125W F TC=0+-100	03298	C4-1/8-T0-1621-F
A28R25	0698-3158		RESISTOR 23.7K 1% .125W F TC=0+-100	03298	C4-1/8-T0-2372-F
A28R26	0757-0344		RESISTOR 10 1% .125W F TC=0+-100	03298	C4-1/8-T0-10R0-F
A28R27	0698-3440		RESISTOR 196 1% .125W F TC=0+-100	03298	C4-1/8-T0-196R-F
A28R28	0757-0418		RESISTOR 619 1% .125W F TC=0+-100	0329B	C4-1/8-T0-619R-F
A28R29	0757-0444		RESISTOR 12.1K 1% .125W F TC=0+-100	0329B	C4-1/8-T0-1212-F
A28R30	0698-0085		RESISTOR 2.61K 1% .125W F TC=0+-100	0329B	C4-1/8-T0-2611-F
A28R31	0698-3440		RESISTOR 196 1% .125W F TC=0+-100	03298	C4-1/8-T0-196R-F
A28R32	0698-3444		RESISTOR 316 1% .125W F TC=0+-100	0329B	C4-1/8-T0-316R-F
A28R33	0698-3446		RESISTOR 383 1% .125W F TC=0+-100	0329B	C4-1/8-T0-383R-F
A28R34	0698-0085		RESISTOR 2.61K 1% .125W F TC=0+-100	03298	C4-1/8-T0-2611-F
A28R35	0757-0442		RESISTOR 10K 1% .125W F TC=0+-100	03298	C4-1/8-T0-1002-F
A28R36	0698-3260		RESISTOR 464K 1% .125W F TC=0+-100	0160G	CC
A28R37	0757-0346		RESISTOR 10 1% .125W F TC=0+-100	03298	C4-1/8-T0-10R0-F
A28S1	3101-2190	1	SWITCH-SL DPDT-NS MINTR 1A 125VAC PC	28480	3101-2190
A28VR1	1902-3048	1	DIODE-ZNR 3.48V 5% DO-7 PD=.4W TC=-.058%	0203G	SZ 10939-50
A29	08565-60028	1	ASSEMBLY, RF-IF MOTHERBOARD	28480	08565-60028
A29C1	0160-4297		CAPACITOR-FXD .022UF +80-20% 100VDC CER	0420J	C023F101H223Z822-CDH
A29C2	0160-4297		CAPACITOR-FXD .022UF +80-20% 100VDC CER	0420J	C023F101H223Z822-CDH
A29C3	0160-4297		CAPACITOR-FXD .022UF +80-20% 100VDC CER	0420J	C023F101H223Z822-CDH
A29C4	0160-4297		CAPACITOR-FXD .022UF +80-20% 100VDC CER	0420J	C023F101H223Z822-CDH
A29C5	0160-4297		CAPACITOR-FXD .022UF +80-20% 100VDC CER	0420J	C023F101H223Z822-CDH
A29C6	0160-4297		CAPACITOR-FXD .022UF +80-20% 100VDC CER	0420J	C023F101H223Z822-CDH
A29C7	0160-4299	1	CAPACITOR-FXD 2200PF +-20% 250VDC CER	0420J	C067F251F222M822-CDH
A29C8	0160-4297		CAPACITOR-FXD .022UF +80-20% 100VDC CER	0420J	C023F101H223Z822-CDH
A29C9	0160-4297		CAPACITOR-FXD .022UF +80-20% 100VDC CER	0420J	C023F101H223Z822-CDH
A29C10	0160-4297		CAPACITOR-FXD .022UF +80-20% 100VDC CER	0420J	C023F101H223Z822-CDH
A29C11	0160-4297		CAPACITOR-FXD .022UF +80-20% 100VDC CER	0420J	C023F101H223Z822-CDH
A29C12	0180-0097	1	CAPACITOR-FXD 47UF+-10% 35VDC TA	0420J	150D476X9035B2
A29C13	0180-0228		CAPACITOR-FXD 22UF+-10% 15VDC TA	0420J	150D226X9015B2
A29J1	1251-4458	1	CONNECTOR 50-PIN M RECTANGULAR	76381	3496-1003
A29J2	1251-4742	1	CONNECTOR 34-PIN M POST TYPE	76381	3494-1003
A29J3	1251-4736		CONNECTOR 26-PIN M RECTANGULAR	76381	3493-2003
A29J4	1200-0508		SOCKET-IC 14-CONT DIP-SLOR	06776	0002812
A29J5	1251-4051	1	CONNECTOR 10-PIN M POST TYPE	27264	22-12-2101
A29J6	1250-0835	1	CONNECTOR-RF SMC M PC 50-OHM	0331F	37JR104-2
A29R1	0698-3442		RESISTOR 237 1% .125W F TC=0+-100	03298	C4-1/8-T0-237R-F
A29R2	0757-0395		RESISTOR 56.2 1% .125W F TC=0+-100	03298	C4-1/8-T0-56R2-F
A29R3	0698-3392	1	RESISTOR 23.7 1% .5W F TC=0+-100	0552D	CMF-65-2
A29R4	0757-0464		RESISTOR 90.9K 1% .125W F TC=0+-100	03298	C4-1/8-T0-9092-F
A29R5	0757-0440		RESISTOR 7.5K 1% .125W F TC=0+-100	03298	C4-1/8-T0-7501-F
A29R6	0757-0401		RESISTOR 100 1% .125W F TC=0+-100	03298	C4-1/8-T0-101-F
A29R7	0757-0401		RESISTOR 100 1% .125W F TC=0+-100	03298	C4-1/8-T0-101-F
A29R8	0757-0346		RESISTOR 10 1% .125W F TC=0+-100	03298	C4-1/8-T0-10R0-F
A29R9	0757-0346		RESISTOR 10 1% .125W F TC=0+-100	03298	C4-1/8-T0-10R0-F
A29R10	0757-0438		RESISTOR 5.11K 1% .125W F TC=0+-100	03298	C4-1/8-T0-5111-F
A29XA1THRUA29XA10			NOT ASSIGNED		
A29XA11	1251-2035		CONNECTOR-PC EDGE 15-CONT/ROW 2-ROWS	0450G	252-15-30-300
A29XA12	1251-2035		CONNECTOR-PC EDGE 15-CONT/ROW 2-ROWS	0450G	252-15-30-300
A29XA13	1251-2035		CONNECTOR-PC EDGE 15-CONT/ROW 2-ROWS	0450G	252-15-30-300
A29XA14	1251-2035		CONNECTOR-PC EDGE 15-CONT/ROW 2-ROWS	0450G	252-15-30-300
A29XA15	1251-2035		CONNECTOR-PC EDGE 15-CONT/ROW 2-ROWS	0450G	252-15-30-300

See introduction to this section for ordering information

Scans by ARTEK MEDIA =>

Table 6-2. Replaceable Parts

Reference Designation	HP Part Number	Qty	Description	Mfr Code	Mfr Part Number
A29XA16P1	1251-1365	13	CONNECTOR-PC EDGE 22-CONT/ROW 2-ROWB	0450G	252-22-30-300
A29XA16P2	1251-0472	2	CONNECTOR-PC EDGE 6-CONT/ROW 2-ROWB	0450G	252-06-30-300
A29XA17	1251-1365		CONNECTOR-PC EDGE 22-CONT/ROW 2-ROWB	0450G	252-22-30-300
A29XA18	1251-1365		CONNECTOR-PC EDGE 22-CONT/ROW 2-ROWB	0450G	252-22-30-300
A29XA19	1251-1365		CONNECTOR-PC EDGE 22-CONT/ROW 2-ROWB	0450G	252-22-30-300
A29XA20	1251-1365		CONNECTOR-PC EDGE 22-CONT/ROW 2-ROWB	0450G	252-22-30-300
A29XA21	1251-1365		CONNECTOR-PC EDGE 22-CONT/ROW 2-ROWB	0450G	252-22-30-300
A29XA22	1251-1365		CONNECTOR-PC EDGE 22-CONT/ROW 2-ROWB	0450G	252-22-30-300
A29XA23	1251-1365		CONNECTOR-PC EDGE 22-CONT/ROW 2-ROWB	0450G	252-22-30-300
A29XA24	1251-1365		CONNECTOR-PC EDGE 22-CONT/ROW 2-POWB	0450G	252-22-30-300
A29XA25	1251-1365		CONNECTOR-PC EDGE 22-CONT/ROW 2-ROWB	0450G	252-22-30-300
A29XA26	1251-1365		CONNECTOR-PC EDGE 22-CONT/ROW 2-ROWB	0450G	252-22-30-300
A29XA27	1251-1365		CONNECTOR-PC EDGE 22-CONT/ROW 2-ROWB	0450G	252-22-30-300
A29XA28	1251-1365		CONNECTOR-PC EDGE 22-CONT/ROW 2-ROWB	0450G	252-22-30-300
A30	5086-7285 5086-6285	1	ASSEMBLY, 1ST MIXER RESTORED 5086-7285, REQUIRES EXCHANGE	28480	5086-7285
A31	5086-7259 5086-7258	1 1	ASSEMBLY, YTO (2 TO 4.5 GHZ) ASSEMBLY, YTO(ALTERNATE FOR 5086-7259	28480 28480	5086-7259 5086-7258
A32	0960-0473	1	ASSEMBLY, YTF (1.7 TO 22 GHZ)	28480	0960-0473
A33	5086-7283	1	ASSEMBLY, LIMITER	28480	5086-7283
A34	08565-60084	1	ASSEMBLY, RF ATTENUATOR	28480	08565-60084
A35	08565-60009	1	ASSEMBLY, SECOND CONVERTER	28480	08565-60009
A35J1	1250-1157	1	CONNECTOR-RF SMA FEM THD-HOLE 50-OHM	0278H	SM 220
A35L1	08558-00034	1	COUPLING, LOOP INPUT	28480	08558-00034
A35L2	08558-00033	2	COUPLING, LOOP FILTER	28480	08558-00033
A35L3	08558-00033		COUPLING, LOOP FILTER	28480	08558-00033
A35MP1	08565-20067	1	BLOCK, CAVITY	28480	08565-20067
A35MP2	08565-20069	1	CAP, OUTER ELEMENT	28480	08565-20069
A35MP3	08565-20092	1	CAP, DIELECTRIC	28480	08565-20092
A35MP4	08565-20068	1	CAP, INNER ELEMENT	28480	08565-20068
A35MP5	2200-0171	1	SCREW-MACH 4-40 .75-IN-LG 82 DEG	28480	2200-0171
A35MP6	08565-20101	1	COVER, CAVITY, SECOND CONVERTER	28480	08565-20101
A35MP7	08565-00058	1	COVER, OSCILLATOR HOUSING	28480	08565-00058
A35MP8	2740-0001	3	NUT-HEX-DBL-CHAM 10-32-THD .109-IN-THK	28480	2740-0001
A35MP9	2740-0001		NUT-HEX-DBL-CHAM 10-32-THD .109-IN-THK	28480	2740-0001
A35MP10	2740-0001		NUT-HEX-DBL-CHAM 10-32-THD .109-IN-THK	28480	2740-0001
A35MP11	2950-0078	2	NUT-HEX-DBL-CHAM 10-32-THD .067-IN-THK	0331F	HN100-11
A35MP12	3030-0422	7	SCREW-SKT HD CAP 0-80 .188-IN-LG	28480	3030-0422
A35MP13	3030-0422		SCREW-SKT HD CAP 0-80 .188-IN-LG	28480	3030-0422
A35MP14	3030-0422		SCREW-SKT HD CAP 0-80 .188-IN-LG	28480	3030-0422
A35MP15	3030-0422		SCREW-SKT HD CAP 0-80 .188-IN-LG	28480	3030-0422
A35MP16	3030-0422		SCREW-SKT HD CAP 0-80 .188-IN-LG	28480	3030-0422
A35MP17	3030-0422		SCREW-SKT HD CAP 0-80 .188-IN-LG	28480	3030-0422
A35MP18	3050-0176	3	WASHER-FL MTLC NO. 8 .188-IN-ID	9A469	AA-0107-288
A35MP19	3050-0176		WASHER-FL MTLC NO. 8 .188-IN-ID	9A469	AA-0107-288
A35MP20	3050-0176		WASHER-FL MTLC NO. 8 .188-IN-ID	9A469	AA-0107-288
A35MP21	2190-0124	7	WASHER-LK INTL T NO. 10 .195-IN-ID	0331F	LW101-30
A35MP22	2190-0124		WASHER-LK INTL T NO. 10 .195-IN-ID	0331F	LW101-30
A35MP23	2200-0105	2	SCREW-MACH 4-40 .312-IN-LG PAN-HD-POZI	28480	2200-0105
A35MP24	2200-0105		SCREW-MACH 4-40 .312-IN-LG PAN-HD-POZI	28480	2200-0105
A35MP25 THRU A35MP40	2200-0107	16	SCREW-MACH 4-40 .375-IN-LG PAN-HD-POZI	28480	2200-0107
A35MP41	2200-0113	2	SCREW-MACH 4-40 .625-IN-LG PAN-HD-POZI	28480	2200-0113
A35MP42	2200-0113		SCREW-MACH 4-40 .625-IN-LG PAN-HD-POZI	28480	2200-0113
A35MP43	2200-0119	8	SCREW-MACH 4-40 1-IN-LG PAN-HD-POZI	28480	2200-0119
A35MP44	2200-0119		SCREW-MACH 4-40 1-IN-LG PAN-HD-POZI	28480	2200-0119
A35MP45	2200-0119		SCREW-MACH 4-40 1-IN-LG PAN-HD-POZI	28480	2200-0119
A35MP46	2200-0119		SCREW-MACH 4-40 1-IN-LG PAN-HD-POZI	28480	2200-0119
A35MP47	2200-0119		SCREW-MACH 4-40 1-IN-LG PAN-HD-POZI	28480	2200-0119
A35MP48	2200-0119		SCREW-MACH 4-40 1-IN-LG PAN-HD-POZI	28480	2200-0119
A35MP49	2200-0119		SCREW-MACH 4-40 1-IN-LG PAN-HD-POZI	28480	2200-0119
A35MP50	2200-0119		SCREW-MACH 4-40 1-IN-LG PAN-HD-POZI	28480	2200-0119
A35A1	08565-60106	1	ASSEMBLY, SECOND CONVERTER OSC. HOUSING	28480	08565-60106
A35A1C1	0160-3036	2	CAPACITOR-FDTHRU 5000PF +80 -20% 200V	28480	0160-3036
A35A1C2	0160-3036		CAPACITOR-FDTHRU 5000PF +80 -20% 200V	28480	0160-3036
A35A1C3	0160-2436	1	CAPACITOR-FDTHRU 10PF 20% 200V CER	28480	0160-2436
A35A1C4	0140-0075	1	CAPACITOR-FDTHRU 22PF 10% 500V MICA	0456C	666-053-01A0-220K

See introduction to this section for ordering information

Scans by ARTEK MEDIA =>

Table 6-2. Replaceable Parts

Reference Designation	HP Part Number	Qty	Description	Mfr Code	Mfr Part Number
A35A1CR1	1901-0633	1	DIODE-SCHOTTKY	28480	1901-0633
A35A1J1			NOT ASSIGNED		
A35A1J2	1250-1435	2	CONNECTOR,RF 50-OHM SMC JACK	2493A	A-1250-1435-1
A35A1J3	1250-0829	5	CONNECTOR-RF SMC M SGL-HOLE-FR 50-OHM	0576I	50-045-4610
A35A1L1	9100-2255	2	COIL-MLO 470NH 10% Q=35 .095DX.25LG	02178	09-4426-2K
A35A1L2	08558-80009	1	COIL, SECOND CONVERTER OT	28480	08558-80009
	9170-1028	1	CORE-TUNING	0327C	066-63-518
A35A1MP1	08565-20066	1	HOUSING, OSCILLATOR CONVERTER	28480	08565-20066
A35A1MP2	08558-20074	1	INSULATOR, COUPLING POST	28480	08558-20074
A35A1MP3	2200-0151		SCREW-MACH 4-40 .75-IN-LG PAN-HD-POZI	28480	2200-0151
A35A1MP4	0380-0573	1	STANDOFF-HEX .625LG 10-32THD .312A/F AL	0217J	8396-A-1032
A35A1MP5	08558-00032	1	MOUNTING TAB, MIXER DIODE	28480	08558-00032
A35A1MP6	0360-0002	1	TERMINAL-SLDR LUG PL-MTG FOR-#2-SCR	77147	4029
A35A1MP7	0520-0173	3	SCREW-MACH 2-56 .188-IN-LG PAN-HD-POZI	28480	0520-0173
A35A1MP8	0520-0173		SCREW-MACH 2-56 .188-IN-LG PAN-HD-POZI	28480	0520-0173
A35A1MP9	0520-0173		SCREW-MACH 2-56 .188-IN-LG PAN-HD-POZI	28480	0520-0173
A35A1MP10	3030-0422		SCREW-SKT HD CAP 0-80 .188-IN-LG	28480	3030-0422
A35A1MP11	3050-0003	1	WASHER-FL NM NO. 6 .141-IN-ID .375-IN-OD	0460D	1471
A35A1R1	0757-0346		RESISTOR 10 1% .125W F TC=0+-100	03298	C4-1/8-T0-10R0-F
A35A1A1	08558-60028	1	ASSEMBLY, SECOND CONVERTER OSCILLATOR	28480	08558-60028
A35A1A1Q1	5086-4218	2	HP-21 TO-72 PKG	28480	5086-4218
A35A1A1R1	0683-4705	1	RESISTOR 47 5% .25W FC TC=-400/+500	0160G	CB4705
A35A1A1R2	0683-2715	1	RESISTOR 270 5% .25W FC TC=-400/+600	0160G	CB2715
A35A2	08565-60010	1	ASSEMBLY, SECOND CONVERTER FILTER	28480	08565-60010
A35A2C1	0180-0098	1	CAPACITOR-FXD 100UF+-20% 20VDC TA	0420J	150D107X002082
A35A2C2	0180-2208		CAPACITOR-FXD 220UF+-10% 10VDC TA	0420J	150D227X901082
A35A2CR1	1901-0050		DIODE-SWITCHING 80V 200MA 2NS DO-7	28480	1901-0050
A35A2Q1	1853-0007		TRANSISTOR PNP 2N3251 SI TO-18 PD=360MW	0203G	2N3251
A35A2R1	0698-3132		RESISTOR 261 1% .125W F TC=0+-100	03298	C4-1/8-T0-2610-F
A35A2R2	0698-3132		RESISTOR 261 1% .125W F TC=0+-100	03298	C4-1/8-T0-2610-F
A35A2R3	0698-0083		RESISTOR 1.96K 1% .125W F TC=0+-100	03298	C4-1/8-T0-1961-F
A35A2VR1	1902-3256	2	DIODE-ZNR 23.7V 5% DO-7 PD=.4W TC=+.076%	0223G	FZ7296
A36	08555-60008	1	ASSEMBLY, TUNING STABILIZER	28480	08555-60008
A36C1	0160-2437	11	CAPACITOR-FDTHRU 5000PF +80 -20% 200V	28480	0160-2437
A36C2	0160-2437		CAPACITOR-FDTHRU 5000PF +80 -20% 200V	28480	0160-2437
A36C3	0160-2437		CAPACITOR-FDTHRU 5000PF +80 -20% 200V	28480	0160-2437
A36C4	0160-2437		CAPACITOR-FDTHRU 5000PF +80 -20% 200V	28480	0160-2437
A36C5	0160-2437		CAPACITOR-FDTHRU 5000PF +80 -20% 200V	28480	0160-2437
A36C6	0160-2437		CAPACITOR-FDTHRU 5000PF +80 -20% 200V	28480	0160-2437
A36MP1	08555-20045	1	HOUSING, TUNING STABILIZER	28480	08555-20045
A36MP2	08555-00013	1	COVER, PLB AMP VCXO	28480	08555-00013
A36MP3	08555-00012	1	COVER, DISCRIMINATOR	28480	08555-00012
A36MP4	0360-0042		TERMINAL-SLDR LUG PL-MTG FOR-#6-SCR	28480	0360-0042
A36MP5	0330-0178	1	GASKET;SAMPLER 0.030" THICK	0770J	0330-0178
A36MP6	6960-0059	4	PLUG-HOLE RND-HD FOR .187-D-HOLE NYL	02768	207-120551-00
A36MP7	6960-0059		PLUG-HOLE RND-HD FOR .187-D-HOLE NYL	02768	207-120551-00
A36MP8	6960-0059		PLUG-HOLE RND-HD FOR .187-D-HOLE NYL	02768	207-120551-00
A36MP9	6960-0059		PLUG-HOLE RND-HD FOR .187-D-HOLE NYL	02768	207-120551-00
A36MP10	2200-0167	2	SCREW-MACH 4-40 .375-IN-LG 82 DEG	28480	2200-0167
A36MP11	2200-0167		SCREW-MACH 4-40 .375-IN-LG 82 DEG	28480	2200-0167
A36MP12	0624-0227	5	SCREW-TPG 4-40 .25-IN-LG PAN-HD-POZI STL	28480	0624-0227
A36MP13	0624-0227		SCREW-TPG 4-40 .25-IN-LG PAN-HD-POZI STL	28480	0624-0227
A36MP14	0624-0227		SCREW-TPG 4-40 .25-IN-LG PAN-HD-POZI STL	28480	0624-0227
A36MP15	0624-0227		SCREW-TPG 4-40 .25-IN-LG PAN-HD-POZI STL	28480	0624-0227
A36MP16	0624-0227		SCREW-TPG 4-40 .25-IN-LG PAN-HD-POZI STL	28480	0624-0227
A36MP17 THRU A36MP33	0624-0078	17	SCREW-TPG 6-32 .375-IN-LG PAN-HD-POZI	28480	0624-0078
A36A1	08555-60057	1	ASSEMBLY, DISCRIMINATOR	28480	08555-60057
A36A1C1	0160-2055		CAPACITOR-FXD .01UF +80-20% 100VDC CER	28480	0160-2055
A36A1C2	0180-0197		CAPACITOR-FXD 2.2UF+-10% 20VDC TA	0420J	150D225X9020A2
A36A1C3	0180-1743		CAPACITOR-FXD .1UF+-10% 35VDC TA	0420J	150D104X9035A2
A36A1C4	0180-0197		CAPACITOR-FXD 2.2UF+-10% 20VDC TA	0420J	150D225X9020A2
A36A1C5	0180-0197		CAPACITOR-FXD 2.2UF+-10% 20VDC TA	0420J	150D225X9020A2

See introduction to this section for ordering information

Scans by ARTEK MEDIA =>

Table 6-2. Replaceable Parts

Reference Designation	HP Part Number	Qty	Description	Mfr Code	Mfr Part Number
A36A1C6	0160-3533		CAPACITOR-FXD 470PF +-5% 300VDC MICA0+70	28480	0160-3533
A36A1C7	0160-3533		CAPACITOR-FXD 470PF +-5% 300VDC MICA0+70	28480	0160-3533
A36A1C8	0160-3538	2	CAPACITOR-FXD 750PF +-5% 100VDC MICA0+70	28480	0160-3538
A36A1C9	0160-3538		CAPACITOR-FXD 750PF +-5% 100VDC MICA0+70	28480	0160-3538
A36A1C10	0180-0197		CAPACITOR-FXD 2.2UF+-10% 20VDC TA	0420J	150D225X9020A2
A36A1C11	0160-2221	1	CAPACITOR-FXD 1300PF +-5% 300VDC	28480	0160-2221
A36A1C12*	0160-2206	1	CAPACITOR-FXD 160PF +-5% 300VDC MICAO+70	28480	0160-2206
			*FACTORY SELECTED PART		
A36A1C13	0180-0197		CAPACITOR-FXD 2.2UF+-10% 20VDC TA	0420J	150D225X9020A2
A36A1C14	0160-2055		CAPACITOR-FXD .01UF +80-20% 100VDC CER	28480	0160-2055
A36A1C15	0160-2055		CAPACITOR-FXD .01UF +80-20% 100VDC CER	28480	0160-2055
A36A1C16	0160-2055		CAPACITOR-FXD .01UF +80-20% 100VDC CER	28480	0160-2055
A36A1C17	0160-2453	1	CAPACITOR-FXD .22UF +-10% 80VDC POLYE	28480	0160-2453
A36A1C18	0180-0197		CAPACITOR-FXD 2.2UF+-10% 20VDC TA	0420J	150D225X9020A2
A36A1C19	0180-0197		CAPACITOR-FXD 2.2UF+-10% 20VDC TA	0420J	150D225X9020A2
A36A1C20	0180-0197		CAPACITOR-FXD 2.2UF+-10% 20VDC TA	0420J	150D225X9020A2
A36A1CR1	1901-0518		DIODE-SCHOTTKY	28480	1901-0518
A36A1CR2	1901-0518		DIODE-SCHOTTKY	28480	1901-0518
A36A1CR3	1902-3104		DIODE-ZNR 5.62V 5% DO-7 PD=.4W TC=+.016%	02036	8Z 10939-110
A36A1CR4	1901-0040		DIODE-SWITCHING 30V 50MA 2NS DO-35	28480	1901-0040
A36A1L1	9100-1646	2	COIL-MLD 430UH 5% Q=65 .19DX.44LG	02178	19-1331-26J
A36A1L2	9100-1647	1	COIL-MLD 470UH 5% Q=65 .19DX.44LG	02178	19-1331-27J
A36A1L3	9100-1646		COIL-MLD 430UH 5% Q=65 .19DX.44LG	02178	19-1331-26J
A36A1L4	9100-1644	1	COIL-MLD 330UH 5% Q=65 .19DX.44LG	02178	19-1331-23J
A36A1L5	9140-0210		COIL-MLD 100UH 5% Q=50 .155DX.375LG	02178	15-1315-12J
A36A1L6	9140-0210		COIL-MLD 100UH 5% Q=50 .155DX.375LG	02178	15-1315-12J
A36A1L7	9140-0210		COIL-MLD 100UH 5% Q=50 .155DX.375LG	02178	15-1315-12J
A36A1Q1	1855-0081		TRANSISTOR J-FET 2N5245 N-CHAN D-MODE SI	01698	2N5245
A36A1Q2	1854-0071		TRANSISTOR NPN SI PD=300MW FT=200MHZ	28480	1854-0071
A36A1Q3	1854-0071		TRANSISTOR NPN SI PD=300MW FT=200MHZ	28480	1854-0071
A36A1Q4	1854-0071		TRANSISTOR NPN SI PD=300MW FT=200MHZ	28480	1854-0071
A36A1Q5	1854-0071		TRANSISTOR NPN SI PD=300MW FT=200MHZ	28480	1854-0071
A36A1Q6	1854-0019		TRANSISTOR NPN SI TO-18 PD=360MW	28480	1854-0019
A36A1Q7	1854-0019		TRANSISTOR NPN SI TO-18 PD=360MW	28480	1854-0019
A36A1Q8	1853-0034		TRANSISTOR PNP SI TO-18 PD=360MW	28480	1853-0034
A36A1Q9	1853-0034		TRANSISTOR PNP SI TO-18 PD=360MW	28480	1853-0034
A36A1Q10	1854-0045	1	TRANSISTOR NPN SI TO-18 PD=500MW	28480	1854-0045
A36A1R1	0683-1055		RESISTOR 1M 5% .25W FC TC=-800/+900	01606	CB1055
A36A1R2	0698-3162		RESISTOR 46.4K 1% .125W F TC=0+-100	03298	C4-1/8-T0-4642-F
A36A1R3	0698-3152		RESISTOR 3.48K 1% .125W F TC=0+-100	03298	C4-1/8-T0-3481-F
A36A1R4	0698-3150		RESISTOR 2.37K 1% .125W F TC=0+-100	03298	C4-1/8-T0-2371-F
A36A1R5	0698-3157		RESISTOR 19.6K 1% .125W F TC=0+-100	03298	C4-1/8-T0-1962-F
A36A1R6	0757-0280		RESISTOR 1K 1% .125W F TC=0+-100	03298	C4-1/8-T0-1001-F
A36A1R7	0757-0405		RESISTOR 162 1% .125W F TC=0+-100	03298	C4-1/8-T0-162R-F
A36A1R8	0698-0083		RESISTOR 1.96K 1% .125W F TC=0+-100	03298	C4-1/8-T0-1961-F
A36A1R9	0757-0424		RESISTOR 1.1K 1% .125W F TC=0+-100	03298	C4-1/8-T0-1101-F
A36A1R10	0757-0442		RESISTOR 10K 1% .125W F TC=0+-100	03298	C4-1/8-T0-1002-F
A36A1R11	0698-3157		RESISTOR 19.6K 1% .125W F TC=0+-100	03298	C4-1/8-T0-1962-F
A36A1R12	0757-0280		RESISTOR 1K 1% .125W F TC=0+-100	03298	C4-1/8-T0-1001-F
A36A1R13	0757-0401		RESISTOR 100 1% .125W F TC=0+-100	03298	C4-1/8-T0-101-F
A36A1R14	0698-3834	9	RESISTOR 34.8 1% .125W F TC=0+-100	03298	C4-1/8-T0-34R8-F
A36A1R15	0757-0401		RESISTOR 100 1% .125W F TC=0+-100	03298	C4-1/8-T0-101-F
A36A1R16	0757-0401		RESISTOR 100 1% .125W F TC=0+-100	03298	C4-1/8-T0-101-F
A36A1R17	0698-3155		RESISTOR 4.64K 1% .125W F TC=0+-100	03298	C4-1/8-T0-4641-F
A36A1R18	0698-3155		RESISTOR 4.64K 1% .125W F TC=0+-100	03298	C4-1/8-T0-4641-F
A36A1R19	0698-3157		RESISTOR 19.6K 1% .125W F TC=0+-100	03298	C4-1/8-T0-1962-F
A36A1R20	0698-3157		RESISTOR 19.6K 1% .125W F TC=0+-100	03298	C4-1/8-T0-1962-F
A36A1R21	0757-0438		RESISTOR 5.11K 1% .125W F TC=0+-100	03298	C4-1/8-T0-5111-F
A36A1R22	0757-0438		RESISTOR 5.11K 1% .125W F TC=0+-100	03298	C4-1/8-T0-5111-F
A36A1R23	0757-0438		RESISTOR 5.11K 1% .125W F TC=0+-100	03298	C4-1/8-T0-5111-F
A36A1R24	0757-0401		RESISTOR 100 1% .125W F TC=0+-100	03298	C4-1/8-T0-101-F
A36A1R25	0757-0439		RESISTOR 6.81K 1% .125W F TC=0+-100	03298	C4-1/8-T0-6811-F
A36A1R26	0757-0442		RESISTOR 10K 1% .125W F TC=0+-100	03298	C4-1/8-T0-1002-F
A36A1R27	0698-3154		RESISTOR 4.22K 1% .125W F TC=0+-100	03298	C4-1/8-T0-4221-F
A36A1R28	0757-0442		RESISTOR 10K 1% .125W F TC=0+-100	03298	C4-1/8-T0-1002-F
A36A1R29	0757-0401		RESISTOR 100 1% .125W F TC=0+-100	03298	C4-1/8-T0-101-F
A36A1R30	0757-0442		RESISTOR 10K 1% .125W F TC=0+-100	03298	C4-1/8-T0-1002-F
A36A1R31	0757-0401		RESISTOR 100 1% .125W F TC=0+-100	03298	C4-1/8-T0-101-F
A36A1R32	0698-3155		RESISTOR 4.64K 1% .125W F TC=0+-100	03298	C4-1/8-T0-4641-F
A36A1U1	1821-0001	1	TRANSISTOR ARRAY	0192A	CA3046
A36A1U2	1820-0327	1	IC GATE TTL NAND QUAD 2-INP	02230	7401PC
A36A2	08555-60099	1	ASSEMBLY, VOLTAGE CONTROLLED CRYSTAL OSC (VCXO)	28480	08555-60099

See introduction to this section for ordering information

Scans by ARTEK MEDIA =>

Table 6-2. Replaceable Parts

Reference Designation	HP Part Number	Qty	Description	Mfr Code	Mfr Part Number
A36A2C1	0160-3094	1	CAPACITOR-FXD .1UF +-10% 100VDC CER	28480	0160-3094
A36A2C2	0121-0452		CAPACITOR-V TRMR-AIR 1.3-5.4PF 250V	74970	187-0103-005
A36A2C3	0121-0451	2	CAPACITOR-V TRMR-AIR 1.7-11PF 250V	74970	187-0106-005
A36A2C4	0160-2055		CAPACITOR-FXD .01UF +80-20% 100VDC CER	28480	0160-2055
A36A2C5	0160-2055		CAPACITOR-FXD .01UF +80-20% 100VDC CER	28480	0160-2055
A36A2C6			NOT ASSIGNED		
A36A2C7	0160-2055		CAPACITOR-FXD .01UF +80-20% 100VDC CER	28480	0160-2055
A36A2C8*	0140-0199	1	CAPACITOR-FXD 240PF +-5% 300VDC MICA	72136	DM15F241J0300WV1CR
			*FACTORY SELECTED PART		
A36A2C9	0160-2204		CAPACITOR-FXD 100PF +-5% 300VDC MICA0+70	28480	0160-2204
A26A2C10	0140-0198		CAPACITOR-FXD 200PF +-5% 300VDC MICA	72136	DM15F201J0300WVICR
A36A2C11	0180-0197		CAPACITOR-FXD 2.2UF+-10% 20VDC TA	0420J	150D225X9020A2
A36A2C12	0180-0197		CAPACITOR-FXD 2.2UF+-10% 20VDC TA	0420J	150D225X9020A2
A36A2C13	0180-0291		CAPACITOR-FXD 1UF+-10% 35VDC TA	0420J	150D105X9035A2
A36A2C14	0180-0291		CAPACITOR-FXD 1UF+-10% 35VDC TA	0420J	150D105X9035A2
A36A2C15	0180-0197		CAPACITOR-FXD 2.2UF+-10% 20VDC TA	0420J	150D225X9020A2
A36A2C16	0121-0451		CAPACITOR-V TRMR-AIR 1.7-11PF 250V	74970	187-0106-005
A36A2C17	0180-0229		CAPACITOR-FXD 33UF+-10% 10VDC TA	0420J	150D336X9010B2
A36A2C18*	0160-2202	1	CAPACITOR-FXD 75PF +-5% 300VDC	28480	0160-2202
			*FACTORY SELECTED PART		
A36A2CR1	0122-0221	4	DIODE-VVC 100PF 10% C4/C25-MIN=2 BVR=30V	02030	8MV315-221
A36A2CR2	0122-0221		DIODE-VVC 100PF 10% C4/C25-MIN=2 BVR=30V	02030	8MV315-221
A36A2CR3	0122-0221		DIODE-VVC 100PF 10% C4/C25-MIN=2 BVR=30V	02030	8MV315-221
A36A2CR4	0122-0221		DIODE-VVC 100PF 10% C4/C25-MIN=2 BVR=30V	02030	8MV315-221
A36A2CR5	1901-0040		DIODE-SWITCHING 30V 50MA 2NS DO-35	28480	1901-0040
A36A2CR6	1901-0040		DIODE-SWITCHING 30V 50MA 2NS DO-35	28480	1901-0040
A36A2CR7	1901-0040		DIODE-SWITCHING 30V 50MA 2NS DO-35	28480	1901-0040
A36A2CR8	1901-0025	1	DIODE-GEN PRP 100V 200MA DO-7	28480	1901-0025
A36A2CR9	1901-0040		DIODE-SWITCHING 30V 50MA 2NS DO-35	28480	1901-0040
A36A2E1	9170-0029		CORE-SHIELDING BEAD	01880	56-590-65A2/4A
A36A2L1	9100-1656	1	COIL-MLD 1.3MH 5% Q=60 .215DX.56LG	02178	22-1312-22J
A36A2L2	9100-3156	1	COIL-MLD 47UH 5% Q=65 .592LG SRF=9MHZ	K3105	556-7120-34 MODIFIED
A36A2L3	9140-0137	4	COIL-MLD 1MH 5% Q=60 .19DX.44LG SRF=3MHZ	02178	19-1331-35J
A36A2L4	9140-0137		COIL-MLD 1MH 5% Q=60 .19DX.44LG SRF=3MHZ	02178	19-1331-35J
A36A2L5	9140-0137		COIL-MLD 1MH 5% Q=60 .19DX.44LG SRF=3MHZ	02178	19-1331-35J
A36A2L6	9140-0137		COIL-MLD 1MH 5% Q=60 .19DX.44LG SRF=3MHZ	02178	19-1331-35J
A36A2Q1	1854-0071		TRANSISTOR NPN SI PD=300MW FT=200MHZ	28480	1854-0071
A36A2Q2	1854-0071		TRANSISTOR NPN SI PD=300MW FT=200MHZ	28480	1854-0071
A36A2Q3	1854-0071		TRANSISTOR NPN SI PD=300MW FT=200MHZ	28480	1854-0071
A36A2Q4	1855-0020		TRANSISTOR J-FET N-CHAN D-MODE TO-18 SI	28480	1855-0020
A36A2Q5	1854-0019		TRANSISTOR NPN SI TO-18 PD=360MW	28480	1854-0019
A36A2Q6	1853-0010	1	TRANSISTOR PNP SI TO-18 PD=360MW	28480	1853-0010
A36A2Q7	1854-0332	1	TRANSISTOR NPN SI TO-39 PD=1W FT=800MHZ	28480	1854-0332
A36A2R1	0757-0280		RESISTOR 1K 1% .125W F TC=0+-100	03298	C4-1/8-T0-1001-F
A36A2R2	0757-0280		RESISTOR 1K 1% .125W F TC=0+-100	03298	C4-1/8-T0-1001-F
A36A2R3	0698-3247	1	RESISTOR 4.53K .25% .125W F TC=0+-50	03298	NC55
A36A2R4	0698-7828	1	RESISTOR 4.37K .25% .125W F TC=0+-100	0299E	MF52C1/4-T0-4371-C
A36A2R5	0757-0428		RESISTOR 1.62K 1% .125W F TC=0+-100	03298	C4-1/8-T0-1621-F
A36A2R6	0757-0428		RESISTOR 1.62K 1% .125W F TC=0+-100	03298	C4-1/8-T0-1621-F
A36A2R7	0698-3155		RESISTOR 4.64K 1% .125W F TC=0+-100	03298	C4-1/8-T0-4641-F
A36A2R8			NOT ASSIGNED		
A36A2R9	0698-3153	3	RESISTOR 3.83K 1% .125W F TC=0+-100	03298	C4-1/8-T0-3831-F
A36A2R10	0757-0440		RESISTOR 7.5K 1% .125W F TC=0+-100	03298	C4-1/8-T0-7501-F
A36A2R11	0757-0438		RESISTOR 5.11K 1% .125W F TC=0+-100	03298	C4-1/8-T0-5111-F
A36A2R12	0757-0438		RESISTOR 5.11K 1% .125W F TC=0+-100	03298	C4-1/8-T0-5111-F
A36A2R13			NOT ASSIGNED		
A36A2R14			NOT ASSIGNED		
A36A2R15	0698-3151		RESISTOR 2.87K 1% .125W F TC=0+-100	03298	C4-1/8-T0-2871-F
A36A2R16	0757-0280		RESISTOR 1K 1% .125W F TC=0+-100	03298	C4-1/8-T0-1001-F
A36A2R17	0698-0083		RESISTOR 1.96K 1% .125W F TC=0+-100	03298	C4-1/8-T0-1961-F
A36A2R18	0683-1005	1	RESISTOR 10 5% .25W FC TC=-400/+500	01600	CB1005
A36A2R19	0757-0459		RESISTOR 56.2K 1% .125W F TC=0+-100	03298	C4-1/8-T0-5622-F
A36A2R20	0698-3408	1	RESISTOR 2.15K 1% .5W F TC=0+-100	0552D	CMF-65-2
A36A2R21	0757-0279		RESISTOR 3.16K 1% .125W F TC=0+-100	03298	C4-1/8-T0-3161-F
A36A2R22	0757-0411	1	RESISTOR 332 1% .125W F TC=0+-100	03298	C4-1/8-T0-332R-F
A36A2R23	0698-3156		RESISTOR 14.7K 1% .125W F TC=0+-100	03298	C4-1/8-T0-1472-F
A36A2R24	0757-0444		RESISTOR 12.1K 1% .125W F TC=0+-100	03298	C4-1/8-T0-1212-F
A36A2R25	0757-0416		RESISTOR 511 1% .125W F TC=0+-100	03298	C4-1/8-T0-511R-F
A36A2R26*	0698-3156	17	RESISTOR 14.7K 1% .125W F TC=0+-100	03298	C4-1/8-T0-1472-F
			*FACTORY SELECTED PART		
A36A2R27	2100-2650	1	RESISTOR-TRMR 200K 10% C TOP-ADJ 1-TRN	73138	62-214-1
A36A2RT1	0837-0075	1	THERMISTOR DISC 500-OHM TC=-3.9%/C-DEG	15454	2DB501 10%
A36A2U1	1826-0261		IC 741 OP AMP	28480	1826-0261

See introduction to this section for ordering information

Scans by ARTEK MEDIA =>

Table 6-2. Replaceable Parts

Reference Designation	HP Part Number	Qty	Description	Mfr Code	Mfr Part Number
A36A2W1	08555-60018	1	CABLE ASSEMBLY, PULSE AMPLIFIER	28480	08555-60018
A36A2XY1	1200-0770	1	SOCKET-XTAL 2-CONT HC-6/U DIP-SLDR	28480	1200-0770
A36A2Y1	0410-0013	1	CRYSTAL:QUARTZ 1MHZ	28480	0410-0013
A36A3	5086-7162	1	ASSEMBLY, SAMPLER	28480	5086-7162
A37	08565-60011	1	ASSEMBLY, THIRD CONVERTER	28480	08565-60011
A37C1	08565-20062	6	TUNING SCREW	28480	08565-20062
A37C2	08565-20062		TUNING SCREW	28480	08565-20062
A37C3	08565-20062		TUNING SCREW	28480	08565-20062
A37C4	08565-20062		TUNING SCREW	28480	08565-20062
A37C5	08565-20062		TUNING SCREW	28480	08565-20062
A37C6	08565-20062		TUNING SCREW	28480	08565-20062
A37C7	0160-2437		CAPACITOR-FDTHRU 5000PF +80 -20% 200V	28480	0160-2437
A37C8	0160-2437		CAPACITOR-FDTHRU 5000PF +80 -20% 200V	28480	0160-2437
A37C9	0160-2437		CAPACITOR-FDTHRU 5000PF +80 -20% 200V	28480	0160-2437
A37C10	0160-2437		CAPACITOR-FDTHRU 5000PF +80 -20% 200V	28480	0160-2437
A37C11	0160-2437		CAPACITOR-FDTHRU 5000PF +80 -20% 200V	28480	0160-2437
A37C12	0140-0076	1	CAPACITOR-FDTHRU 330PF 10% 500V MICA	0456C	666-053-01A0-331K
A37E1	9170-0029		CORE-SHIELDING BEAD	0188G	56-590-65A2/4A
A37E2	08565-20063	6	CONTACT, FILTER	28480	08565-20063
A37E3	08565-20063		CONTACT, FILTER	28480	08565-20063
A37E4	08565-20063		CONTACT, FILTER	28480	08565-20063
A37E5	08565-20063		CONTACT, FILTER	28480	08565-20063
A37E6	08565-20063		CONTACT, FILTER	28480	08565-20063
A37E7	08565-20063		CONTACT, FILTER	28480	08565-20063
A37J1	1250-0829		CONNECTOR-RF SMC M SGL-HOLE-FR 50-OHM	0576I	50-045-4610
A37J2	1250-1435		CONNECTOR,RF 50-OHM SMC JACK	2493A	A-1250-1435-1
A37J3	1250-0829		CONNECTOR-RF SMC M SGL-HOLE-FR 50-OHM	0576I	50-045-4610
A37J4	1250-0829		CONNECTOR-RF SMC M SGL-HOLE-FR 50-OHM	0576I	50-045-4610
A37J5	1250-0829		CONNECTOR-RF SMC M SGL-HOLE-FR 50-OHM	0576I	50-045-4610
A37L1	08565-60057	6	COIL/FILTER ASSEMBLY	28480	08565-60057
A37L2	08565-60057		COIL/FILTER ASSEMBLY	28480	08565-60057
A37L3	08565-60057		COIL/FILTER ASSEMBLY	28480	08565-60057
A37L4	08565-60057		COIL/FILTER ASSEMBLY	28480	08565-60057
A37L5	08565-60057		COIL/FILTER ASSEMBLY	28480	08565-60057
A37L6	08565-60057		COIL/FILTER ASSEMBLY	28480	08565-60057
A37MP1	08565-20011	1	HOUSING, THIRD CONVERTER	28480	08565-20011
A37MP2	08565-00063	1	GASKET, THIRD CONVERTER	28480	08565-00063
A37MP3	08565-00014	1	COVER, THIRD CONVERTER	28480	08565-00014
A37MP4	2950-0078		NUT-HEX-DBL-CHAM 10-32-THD .067-IN-THK	0331F	HN100-11
A37MP5	3050-0022	6	WASHER-FL MTLC 5/16 IN .318-IN-ID	28480	3050-0022
A37MP6	3050-0022		WASHER-FL MTLC 5/16 IN .318-IN-ID	28480	3050-0022
A37MP7	3050-0022		WASHER-FL MTLC 5/16 IN .318-IN-ID	28480	3050-0022
A37MP8	3050-0022		WASHER-FL MTLC 5/16 IN .318-IN-ID	28480	3050-0022
A37MP9	3050-0022		WASHER-FL MTLC 5/16 IN .318-IN-ID	28480	3050-0022
A37MP10	3050-0022		WASHER-FL MTLC 5/16 IN .318-IN-ID	28480	3050-0022
A37MP11	2950-0007	6	NUT-HEX-DBL-CHAM 5/16-32-THD .094-IN-THK	0460D	9001
A37MP12	2950-0007		NUT-HEX-DBL-CHAM 5/16-32-THD .094-IN-THK	0460D	9001
A37MP13	2950-0007		NUT-HEX-DBL-CHAM 5/16-32-THD .094-IN-THK	0460D	9001
A37MP14	2950-0007		NUT-HEX-DBL-CHAM 5/16-32-THD .094-IN-THK	0460D	9001
A37MP15	2950-0007		NUT-HEX-DBL-CHAM 5/16-32-THD .094-IN-THK	0460D	9001
A37MP16	2950-0007		NUT-HEX-DBL-CHAM 5/16-32-THD .094-IN-THK	0460D	9001
A37MP17	2260-0002		NUT-HEX-DBL-CHAM 4-40-THD .062-IN-THK	28480	2260-0002
A37MP18	2260-0002		NUT-HEX-DBL-CHAM 4-40-THD .062-IN-THK	28480	2260-0002
A37MP19	2260-0002		NUT-HEX-DBL-CHAM 4-40-THD .062-IN-THK	28480	2260-0002
A37MP20	2260-0002		NUT-HEX-DBL-CHAM 4-40-THD .062-IN-THK	28480	2260-0002
A37MP21	2260-0002		NUT-HEX-DBL-CHAM 4-40-THD .062-IN-THK	28480	2260-0002
A37MP22	2260-0002		NUT-HEX-DBL-CHAM 4-40-THD .062-IN-THK	28480	2260-0002
A37MP23	2190-0124		WASHER-LK INTL T NO. 10 .195-IN-ID	0331F	LW101-30
A37MP24	2190-0124		WASHER-LK INTL T NO. 10 .195-IN-ID	0331F	LW101-30
A37MP25	2190-0124		WASHER-LK INTL T NO. 10 .195-IN-ID	0331F	LW101-30
A37MP26	2190-0124		WASHER-LK INTL T NO. 10 .195-IN-ID	0331F	LW101-30
A37MP27	2190-0124		WASHER-LK INTL T NO. 10 .195-IN-ID	0331F	LW101-30
A37MP28 THRU A37MP71	2200-0103		SCREW-MACH 4-40 .25-IN-LG PAN-HD-POZI	28480	2200-0103
	0360-0042	2	TERMINAL-SLDR LUG PL-MTG FOR-#6-SCR	28480	0360-0042
	0890-0098	1	TUBING-FLEX .032-ID TFE .016-WALL	09795	I-SW
A37A1	08565-60014	1	ASSEMBLY, THIRD CONVERTER AMPLIFIER	28480	08565-60014

See introduction to this section for ordering information

Scans by ARTEK MEDIA =>

Table 6-2. Replaceable Parts

Reference Designation	HP Part Number	Qty	Description	Mfr Code	Mfr Part Number
A37A1C1	0160-3873	2	CAPACITOR-FXD 4.7PF +-.5PF 200VDC	28480	0160-3873
A37A1C2	0160-3878	5	CAPACITOR-FXD 1000PF +-20% 100VDC CER	28480	0160-3878
A37A1C3			NOT ASSIGNED		
A37A1C4	0160-3879		CAPACITOR-FXD .01UF +-20% 100VDC CER	28480	0160-3879
A37A1C5	0160-3878		CAPACITOR-FXD 1000PF +-20% 100VDC CER	28480	0160-3878
A37A1C6	0160-3873		CAPACITOR-FXD 4.7PF +0.5PF 200VDC	28480	0160-3873
A37A1L1	9100-0346	1	COIL-MLD 50NH 20% Q=40 .095DX.25LG	28480	9100-0346
A37A1MP1	1200-0172	1	INSULATOR-XSTR DAP-GL	28480	1200-0172
A37A1Q1	5086-4218		TC21 IN TO-72 PKG	28480	5086-4218
A37A1Q2	1853-0007		TRANSISTOR PNP 2N3251 SI TO-18 PD=360MW	0203G	2N3251
A37A1R1	0698-3449		RESISTOR 28.7K 1% .125W F TC=0+-100	03298	C4-1/8-T0-2872-F
A37A1R2	0698-3160		RESISTOR 31.6K 1% .125W F TC=0+-100	03298	C4-1/8-T0-3162-F
A37A1R3	0757-0442		RESISTOR 10K 1% .125W F TC=0+-100	03298	C4-1/8-T0-1002-F
A37A1R4	0757-0418		RESISTOR 619 1% .125W F TC=0+-100	03298	C4-1/8-T0-619R-F
A37A1R5	0757-0420		RESISTOR 750 1% .125W F TC=0+-100	03298	C4-1/8-T0-751-F
A37A2	08565-60013	1	ASSEMBLY, THIRD CONVERTER MIXER	28480	08565-60013
A37A2C1	0160-3890	1	CAPACITOR-FXD 68PF +-10% 100VDC CER0+-30	28480	0160-3890
A37A2CR1	1901-1085		DIODE-SCHOTTKY	28480	1901-1085
A37A2CR2	1901-1085		DIODE-SCHOTTKY	28480	1901-1085
A37A2L1	9100-2259	1	COIL-MLD 1.5UH 10% Q=32 .095DX.25LG	02178	09-4436-2K
A37A2L2	9100-2255		COIL-MLD 470NH 10% Q=35 .095DX.25LG	02178	09-4426-2K
A37A2L3	9100-2251	2	COIL-MLD 220NH 10% Q=32 .095DX.25LG	02178	09-4416-5K
A37A3	08565-60012	1	ASSEMBLY, THIRD CONVERTER OSCILLATOR	28480	08565-60012
A37A3C1	0160-3456		CAPACITOR-FXD 1000PF +-10% 1KVDC CER	28480	0160-3456
A37A3C2	0160-3456		CAPACITOR-FXD 1000PF +-10% 1KVDC CER	28480	0160-3456
A37A3C3	0160-3878		CAPACITOR-FXD 1000PF +-20% 100VDC CER	28480	0160-3878
A37A3C4	0160-3875		CAPACITOR-FXD 22PF +-5% 200VDC CER0+-30	28480	0160-3875
A37A3C5	0160-4516	1	CAPACITOR-FXD 15PF +-5% 200VDC CER0+-30	28480	0160-4516
A37A3C6	0160-3456		CAPACITOR-FXD 1000PF +-10% 1KVDC CER	28480	0160-3456
A37A3C7	0160-3878		CAPACITOR-FXD 1000PF +-20% 100VDC CER	28480	0160-3878
A37A3C8	0160-3456		CAPACITOR-FXD 1000PF +-10% 1KVDC CER	28480	0160-3456
A37A3C9	0160-3878		CAPACITOR-FXD 1000PF +-20% 100VDC CER	28480	0160-3878
A37A3C10	0160-3456		CAPACITOR-FXD 1000PF +-10% 1KVDC CER	28480	0160-3456
A37A3C11	0160-3456		CAPACITOR-FXD 1000PF +-10% 1KVDC CER	28480	0160-3456
A37A3C12	0160-3876	1	CAPACITOR-FXD 47PF +-20% 200VDC CER	28480	0160-3876
A37A3C13	0160-2265	1	CAPACITOR-FXD 22PF +-5% 500VDC CER0+-30	28480	0160-2265
A37A3C14	0160-2249	1	CAPACITOR-FXD 4.7PF +-.25PF 500VDC	28480	0160-2249
A37A3C15	0160-3456		CAPACITOR-FXD 1000PF +-10% 1KVDC CER	28480	0160-3456
A37A3C16	0160-3456		CAPACITOR-FXD 1000PF +-10% 1KVDC CER	28480	0160-3456
A37A3C17	0160-2055		CAPACITOR-FXD .01UF +80-20% 100VDC CER	28480	0160-2055
A37A3C18	0160-3456		CAPACITOR-FXD 1000PF +-10% 1KVDC CER	28480	0160-3456
A37A3C19	0160-3456		CAPACITOR-FXD 1000PF +-10% 1KVDC CER	28480	0160-3456
A37A3C20	0160-3456		CAPACITOR-FXD 1000PF +-10% 1KVDC CER	28480	0160-3456
A37A3C21	0160-2055		CAPACITOR-FXD .01UF +80-20% 100VDC CER	28480	0160-2055
A37A3C22	0160-3456		CAPACITOR-FXD 1000PF +-10% 1KVDC CER	28480	0160-3456
A37A3C23	0160-3456		CAPACITOR-FXD 1000PF +-10% 1KVDC CER	28480	0160-3456
A37A3C24	0160-2263	2	CAPACITOR-FXD 18PF +-5% 500VDC CER0+-30	28480	0160-2263
A37A3C25	0160-2263		CAPACITOR-FXD 18PF +-5% 500VDC CER0+-30	28480	0160-2263
A37A3C26	0160-2266	1	CAPACITOR-FXD 24PF +-5% 500VDC CER0+-30	28480	0160-2266
A37A3C27	0160-2264		CAPACITOR-FXD 20PF +-5% 500VDC CER0+-30	28480	0160-2264
A37A3CR1	1901-0639		DIODE-PIN 110V	28480	5082-3080
A37A3CR2	1901-0639		DIODE-PIN 110V	28480	5082-3080
A37A3CR3	1901-0639		DIODE-PIN 110V	28480	5082-3080
A37A3CR4	1901-0539		DIODE-SCHOTTKY	28480	1901-0539
A37A3CR5	1901-0539		DIODE-SCHOTTKY	28480	1901-0539
A37A3L1	9140-0158		COIL-MLD 1UH 10% Q=32 .095DX.25LG	02178	09-4426-6K
A37A3L2	9100-2247	3	COIL-MLD 100NH 10% Q=34 .095DX.25LG	02178	09-4416-1K
A37A3L3	9140-0158		COIL-MLD 1UH 10% Q=32 .095DX.25LG	02178	09-4426-6K
A37A3L4	08565-80001	1	COIL, 150 NH	28480	08565-80001
A37A3L5	9140-0158		COIL-MLD 1UH 10% Q=32 .095DX.25LG	02178	09-4426-6K
A37A3L6	9140-0144		COIL-MLD 4.7UH 10% Q=45 .095DX.25LG	02178	09-4436-8K
A37A3L7	9140-0158		COIL-MLD 1UH 10% Q=32 .095DX.25LG	02178	09-4426-6K
A37A3L8	9100-2251		COIL-MLD 220NH 10% Q=32 .095DX.25LG	02178	09-4416-5K
A37A3L9	9140-0144		COIL-MLD 4.7UH 10% Q=45 .095DX.25LG	02178	09-4436-8K
A37A3L10	9140-0144		COIL-MLD 4.7UH 10% Q=45 .095DX.25LG	02178	09-4436-8K
A37A3L11	9100-2247		COIL-MLD 100NH 10% Q=34 .095DX.25LG	02178	09-4416-1K
A37A3L12	9100-2247		COIL-MLD 100NH 10% Q=34 .095DX.25LG	02178	09-4416-1K
A37A3MP1	1200-0173	1	INSULATOR-XSTR DAP-GL	28480	1200-0173
A37A3Q1	1854-0345		TRANSISTOR NPN 2N5179 SI TO-72 PD=200MW	0203G	2N5179
A37A3Q2	1854-0345		TRANSISTOR NPN 2N5179 SI TO-72 PD=200MW	0203G	2N5179
A37A3Q3	1854-0247		TRANSISTOR NPN SI TO-39 PD=1W FT=800MHZ	28480	1854-0247
A37A3Q4	1853-0007		TRANSISTOR PNP 2N3251 SI TO-18 PD=360MW	0203G	2N3251

See introduction to this section for ordering information

Scans by ARTEK MEDIA =>

Table 6-2. Replaceable Parts

Reference Designation	HP Part Number	Qty	Description	Mfr Code	Mfr Part Number
A37A3R1	0698-3150		RESISTOR 2.37K 1% .125W F TC=0+-100	03298	C4-1/8-T0-2371-F
A37A3R2	0698-0083		RESISTOR 1.96K 1% .125W F TC=0+-100	03298	C4-1/8-T0-1961-F
A37A3R3	0757-1094		RESISTOR 1.47K 1% .125W F TC=0+-100	03298	C4-1/8-T0-1471-F
A37A3R4	0757-0280		RESISTOR 1K 1% .125W F TC=0+-100	03298	C4-1/8-T0-1001-F
A37A3R5	0698-3153		RESISTOR 3.83K 1% .125W F TC=0+-100	03298	C4-1/8-T0-3831-F
A37A3R6	0698-3154		RESISTOR 4.22K 1% .125W F TC=0+-100	03298	C4-1/8-T0-4221-F
A37A3R7	0698-3444		RESISTOR 316 1% .125W F TC=0+-100	03298	C4-1/8-T0-316R-F
A37A3R8	0698-3447		RESISTOR 422 1% .125W F TC=0+-100	03298	C4-1/8-T0-422R-F
A37A3R9	0698-3447		RESISTOR 422 1% .125W F TC=0+-100	03298	C4-1/8-T0-422R-F
A37A3R10	0698-3438		RESISTOR 147 1% .125W F TC=0+-100	03298	C4-1/8-T0-147R-F
A37A3R11	0757-1094		RESISTOR 1.47K 1% .125W F TC=0+-100	03298	C4-1/8-T0-1471-F
A37A3R12	0698-3429	1	RESISTOR 19.6 1% .125W F TC=0+-100	03888	PME55-1/8-T0-19R6-F
A37A3R13	0757-0458		RESISTOR 51.1K 1% .125W F TC=0+-100	03298	C4-1/8-T0-5112-F
A37A3R14	0757-0458		RESISTOR 51.1K 1% .125W F TC=0+-100	03298	C4-1/8-T0-5112-F
A37A3R15	0757-0458		RESISTOR 51.1K 1% .125W F TC=0+-100	03298	C4-1/8-T0-5112-F
A37A3R16	0757-0279		RESISTOR 3.16K 1% .125W F TC=0+-100	03298	C4-1/8-T0-3161-F
A37A3R17	0757-0279		RESISTOR 3.16K 1% .125W F TC=0+-100	03298	C4-1/8-T0-3161-F
A37A3R18	0757-0279		RESISTOR 3.16K 1% .125W F TC=0+-100	03298	C4-1/8-T0-3161-F
A37A3R19	0757-0401		RESISTOR 100 1% .125W F TC=0+-100	03298	C4-1/8-T0-101-F
A37A3R20	0698-3433	1	RESISTOR 28.7 1% .125W F TC=0+-100	03888	PME55-1/8-T0-28R7-F
A37A3R21	0757-0276	1	RESISTOR 61.9 1% .125W F TC=0+-100	03298	C4-1/8-T0-6192-F
A37A3R22	0757-0401		RESISTOR 100 1% .125W F TC=0+-100	03298	C4-1/8-T0-101-F
A37A3R23	0698-3444		RESISTOR 316 1% .125W F TC=0+-100	03298	C4-1/8-T0-316R-F
A37A3R24	0698-0084		RESISTOR 2.15K 1% .125W F TC=0+-100	03298	C4-1/8-T0-2151-F
A37A3R25	0698-3444		RESISTOR 316 1% .125W F TC=0+-100	03298	C4-1/8-T0-316R-F
A37A3R26	0757-0280		RESISTOR 1K 1% .125W F TC=0+-100	03298	C4-1/8-T0-1001-F
A37A3R27	2100-1772	1	RESISTOR-TRMR 500 5% WW TOP-ADJ 1-TRN	0374D	3345P-W50-501
A37A3R28	0698-4037	1	RESISTOR 46.4 1% .125W F TC=0+-100	03298	C4-1/8-T0-46R4-F
A37A3U1	1858-0004	1	TRANSISTOR ARRAY	0192A	CA3049
A37A3Y1	0410-1023	1	CRYSTAL, 99.333 MHZ	28480	0410-1023
A37A3Y2	0410-1024	1	CRYSTAL, 100.000 MHZ	28480	0410-1024
A37A3Y3	0410-1025	1	CRYSTAL, 100.667 MHZ	28480	0410-1025
A38	08565-60037	1	ASSEMBLY, READOUT INPUT	28480	08565-60037
A38C1	0180-2206		CAPACITOR-FXD 220UF+-10% 10VDC TA	0420J	150D227X901082
A38C2	0180-1746		CAPACITOR-FXD 15UF+-10% 20VDC TA	0420J	150D156X902082
A38C3			NOT ASSIGNED		
A38C4	0180-1746		CAPACITOR-FXD 15UF+-10% 20VDC TA	0420J	150D156X902082
A38C5	0180-2206		CAPACITOR-FXD 220UF+-10% 10VDC TA	0420J	150D227X901082
A38CR1	1901-0050		DIODE-SWITCHING 80V 200MA 2NS DO-7	28480	1901-0050
A38CR2	1901-0050		DIODE-SWITCHING 80V 200MA 2NS DO-7	28480	1901-0050
A38J1	1251-4736		CONNECTOR 26-PIN M RECTANGULAR	76381	3493-2003
A38J2	1251-4736		CONNECTOR 26-PIN M RECTANGULAR	76381	3493-2003
A38J3	1251-4737	1	CONNECTOR 50-PIN M RECTANGULAR	76381	3496-2003
A38L1	9100-2833		COIL 39UH 5% Q=70 .25DX1LG SRF=20MHZ	28480	9100-2833
A38R1	0757-0470		RESISTOR 162K 1% .125W F TC=0+-100	03298	C4-1/8-T0-1623-F
A38R2	0757-0470		RESISTOR 162K 1% .125W F TC=0+-100	03298	C4-1/8-T0-1623-F
A38R3	0757-0470		RESISTOR 162K 1% .125W F TC=0+-100	03298	C4-1/8-T0-1623-F
A38R4	0757-0465		RESISTOR 100K 1% .125W F TC=0+-100	03298	C4-1/8-T0-1003-F
A38R5	0757-0465		RESISTOR 100K 1% .125W F TC=0+-100	03298	C4-1/8-T0-1003-F
A38R6	0757-0465		RESISTOR 100K 1% .125W F TC=0+-100	03298	C4-1/8-T0-1003-F
A38R7	0698-3160		RESISTOR 31.6K 1% .125W F TC=0+-100	03298	C4-1/8-T0-3162-F
A38R8	0698-3160		RESISTOR 31.6K 1% .125W F TC=0+-100	03298	C4-1/8-T0-3162-F
A38R9	0698-3160		RESISTOR 31.6K 1% .125W F TC=0+-100	03298	C4-1/8-T0-3162-F
A38R10	0757-0467		RESISTOR 121K 1% .125W F TC=0+-100	03298	C4-1/8-T0-1213-F
A38R11	0757-0467		RESISTOR 121K 1% .125W F TC=0+-100	03298	C4-1/8-T0-1213-F
A38R12	0757-0467		RESISTOR 121K 1% .125W F TC=0+-100	03298	C4-1/8-T0-1213-F
A38R13	0757-0461		RESISTOR 68.1K 1% .125W F TC=0+-100	03298	C4-1/8-T0-6812-F
A38R14	0757-0461		RESISTOR 68.1K 1% .125W F TC=0+-100	03298	C4-1/8-T0-6812-F
A38R15	0757-0461		RESISTOR 68.1K 1% .125W F TC=0+-100	03298	C4-1/8-T0-6812-F
A38R16	0698-3243		RESISTOR 178K 1% .125W F TC=0+-100	03298	C4-1/8-T0-1783-F
A38R17	0698-3243		RESISTOR 178K 1% .125W F TC=0+-100	03298	C4-1/8-T0-1783-F
A38R18	0698-3243		RESISTOR 178K 1% .125W F TC=0+-100	03298	C4-1/8-T0-1783-F
A38R19	0698-3243		RESISTOR 178K 1% .125W F TC=0+-100	03298	C4-1/8-T0-1783-F
A38R20	0698-3152		RESISTOR 3.48K 1% .125W F TC=0+-100	03298	C4-1/8-T0-3481-F
A38R21	0757-0280		RESISTOR 1K 1% .125W F TC=0+-100	03298	C4-1/8-T0-1001-F
A38R22	0698-3243		RESISTOR 178K 1% .125W F TC=0+-100	03298	C4-1/8-T0-1783-F
A38R23	0698-3243		RESISTOR 178K 1% .125W F TC=0+-100	03298	C4-1/8-T0-1783-F
A38R24	0698-3457		RESISTOR 316K 1% .125W F TC=0+-100	0160G	CC
A38R25	0698-3457		RESISTOR 316K 1% .125W F TC=0+-100	0160G	CC

See introduction to this section for ordering information

Scans by ARTEK MEDIA =>

Table 6-2. Replaceable Parts

Reference Designation	HP Part Number	Qty	Description	Mfr Code	Mfr Part Number
A38R26	0698-3457		RESISTOR 316K 1% .125W F TC=0+-100	0160G	CC
A38R27	0698-3457		RESISTOR 316K 1% .125W F TC=0+-100	0160G	CC
A38R28	0698-3243		RESISTOR 178K 1% .125W F TC=0+-100	03298	C4-1/8-T0-1783-F
A38R29	0698-3243		RESISTOR 178K 1% .125W F TC=0+-100	03298	C4-1/8-T0-1783-F
A38R30	0698-3243		RESISTOR 178K 1% .125W F TC=0+-100	03298	C4-1/8-T0-1783-F
A38R31	0698-3455		RESISTOR 261K 1% .125W F TC=0+-100	03298	C4-1/8-T0-2613-F
A38R32	0757-0461		RESISTOR 68.1K 1% .125W F TC=0+-100	03298	C4-1/8-T0-6812-F
A38R33	0757-0461		RESISTOR 68.1K 1% .125W F TC=0+-100	03298	C4-1/8-T0-6812-F
A38R34	0757-0461		RESISTOR 68.1K 1% .125W F TC=0+-100	03298	C4-1/8-T0-6812-F
A38R35	0757-0461		RESISTOR 68.1K 1% .125W F TC=0+-100	03298	C4-1/8-T0-6812-F
A38R36	0757-0461		RESISTOR 68.1K 1% .125W F TC=0+-100	03298	C4-1/8-T0-6812-F
A38R37	0757-0461		RESISTOR 68.1K 1% .125W F TC=0+-100	03298	C4-1/8-T0-6812-F
A38R38	0757-0470		RESISTOR 162K 1% .125W F TC=0+-100	03298	C4-1/8-T0-1623-F
A38R39	0757-0467		RESISTOR 121K 1% .125W F TC=0+-100	03298	C4-1/8-T0-1213-F
A38R40	0698-3458		RESISTOR 348K 1% .125W F TC=0+-100	0160G	CC
A38R41	0698-3458		RESISTOR 348K 1% .125W F TC=0+-100	0160G	CC
A38R42	0698-3458		RESISTOR 348K 1% .125W F TC=0+-100	0160G	CC
A38R43	0698-3458		RESISTOR 348K 1% .125W F TC=0+-100	0160G	CC
A38R44	0698-3458		RESISTOR 348K 1% .125W F TC=0+-100	0160G	CC
A38R45	0698-3458		RESISTOR 348K 1% .125W F TC=0+-100	0160G	CC
A38R46	0698-3458		RESISTOR 348K 1% .125W F TC=0+-100	0160G	CC
A38R47	0698-3451		RESISTOR 133K 1% .125W F TC=0+-100	03298	C4-1/8-T0-1333-F
A38R48	0698-3438		RESISTOR 147 1% .125W F TC=0+-100	03298	C4-1/8-T0-147R-F
A38R49	0757-0461		RESISTOR 68.1K 1% .125W F TC=0+-100	03298	C4-1/8-T0-6812-F
A38R50	0698-3152		RESISTOR 3.48K 1% .125W F TC=0+-100	03298	C4-1/8-T0-3481-F
A38R51	0757-0280		RESISTOR 1K 1% .125W F TC=0+-100	03298	C4-1/8-T0-1001-F
A38R52	0757-0461		RESISTOR 68.1K 1% .125W F TC=0+-100	03298	C4-1/8-T0-6812-F
A38U1	1820-1635	7	IC INV CMOS HEX 1-INP	0203G	MC14502AL
A38U2	1820-1908	2	IC GATE CMOS EXCL-OR QUAD 2-INP	0203G	MC140708CL
A38U3	1820-1592		IC INV CMOS HEX 1-INP	0203G	MC140698CL
A38U4	1810-0208		NETWORK-RES 8-PIN-8IP .1-PIN-8PCG	0248C	750-81-R68K
A38U5	1820-1635		IC INV CMOS HEX 1-INP	0203G	MC14502AL
A38U6	1820-1592		IC INV CMOS HEX 1-INP	0203G	MC140698CL
A38U7	1820-1635		IC INV CMOS HEX 1-INP	0203G	MC14502AL
A38U8	1810-0208		NETWORK-RES 8-PIN-8IP .1-PIN-8PCG	0248C	750-81-R68K
A38U9	1820-1635		IC INV CMOS HEX 1-INP	0203G	MC14502AL
A38U10	1810-0208		NETWORK-RES 8-PIN-8IP .1-PIN-8PCG	0248C	750-81-R68K
A38U11	1820-1907	1	IC GATE CMOS EXCL-NOR QUAD 2-INP	0203G	MC140778CL
A38U12	1810-0208		NETWORK-RES 8-PIN-8IP .1-PIN-8PCG	0248C	750-81-R68K
A38U13	1810-0208		NETWORK-RES 8-PIN-8IP .1-PIN-8PCG	0248C	750-81-R4.7K
A38U14	1820-1909	2	IC GATE CMOS OR TPL 3-INP	0203G	MC140758CL
A38U15	1820-1635		IC INV CMOS HEX 1-INP	0203G	MC14502AL
A38U16	1820-1525	1	IC ADDR CMOS FULL ADDER 4-BIT	0203G	MC14008CL
A38U17	1820-1550		IC GATE CMOS OR QUAD 2-INP	0203G	MC140718CL
A38U18	1820-1908		IC GATE CMOS EXCL-OR QUAD 2-INP	0203G	MC140708CL
A38U19	1820-1635		IC INV CMOS HEX 1-INP	0203G	MC14502AL
A38U20	1810-0208		NETWORK-RES 8-PIN-8IP .1-PIN-8PCG	0248C	750-81-R68K
A38U21	1820-1635		IC INV CMOS HEX 1-INP	0203G	MC14502AL
A38U22	1820-1910	1	IC GATE CMOS AND TPL 3-INP	0203G	MC140738CL
A38U23	1820-1909		IC GATE CMOS OR TPL 3-INP	0203G	MC140758CL
A38VR1	1902-3036		DIODE-ZNR 3.16V 5% DO-7 PD=.4W TC=-.064%	0203G	BZ 10939-38
A39	08565-60036	1	ASSEMBLY, READOUT DRIVER	28480	08565-60036
A39C1	0180-2208		CAPACITOR-FXD 220UF+-10% 10VDC TA	0420J	150D227X9010B2
A39C2	0160-0155		CAPACITOR-FXD 3300PF +-10% 200VDC POLYE	0420J	292P33292
A39C3	0180-2374	1	CAPACITOR-FXD 100UF+-10% 20VDC TA	0420J	150D107X9020X2
A39C4	0160-0162		CAPACITOR-FXD .022UF +-10% 200VDC POLYE	0420J	292P22392
A39C5	0160-2055		CAPACITOR-FXD .01UF +80-20% 100VDC CER	28480	0160-2055
A39C6	0180-1746		CAPACITOR-FXD 15UF+-10% 20VDC TA	0420J	150D156X9020B2
A39CR1	1901-0050		DIODE-SWITCHING 80V 200MA 2NS DO-7	28480	1901-0050
A39E1	9170-0029		CORE-SHIELDING BEAD	0188G	56-590-65A2/4A
A39J1			NOT ASSIGNED		
A39J2	1200-0507		SOCKET-IC 16-CONT DIP-SLDR	06776	0002811
A39Q1	1854-0477		TRANSISTOR NPN 2N2222A SI TO-18 PD=500MW	0223G	2N2222A
A39Q2	1854-0477		TRANSISTOR NPN 2N2222A SI TO-18 PD=500MW	0223G	2N2222A
A39Q3	1854-0477		TRANSISTOR NPN 2N2222A SI TO-18 PD=500MW	0223G	2N2222A
A39Q4	1854-0477		TRANSISTOR NPN 2N2222A SI TO-18 PD=500MW	0223G	2N2222A
A39Q5	1854-0477		TRANSISTOR NPN 2N2222A SI TO-18 PD=500MW	0223G	2N2222A
A39Q6	1854-0477		TRANSISTOR NPN 2N2222A SI TO-18 PD=500MW	0223G	2N2222A
A39Q7	1854-0477		TRANSISTOR NPN 2N2222A SI TO-18 PD=500MW	0223G	2N2222A
A39Q8	1854-0477		TRANSISTOR NPN 2N2222A SI TO-18 PD=500MW	0223G	2N2222A

See introduction to this section for ordering information

Scans by ARTEK MEDIA =>

Table 6-2. Replaceable Parts

Reference Designation	HP Part Number	Qty	Description	Mfr Code	Mfr Part Number
A39R1	0757-0401		RESISTOR 100 1% .125W F TC=0+-100	03298	C4-1/8-T0-101-F
A39R2	0757-0399		RESISTOR 82.5 1% .125W F TC=0+-100	03298	C4-1/8-T0-82R5-F
A39R3	0757-0399		RESISTOR 82.5 1% .125W F TC=0+-100	03298	C4-1/8-T0-82R5-F
A39R4	0757-0399		RESISTOR 82.5 1% .125W F TC=0+-100	03298	C4-1/8-T0-82R5-F
A39R5	0698-3444		RESISTOR 316 1% .125W F TC=0+-100	03298	C4-1/8-T0-316R-F
A39R6	0698-3445		RESISTOR 348 1% .125W F TC=0+-100	03298	C4-1/8-T0-348R-F
A39R7	0698-3441	5	RESISTOR 215 1% .125W F TC=0+-100	03298	C4-1/8-T0-215R-F
A39R8	0698-3445		RESISTOR 348 1% .125W F TC=0+-100	03298	C4-1/8-T0-348R-F
A39R9	0698-3441		RESISTOR 215 1% .125W F TC=0+-100	03298	C4-1/8-T0-215R-F
A39R10	0698-3445		RESISTOR 348 1% .125W F TC=0+-100	03298	C4-1/8-T0-348R-F
A39R11	0757-0280		RESISTOR 1K 1% .125W F TC=0+-100	03298	C4-1/8-T0-1001-F
A39R12	0757-1094		RESISTOR 1.47K 1% .125W F TC=0+-100	03298	C4-1/8-T0-1471-F
A39R13	0757-0421		RESISTOR 825 1% .125W F TC=0+-100	03298	C4-1/8-T0-825R-F
A39R14	0757-0421		RESISTOR 825 1% .125W F TC=0+-100	03298	C4-1/8-T0-825R-F
A39R15	0698-3441		RESISTOR 215 1% .125W F TC=0+-100	03298	C4-1/8-T0-215R-F
A39R16	0698-3441		RESISTOR 215 1% .125W F TC=0+-100	03298	C4-1/8-T0-215R-F
A39R17	0757-0405		RESISTOR 162 1% .125W F TC=0+-100	03298	C4-1/8-T0-162R-F
A39R18	0698-3441		RESISTOR 215 1% .125W F TC=0+-100	03298	C4-1/8-T0-215R-F
A39R19	0757-0416		RESISTOR 511 1% .125W F TC=0+-100	03298	C4-1/8-T0-511R-F
A39R20	0698-3155		RESISTOR 4.64K 1% .125W F TC=0+-100	03298	C4-1/8-T0-4641-F
A39R21	0698-3155		RESISTOR 4.64K 1% .125W F TC=0+-100	03298	C4-1/8-T0-4641-F
A39R22	0757-0439		RESISTOR 6.81K 1% .125W F TC=0+-100	03298	C4-1/8-T0-6811-F
A39R23	0757-0439		RESISTOR 6.81K 1% .125W F TC=0+-100	03298	C4-1/8-T0-6811-F
A39R24	0757-0439		RESISTOR 6.81K 1% .125W F TC=0+-100	03298	C4-1/8-T0-6811-F
A39R25	0757-0439		RESISTOR 6.81K 1% .125W F TC=0+-100	03298	C4-1/8-T0-6811-F
A39R26	0757-1094		RESISTOR 1.47K 1% .125W F TC=0+-100	03298	C4-1/8-T0-1471-F
A39R27	0757-0401		RESISTOR 100 1% .125W F TC=0+-100	03298	C4-1/8-T0-101-F
A39R28	0757-0401		RESISTOR 100 1% .125W F TC=0+-100	03298	C4-1/8-T0-101-F
A39R29	0757-0401		RESISTOR 100 1% .125W F TC=0+-100	03298	C4-1/8-T0-101-F
A39R30	0757-0401		RESISTOR 100 1% .125W F TC=0+-100	03298	C4-1/8-T0-101-F
A39R31	0757-0401		RESISTOR 100 1% .125W F TC=0+-100	03298	C4-1/8-T0-101-F
A39R32	0757-0401		RESISTOR 100 1% .125W F TC=0+-100	03298	C4-1/8-T0-101-F
A39R33	0757-0401		RESISTOR 100 1% .125W F TC=0+-100	03298	C4-1/8-T0-101-F
A39R34	0757-0401		RESISTOR 100 1% .125W F TC=0+-100	03298	C4-1/8-T0-101-F
A39R35	0698-3155		RESISTOR 4.64K 1% .125W F TC=0+-100	03298	C4-1/8-T0-4641-F
A39R36	0757-0442		RESISTOR 10K 1% .125W F TC=0+-100	03298	C4-1/8-T0-1002-F
A39R37	0757-0439		RESISTOR 6.81K 1% .125W F TC=0+-100	03298	C4-1/8-T0-6811-F
A39R38	0757-0280		RESISTOR 1K 1% .125W F TC=0+-100	03298	C4-1/8-T0-1001-F
A39R39	0757-0280		RESISTOR 1K 1% .125W F TC=0+-100	03298	C4-1/8-T0-1001-F
A39R40	2100-3355		RESISTOR-TRMR 100K 10% C SIDE-ADJ 1-TRN	73138	72-150-0
A39R41	0757-0200		RESISTOR 5.62K 1% .125W F TC=0+-100	03298	C4-1/8-T0-5621-F
A39R42	0757-0419		RESISTOR 681 1% .125W F TC=0+-100	03298	C4-1/8-T0-681R-F
A39R43	0757-0317		RESISTOR 1.33K 1% .125W F TC=0+-100	03298	C4-1/8-T0-1331-F
A39R44	0757-0419		RESISTOR 681 1% .125W F TC=0+-100	03298	C4-1/8-T0-681R-F
A39R45	0757-0280		RESISTOR 1K 1% .125W F TC=0+-100	03298	C4-1/8-T0-1001-F
A39R46	0757-0401		RESISTOR 100 1% .125W F TC=0+-100	03298	C4-1/8-T0-101-F
A39R47	0757-0382	1	RESISTOR 16.2 1% .125W F TC=0+-100	02999	MF4C1/8-T0-16R2-F
A39R48	0698-3155		RESISTOR 4.64K 1% .125W F TC=0+-100	03298	C4-1/8-T0-4641-F
A39R49	0698-3434		RESISTOR 34.8 1% .125W F TC=0+-100	03298	C4-1/8-T0-34R8-F
A39R50	0698-3434		RESISTOR 34.8 1% .125W F TC=0+-100	03298	C4-1/8-T0-34R8-F
A39R51	0698-3434		RESISTOR 34.8 1% .125W F TC=0+-100	03298	C4-1/8-T0-34R8-F
A39R52	0698-3434		RESISTOR 34.8 1% .125W F TC=0+-100	03298	C4-1/8-T0-34R8-F
A39R53	0698-3434		RESISTOR 34.8 1% .125W F TC=0+-100	03298	C4-1/8-T0-34R8-F
A39R54	0698-3434		RESISTOR 34.8 1% .125W F TC=0+-100	03298	C4-1/8-T0-34R8-F
A39R55	0698-3434		RESISTOR 34.8 1% .125W F TC=0+-100	03298	C4-1/8-T0-34R8-F
A39R56	0698-3434		RESISTOR 34.8 1% .125W F TC=0+-100	03298	C4-1/8-T0-34R8-F
A39R57	0757-0280		RESISTOR 1K 1% .125W F TC=0+-100	03298	C4-1/8-T0-1001-F
A39R58	0757-0461		RESISTOR 68.1K 1% .125W F TC=0+-100	03298	C4-1/8-T0-6812-F
A39R59	0757-0280		RESISTOR 1K 1% .125W F TC=0+-100	03298	C4-1/8-T0-1001-F
A39R60	0757-0461		RESISTOR 68.1K 1% .125W F TC=0+-100	03298	C4-1/8-T0-6812-F
A39R61	0698-0084		RESISTOR 2.15K 1% .125W F TC=0+-100	03298	C4-1/8-T0-2151-F
A39U1	1810-0204		NETWORK-RES 8-PIN-SIP .1-PIN-SPCG	02488	750-81-R1K
A39U2	1820-1443		IC CNTR TTL LS BIN ASYNCHRO	01698	SN74LS293N
A39U3	1820-1203	1	IC GATE TTL LS AND TPL 3-INP	02230	9LS11PC
A39U4	1820-1201	1	IC GATE TTL LS AND QUAD 2-INP	01698	SN74LS08N
A39U5	1820-1422	1	IC MV TTL LS MONOSTBL RETRIG	01698	SN74LS122N
A39U6	1818-0321	1		28480	1818-0321
A39U7	1820-1216		IC DCDR TTL LS 3-TO-8-LINE 3-INP	03790	SN74LS138N
A39U8	1820-1216		IC DCDR TTL LS 3-TO-8-LINE 3-INP	03790	SN74LS138N
A39U9	1820-0471		IC INV TTL HEX 1-INP	02230	7406PC
A39U10	1820-1144		IC GATE TTL LS NOR QUAD 2-INP	02230	9LS02PC
A39U11	1820-0471		IC INV TTL HEX 1-INP	02230	7406PC
A39U12	1820-0471		IC INV TTL HEX 1-INP	02230	7406PC
A39U13	1820-1200		IC INV TTL LS HEX 1-INP	01698	SN74LS05N
A39U14	1820-1200		IC INV TTL LS HEX 1-INP	01698	SN74LS05N
A39U15	1810-0205		NETWORK-RES 8-PIN-SIP .1-PIN-SPCG	02488	750-81-R4.7K

See introduction to this section for ordering information

Scans by ARTEK MEDIA =>

Table 6-2. Replaceable Parts

Reference Designation	HP Part Number	Qty	Description	Mfr Code	Mfr Part Number
A39U16	1810-0205		NETWORK-RES 8-PIN-8IP .1-PIN-8PCG	0248C	750-81-R4.7K
A39U17	1810-0204		NETWORK-RES 8-PIN-8IP .1-PIN-8PCG	0248C	750-81-R1K
A39U18	1810-0204		NETWORK-RES 8-PIN-8IP .1-PIN-8PCG	0248C	750-81-R1K
A39U19	1858-0023	1	TRANSISTOR ARRAY	0192A	CA3081
A39U20	1858-0057		TRANSISTOR ARRAY 16-PIN PLSTC DIP	0192A	CA3082F
A39U21	1820-1198		IC GATE TTL LS NAND QUAD 2-INP	0169H	SN74LS03N
A39U22	1858-0057		TRANSISTOR ARRAY 16-PIN PLSTC DIP	0192A	CA3082F
A39U23	1820-1740		IC DRVR MOS* DSPL DRVR	0340F	DS8863N
A39U24	1820-1740		IC DRVR MOS* DSPL DRVR	0340F	DS8863N
A39U25	1820-1740		IC DRVR MOS* DSPL DRVR	0340F	DS8863N
A39U26	1810-0208		NETWORK-RES 8-PIN-8IP .1-PIN-8PCG	0248C	750-81-R68K
A39U27	1810-0208		NETWORK-RES 8-PIN-8IP .1-PIN-8PCG	0248C	750-81-R68K
A39U28	1810-0208		NETWORK-RES 8-PIN-8IP .1-PIN-8PCG	0248C	750-81-R68K
A39VR1	1902-3024	1	DIODE-ZNR 2.87V 5% DO-7 PD=.4W TC=-.07%	0203G	BZ 10939-26
A40	08565-60048	1	ASSEMBLY, POWER SUPPLY	28480	08565-60048
A40MP1	08565-00025	1	CHASSIS, POWER SUPPLY	28480	08565-00025
A40MP2	08565-00026	1	BRACKET, POWER CAP	28480	08565-00026
A40MP3	2420-0002	1	NUT-HEX-DBL-CHAM 6-32-THD .109-IN-THK	28480	2420-0002
A40MP4	2360-0194	1	SCREW-MACH 6-32 .312-IN-LG 100 DEG	28480	2360-0194
A40MP5	0360-0269	1	TERMINAL-SLDR LUG LK-MTG FOR-#8-SCR	78189	2103-08-00
A40A1	08565-60030	1	ASSEMBLY, RECTIFIER	28480	08565-60030
A40A1C1	0160-4256	7	CAPACITOR-FXD .047UF +-20% 200VDC CER	0456C	8131-200-X7R-473M
A40A1C2	0160-4256		CAPACITOR-FXD .047UF +-20% 200VDC CER	0456C	8131-200-X7R-473M
A40A1C3	0160-4256		CAPACITOR-FXD .047UF +-20% 200VDC CER	0456C	8131-200-X7R-473M
A40A1C4	0160-4256		CAPACITOR-FXD .047UF +-20% 200VDC CER	0456C	8131-200-X7R-473M
A40A1C5	0160-4256		CAPACITOR-FXD .047UF +-20% 200VDC CER	0456C	8131-200-X7R-473M
A40A1C6	0160-2055		CAPACITOR-FXD .01UF +80-20% 100VDC CER	28480	0160-2055
A40A1C7	0180-2736	1	CAPACITOR-FXD .015F+75-10% 15VDC AL	28480	0180-2736
A40A1C8	0160-2055		CAPACITOR-FXD .01UF +80-20% 100VDC CER	28480	0160-2055
A40A1C9	0180-2738	3	CAPACITOR-FXD 5800UF+75-10% 40VDC AL	28480	0180-2738
A40A1C10	0160-2055		CAPACITOR-FXD .01UF +80-20% 100VDC CER	28480	0160-2055
A40A1C11	0180-2738		CAPACITOR-FXD 5800UF+75-10% 40VDC AL	28480	0180-2738
A40A1C12	0160-2055		CAPACITOR-FXD .01UF +80-20% 100VDC CER	28480	0160-2055
A40A1C13	0180-2738		CAPACITOR-FXD 5800UF+75-10% 40VDC AL	28480	0180-2738
A40A1C14	0160-2055		CAPACITOR-FXD .01UF +80-20% 100VDC CER	28480	0160-2055
A40A1C15	0180-2737	1	CAPACITOR-FXD 2800UF+75-10% 75VDC AL	28480	0180-2737
A40A1C16	0180-0197		CAPACITOR-FXD 2.2UF+-10% 20VDC TA	0420J	150D225X9020A2
A40A1C17	0160-4256		CAPACITOR-FXD .047UF +-20% 200VDC CER	0456C	8131-200-X7R-473M
A40A1CR1	1901-0662	18	DIODE-PWR RECT 100V 6A	0203G	MR751
A40A1CR2	1901-0662		DIODE-PWR RECT 100V 6A	0203G	MR751
A40A1CR3	1901-0662		DIODE-PWR RECT 100V 6A	0203G	MR751
A40A1CR4	1901-0662		DIODE-PWR RECT 100V 6A	0203G	MR751
A40A1CR5	1901-0662		DIODE-PWR RECT 100V 6A	0203G	MR751
A40A1CR6	1901-0662		DIODE-PWR RECT 100V 6A	0203G	MR751
A40A1CR7	1901-0662		DIODE-PWR RECT 100V 6A	0203G	MR751
A40A1CR8	1901-0662		DIODE-PWR RECT 100V 6A	0203G	MR751
A40A1CR9	1901-0662		DIODE-PWR RECT 100V 6A	0203G	MR751
A40A1CR10	1901-0662		DIODE-PWR RECT 100V 6A	0203G	MR751
A40A1CR11	1901-0662		DIODE-PWR RECT 100V 6A	0203G	MR751
A40A1CR12	1901-0662		DIODE-PWR RECT 100V 6A	0203G	MR751
A40A1CR13	1901-0662		DIODE-PWR RECT 100V 6A	0203G	MR751
A40A1CR14	1901-0662		DIODE-PWR RECT 100V 6A	0203G	MR751
A40A1CR15	1901-0662		DIODE-PWR RECT 100V 6A	0203G	MR751
A40A1CR16	1901-0662		DIODE-PWR RECT 100V 6A	0203G	MR751
A40A1CR17	1901-0662		DIODE-PWR RECT 100V 6A	0203G	MR751
A40A1CR18	1901-0662		DIODE-PWR RECT 100V 6A	0203G	MR751
A40A1J1	1251-4739	1	CONNECTOR 17-PIN M POST TYPE	27264	22-11-2181
A40A1MP1	0360-0353	4	TERMINAL-SLDR LUG EYLT-MTG FOR-#6-SCR	79963	176
A40A1MP2	0360-0353		TERMINAL-SLDR LUG EYLT-MTG FOR-#6-SCR	79963	176
A40A1MP3	0360-0353		TERMINAL-SLDR LUG EYLT-MTG FOR-#6-SCR	79963	176
A40A1MP4	0360-0353		TERMINAL-SLDR LUG EYLT-MTG FOR-#6-SCR	79963	176
A40A1MP5	0361-0021	4	RIVET:SEMITUBULAR, OVAL HEAD	0000J	OBD
A40A1MP6	0361-0021		RIVET:SEMITUBULAR, OVAL HEAD	0000J	OBD
A40A1MP7	0361-0021		RIVET:SEMITUBULAR, OVAL HEAD	0000J	OBD
A40A1MP8	0361-0021		RIVET:SEMITUBULAR, OVAL HEAD	0000J	OBD
A40A1MP9	2190-0011	10	WASHER-LK INTL T NO. 10 .195-IN-ID	0G791	1022
A40A1MP10	2190-0011		WASHER-LK INTL T NO. 10 .195-IN-ID	0G791	1022
A40A1MP11	2190-0011		WASHER-LK INTL T NO. 10 .195-IN-ID	0G791	1022
A40A1MP12	2190-0011		WASHER-LK INTL T NO. 10 .195-IN-ID	0G791	1022
A40A1MP13	2190-0011		WASHER-LK INTL T NO. 10 .195-IN-ID	0G791	1022
A40A1MP14	2190-0011		WASHER-LK INTL T NO. 10 .195-IN-ID	0G791	1022
A40A1MP15	2190-0011		WASHER-LK INTL T NO. 10 .195-IN-ID	0G791	1022

See introduction to this section for ordering information

Scans by ARTEK MEDIA =>

Table 6-2. Replaceable Parts

Reference Designation	HP Part Number	Qty	Description	Mfr Code	Mfr Part Number
A40A1MP16	2190-0011		WASHER-LK INTL T NO. 10 .195-IN-ID	0G791	1022
A40A1MP17	2190-0011		WASHER-LK INTL T NO. 10 .195-IN-ID	0G791	1022
A40A1MP18	2190-0011		WASHER-LK INTL T NO. 10 .195-IN-ID	0G791	1022
A40A1MP19	2680-0099	10	SCREW-MACH 10-32 .375-IN-LG PAN-HD-POZI	28480	2680-0099
A40A1MP20	2680-0099		SCREW-MACH 10-32 .375-IN-LG PAN-HD-POZI	28480	2680-0099
A40A1MP21	2680-0099		SCREW-MACH 10-32 .375-IN-LG PAN-HD-POZI	28480	2680-0099
A40A1MP22	2680-0099		SCREW-MACH 10-32 .375-IN-LG PAN-HD-POZI	28480	2680-0099
A40A1MP23	2680-0099		SCREW-MACH 10-32 .375-IN-LG PAN-HD-POZI	28480	2680-0099
A40A1MP24	2680-0099		SCREW-MACH 10-32 .375-IN-LG PAN-HD-POZI	28480	2680-0099
A40A1MP25	2680-0099		SCREW-MACH 10-32 .375-IN-LG PAN-HD-POZI	28480	2680-0099
A40A1MP26	2680-0099		SCREW-MACH 10-32 .375-IN-LG PAN-HD-POZI	28480	2680-0099
A40A1MP27	2680-0099		SCREW-MACH 10-32 .375-IN-LG PAN-HD-POZI	28480	2680-0099
A40A1MP28	2680-0099		SCREW-MACH 10-32 .375-IN-LG PAN-HD-POZI	28480	2680-0099
A40A1Q1	1884-0261	9	THYRISTOR-SCR TO-220AB VRRM=100	28480	1884-0261
A40A1R1	0757-0280		RESISTOR 1K 1% .125W F TC=0+-100	03298	C4-1/8-T0-1001-F
A40A1R2	0757-0279		RESISTOR 3.16K 1% .125W F TC=0+-100	03298	C4-1/8-T0-3161-F
A40A1R3	0757-0279		RESISTOR 3.16K 1% .125W F TC=0+-100	03298	C4-1/8-T0-3161-F
A40A1R4	0757-0279		RESISTOR 3.16K 1% .125W F TC=0+-100	03298	C4-1/8-T0-3161-F
A40A1R5	0757-0833	1	RESISTOR 5.11K 1% .5W F TC=0+-100	0299E	MF7C1/2-T0-5111-F
A40A1R6	0757-0401		RESISTOR 100 1% .125W F TC=0+-100	03298	C4-1/8-T0-101-F
A40A1VR1	1902-0197		DIODE-ZNR 82.5V 5% DO-15 PD=1W TC=+.082%	28480	1902-0197
A40A1XA2	1251-2035		CONNECTOR-PC EDGE 15-CONT/ROW 2-ROWS	0450G	252-15-30-300
A40A2	08565-60031	1	ASSEMBLY, REGULATOR	28480	08565-60031
A40A2C1	0180-0116		CAPACITOR-FXD 6.8UF+-10% 35VDC TA	0420J	150D685X9035B2
A40A2C2	0180-1746		CAPACITOR-FXD 15UF+-10% 20VDC TA	0420J	150D156X9020B2
A40A2C3	0180-1746		CAPACITOR-FXD 15UF+-10% 20VDC TA	0420J	150D156X9020B2
A40A2C4	0180-1746		CAPACITOR-FXD 15UF+-10% 20VDC TA	0420J	150D156X9020B2
A40A2C5	0180-2182		CAPACITOR-FXD 18UF+-10% 50VDC TA	0420J	150D186X9050R2
A40A2C6	0160-0168		CAPACITOR-FXD .1UF +-10% 200VDC POLYE	0420J	292P10492
A40A2C7	0180-0291		CAPACITOR-FXD 1UF+-10% 35VDC TA	0420J	150D105X9035A2
A40A2C8	0160-4204	2	CAPACITOR-FXD .033UF +-10% 500VDC CER	0439C	300-500-X7R-333K
A40A2C9	0160-0168		CAPACITOR-FXD .1UF +-10% 200VDC POLYE	0420J	292P10492
A40A2C10	0160-3456		CAPACITOR-FXD 1000PF +-10% 1KVDC CER	28480	0160-3456
A40A2C11	0180-0229		CAPACITOR-FXD 33UF+-10% 10VDC TA	0420J	150D336X9010B2
A40A2C12	0180-1746		CAPACITOR-FXD 15UF+-10% 20VDC TA	0420J	150D156X9020B2
A40A2C13	0180-1746		CAPACITOR-FXD 15UF+-10% 20VDC TA	0420J	150D156X9020B2
A40A2C14	0180-0116		CAPACITOR-FXD 6.8UF+-10% 35VDC TA	0420J	150D685X9035B2
A40A2C15	0180-1866	1	CAPACITOR-FXD 500UF+75-10% 75VDC AL	0420J	39D507G075HL4
A40A2C16	0160-2055		CAPACITOR-FXD .01UF +80-20% 100VDC CER	28480	0160-2055
A40A2C17	0160-4256		CAPACITOR-FXD .047UF +-20% 200VDC CER	0456C	8131-200-X7R-473M
A40A2C18	0180-0197		CAPACITOR-FXD 2.2UF+-10% 20VDC TA	0420J	150D225X9020A2
A40A2C19	0160-2055		CAPACITOR-FXD .01UF +80-20% 100VDC CER	28480	0160-2055
A40A2C20	0160-3456		CAPACITOR-FXD 1000PF +-10% 1KVDC CER	28480	0160-3456
A40A2C21	0160-4204		CAPACITOR-FXD .033UF +-10% 500VDC CER	0439C	300-500-X7R-333K
A40A2C22	0180-1826	1	CAPACITOR-FXD 100UF+50-10% 250VDC AL	0420J	39D107F250HL4
A40A2CR2	1901-0050		DIODE-SWITCHING 80V 200MA 2NS DO-7	28480	1901-0050
A40A2CR4	1901-0159		DIODE-PWR RECT 400V 750MA DO-41	0203G	8R1358-4
A40A2CR6	1901-0050		DIODE-SWITCHING 80V 200MA 2NS DO-7	28480	1901-0050
A40A2CR7	1901-0050		DIODE-SWITCHING 80V 200MA 2NS DO-7	28480	1901-0050
A40A2CR9	1901-0159		DIODE-PWR RECT 400V 750MA DO-41	0203G	8R1358-4
A40A2CR11	1901-0050		DIODE-SWITCHING 80V 200MA 2NS DO-7	28480	1901-0050
A40A2CR12	1901-0050		DIODE-SWITCHING 80V 200MA 2NS DO-7	28480	1901-0050
A40A2CR14	1901-0159		DIODE-PWR RECT 400V 750MA DO-41	0203G	8R1358-4
A40A2CR16	1901-0050		DIODE-SWITCHING 80V 200MA 2NS DO-7	28480	1901-0050
A40A2CR17	1901-0050		DIODE-SWITCHING 80V 200MA 2NS DO-7	28480	1901-0050
A40A2CR19	1901-0159		DIODE-PWR RECT 400V 750MA DO-41	0203G	8R1358-4
A40A2CR21	1901-0050		DIODE-SWITCHING 80V 200MA 2NS DO-7	28480	1901-0050
A40A2CR22	1901-0050		DIODE-SWITCHING 80V 200MA 2NS DO-7	28480	1901-0050
A40A2CR23	1901-0050		DIODE-SWITCHING 80V 200MA 2NS DO-7	28480	1901-0050
A40A2CR24	1901-0159		DIODE-PWR RECT 400V 750MA DO-41	0203G	8R1358-4
A40A2CR26	1906-0094	2	DIODE-FW BRDG 400V 1.5A	0271C	KBP04
A40A2CR27	1901-0050		DIODE-SWITCHING 80V 200MA 2NS DO-7	28480	1901-0050
A40A2CR28	1901-0050		DIODE-SWITCHING 80V 200MA 2NS DO-7	28480	1901-0050
A40A2CR30	1901-0159		DIODE-PWR RECT 400V 750MA DO-41	0203G	8R1358-4
A40A2CR32	1901-0050		DIODE-SWITCHING 80V 200MA 2NS DO-7	28480	1901-0050
A40A2CR34	1901-0159		DIODE-PWR RECT 400V 750MA DO-41	0203G	8R1358-4
A40A2CR36	1901-0050		DIODE-SWITCHING 80V 200MA 2NS DO-7	28480	1901-0050
A40A2CR38	1901-0159		DIODE-PWR RECT 400V 750MA DO-41	0203G	8R1358-4
A40A2CR40	1901-0050		DIODE-SWITCHING 80V 200MA 2NS DO-7	28480	1901-0050
A40A2CR42	1901-0159		DIODE-PWR RECT 400V 750MA DO-41	0203G	8R1358-4
A40A2CR1,3,5,8,10 13,15,18,20,25,29 31,33,35,37,39,41			NOT ASSIGNED		

See introduction to this section for ordering information

Scans by ARTEK MEDIA =>

Table 6-2. Replaceable Parts

Reference Designation	HP Part Number	Qty	Description	Mfr Code	Mfr Part Number
A40A2CR43	1901-0050		DIODE-SWITCHING 80V 200MA 2NS DO-7	28480	1901-0050
A40A2CR44	1906-0094		DIODE-FW BRDG 400V 1.5A	0271C	KBP04
A40A2DS1	1990-0487		LED-VISIBLE LUM-INT=1MCD IF=20MA-MAX	28480	1990-0487
A40A2DS2	1990-0487		LED-VISIBLE LUM-INT=1MCD IF=20MA-MAX	28480	1990-0487
A40A2DS3	1990-0487		LED-VISIBLE LUM-INT=1MCD IF=20MA-MAX	28480	1990-0487
A40A2DS4	1990-0487		LED-VISIBLE LUM-INT=1MCD IF=20MA-MAX	28480	1990-0487
A40A2DS5	1990-0486	1	LED-VISIBLE LUM-INT=1MCD IF=20MA-MAX	28480	1990-0486
A40A2DS6	1990-0487		LED-VISIBLE LUM-INT=1MCD IF=20MA-MAX	28480	1990-0487
A40A2DS7	1990-0487		LED-VISIBLE LUM-INT=1MCD IF=20MA-MAX	28480	1990-0487
A40A2DS8	1990-0487		LED-VISIBLE LUM-INT=1MCD IF=20MA-MAX	28480	1990-0487
A40A2DS9	1990-0487		LED-VISIBLE LUM-INT=1MCD IF=20MA-MAX	28480	1990-0487
A40A2F1	2110-0002	2	FUSE 2A 250V FAST-BLO 1.25X.25 UL IEC	0470C	312002.
A40A2F2	2110-0001		FUSE 1A 250V FAST-BLO 1.25X.25 UL IEC	0470C	312001.
A40A2F3	2110-0043	3	FUSE 1.5A 250V FAST-BLO 1.25X.25 UL IEC	0470C	31201.5
A40A2F4	2110-0043		FUSE 1.5A 250V FAST-BLO 1.25X.25 UL IEC	0470C	31201.5
A40A2F5	2110-0043		FUSE 1.5A 250V FAST-BLO 1.25X.25 UL IEC	0470C	31201.5
A40A2F6	2110-0004	2	FUSE .25A 250V FAST-BLO 1.25X.25 UL IEC	0470C	312.250
A40A2F7	2110-0004		FUSE .25A 250V FAST-BLO 1.25X.25 UL IEC	0470C	312.250
A40A2J1	1251-4187	1	CONNECTOR 9-PIN M POST TYPE	27264	22-11-2101
A40A2J2	1251-4740	1	CONNECTOR 14-PIN M POST TYPE	27264	22-11-2151
A40A2MP1	08565-00030	1	HEAT SINK, TRANSISTOR	28480	08565-00030
	6040-0239		GREASE:SILICONE COMPOUND	99700	120-5GM
A40A2MP2	1400-0493	2	CABLE TIE .062-1.25-DIA .14-WD NYL	59730	TYB-24M-8
A40A2MP3	1400-0493		CABLE TIE .062-1.25-DIA .14-WD NYL	59730	TYB-24M-8
A40A2MP4	1200-0043		INSULATOR-XSTR ALUMINUM (FOR Q15-Q19)	0473G	322047
A40A2MP5	1200-0043		INSULATOR-XSTR ALUMINUM	0473G	322047
A40A2MP6	1200-0043		INSULATOR-XSTR ALUMINUM	0473G	322047
A40A2MP7	1200-0043		INSULATOR-XSTR ALUMINUM	0473G	322047
A40A2MP8	1200-0043		INSULATOR-XSTR ALUMINUM	0473G	322047
A40A2MP9	0340-0162		INSULATOR-XSTR ALUMINUM (FOR Q1-Q4)	28480	0340-0162
A40A2MP10	0340-0162		INSULATOR-XSTR ALUMINUM	28480	0340-0162
A40A2MP11	0340-0162		INSULATOR-XSTR ALUMINUM	28480	0340-0162
A40A2MP12	0340-0162		INSULATOR-XSTR ALUMINUM	28480	0340-0162
A40A2MP13 THRU A40A2MP30	4330-0145	18	INSULATOR-BEAD GLASS	28480	4330-0145
A40A2MP31 THRU A40A2MP49	2200-0145	18	SCREW-MACH 4-40 .438-IN-LG PAN-HD-POZI	28480	2200-0145
A40A2MP50 THRU A40A2MP67	2190-0004	18	WASHER-LK INTL T NO. 6 .115-IN-ID	0G791	418-BC EVERLOCK WASHER
A40A2MP68 THRU A40A2MP85	1200-0081		INSULATOR-SPNR-FLG NYLON	28480	1200-0081
A40A2MP86 THRU A40A2MP99	2110-0269		FUSEHOLDER-CLIP TYPE .250-FUSE	28480	2110-0269
A40A2Q1	1854-0611	3	TRANSISTOR NPN 2N6055 SI DARL TO-3	0203G	2N6055
A40A2Q2	1854-0774	1	TRANSISTOR NPN 2N6056 SI DARL TO-3	0203G	2N6056
A40A2Q3	1854-0611		TRANSISTOR NPN 2N6055 SI DARL TO-3	0203G	2N6055
A40A2Q4	1854-0611		TRANSISTOR NPN 2N6055 SI DARL TO-3	0203G	2N6055
A40A2Q5	1854-0072	2	TRANSISTOR NPN 2N3054 SI TO-66 PD=25W	0192A	2N3054
A40A2Q6	1853-0052	1	TRANSISTOR PNP 2N3740 SI TO-66 PD=25W	0203G	2N3740
A40A2Q7	1854-0072		TRANSISTOR NPN 2N3054 SI TO-66 PD=25W	0192A	2N3054
A40A2Q8	1854-0216	1	TRANSISTOR NPN 2N3441 SI TO-66 PD=25W	0192A	2N3441
A40A2Q9	1854-0324	1	TRANSISTOR NPN 2N3739 SI TO-66 PD=20W	0203G	2N3739
A40A2Q10	1884-0261		THYRISTOR-SCR TO-220AB VRRM=100	28480	1884-0261
A40A2Q11	1854-0404		TRANSISTOR NPN SI TO-18 PD=360MW	28480	1854-0404
A40A2Q12	1855-0081		TRANSISTOR J-FET 2N5245 N-CHAN D-MODE SI	0169H	2N5245
A40A2Q13	1884-0261		THYRISTOR-SCR TO-220AB VRRM=100	28480	1884-0261
A40A2Q14	1854-0404		TRANSISTOR NPN SI TO-18 PD=360MW	28480	1854-0404
A40A2Q15	1884-0261		THYRISTOR-SCR TO-220AB VRRM=100	28480	1884-0261
A40A2Q16	1854-0404		TRANSISTOR NPN SI TO-18 PD=360MW	28480	1854-0404
A40A2Q17	1884-0261		THYRISTOR-SCR TO-220AB VRRM=100	28480	1884-0261
A40A2Q18	1854-0404		TRANSISTOR NPN SI TO-18 PD=360MW	28480	1854-0404
A40A2Q19	1884-0261		THYRISTOR-SCR TO-220AB VRRM=100	28480	1884-0261
A40A2Q20	1854-0404		TRANSISTOR NPN SI TO-18 PD=360MW	28480	1854-0404
A40A2Q21	1884-0261		THYRISTOR-SCR TO-220AB VRRM=100	28480	1884-0261
A40A2Q22	1853-0007		TRANSISTOR PNP 2N3251 SI TO-18 PD=360MW	0203G	2N3251
A40A2Q23	1884-0261		THYRISTOR-SCR TO-220AB VRRM=100	28480	1884-0261
A40A2Q24	1854-0404		TRANSISTOR NPN SI TO-18 PD=360MW	28480	1854-0404
A40A2Q25	1884-0261		THYRISTOR-SCR TO-220AB VRRM=100	28480	1884-0261
A40A2Q26	1854-0404		TRANSISTOR NPN SI TO-18 PD=360MW	28480	1854-0404
A40A2Q27	1855-0081		TRANSISTOR J-FET 2N5245 N-CHAN D-MODE SI	0169H	2N5245
A40A2Q28	1854-0234		TRANSISTOR NPN 2N3440 SI TO-5 PD=1W	0192A	2N3440
A40A2Q29	1854-0234		TRANSISTOR NPN 2N3440 SI TO-5 PD=1W	0192A	2N3440
A40A2Q30	1884-0009	1	THYRISTOR-SCR TO-5 VRRM=200	03508	C68

See introduction to this section for ordering information

Scans by ARTEK MEDIA =>

Table 6-2. Replaceable Parts

Reference Designation	HP Part Number	Qty	Description	Mfr Code	Mfr Part Number
A40A2Q31	1853-0221	1	TRANSISTOR PNP 2N5416 SI TO-5 PD=1W	0192A	2N5416
A40A2R1 THRU					
A40A2R6			NOT ASSIGNED		
A40A2R7	0698-3236	7	RESISTOR 15K .25% .125W F TC=0+-50	03298	NCS5
A40A2R8	0698-3237		RESISTOR 5K .25% .125W F TC=0+-50	03298	NCS5
A40A2R9	0811-1673	1	RESISTOR 3.9 5% 2W PW TC=0+-400	04678	BWH2-3R9-J
A40A2R10	0757-0317		RESISTOR 1.33K 1% .125W F TC=0+-100	03298	C4-1/8-T0-1331-F
A40A2R11	0698-3157		RESISTOR 19.6K 1% .125W F TC=0+-100	03298	C4-1/8-T0-1962-F
A40A2R12	0698-3153		RESISTOR 3.83K 1% .125W F TC=0+-100	03298	C4-1/8-T0-3831-F
A40A2R13	0757-0401		RESISTOR 100 1% .125W F TC=0+-100	03298	C4-1/8-T0-101-F
A40A2R14	0757-0274		RESISTOR 1.21K 1% .125W F TC=0+-100	03298	C4-1/8-T0-1213-F
A40A2R15	0757-0280		RESISTOR 1K 1% .125W F TC=0+-100	03298	C4-1/8-T0-1001-F
A40A2R16	0757-0443		RESISTOR 11K 1% .125W F TC=0+-100	03298	C4-1/8-T0-1102-F
A40A2R17	2100-1774	1	RESISTOR-TRMR 2K 5% WW TOP-ADJ 1-TRN	0374D	3345P-W50-202
A40A2R18	0757-0440		RESISTOR 7.5K 1% .125W F TC=0+-100	03298	C4-1/8-T0-7501-F
A40A2R19	0811-1661	1	RESISTOR .39 5% 2W PW TC=0+-800	04678	BWH2-39/100-J
A40A2R20	0757-0417		RESISTOR 562 1% .125W F TC=0+-100	03298	C4-1/8-T0-562R-F
A40A2R21	0757-0442		RESISTOR 10K 1% .125W F TC=0+-100	03298	C4-1/8-T0-1002-F
A40A2R22	0698-3151		RESISTOR 2.87K 1% .125W F TC=0+-100	03298	C4-1/8-T0-2871-F
A40A2R23	0757-0401		RESISTOR 100 1% .125W F TC=0+-100	03298	C4-1/8-T0-101-F
A40A2R24	0698-3236		RESISTOR 15K .25% .125W F TC=0+-50	03298	NCS5
A40A2R25	0698-3236		RESISTOR 15K .25% .125W F TC=0+-50	03298	NCS5
A40A2R26	0811-1552	1	RESISTOR .56 5% 2W PW TC=0+-800	04678	BWH2-9/16-J
A40A2R27	0757-0416		RESISTOR 511 1% .125W F TC=0+-100	03298	C4-1/8-T0-511R-F
A40A2R28	0757-0442		RESISTOR 10K 1% .125W F TC=0+-100	03298	C4-1/8-T0-1002-F
A40A2R29	0698-3151		RESISTOR 2.87K 1% .125W F TC=0+-100	03298	C4-1/8-T0-2871-F
A40A2R30	0757-0401		RESISTOR 100 1% .125W F TC=0+-100	03298	C4-1/8-T0-101-F
A40A2R31	0698-3236		RESISTOR 15K .25% .125W F TC=0+-50	03298	NCS5
A40A2R32	0698-7421		RESISTOR 40K .25% .125W F TC=0+-100	0299E	MF4C1/8-T0-4002-C
A40A2R33	0757-0438		RESISTOR 5.11K 1% .125W F TC=0+-100	03298	C4-1/8-T0-5111-F
A40A2R34	0757-0458		RESISTOR 51.1K 1% .125W F TC=0+-100	03298	C4-1/8-T0-5112-F
A40A2R35	0811-1666	1	RESISTOR 1 5% 2W PW TC=0+-800	04678	BWH2-1R0-J
A40A2R36	0757-0417		RESISTOR 562 1% .125W F TC=0+-100	03298	C4-1/8-T0-562R-F
A40A2R37	0698-3160		RESISTOR 31.6K 1% .125W F TC=0+-100	03298	C4-1/8-T0-3162-F
A40A2R38	0757-0440		RESISTOR 7.5K 1% .125W F TC=0+-100	03298	C4-1/8-T0-7501-F
A40A2R39	0698-3444		RESISTOR 316 1% .125W F TC=0+-100	03298	C4-1/8-T0-316R-F
A40A2R40	0757-0367	1	RESISTOR 100K 1% .5W F TC=0+-100	0299E	MF7C1/2-T0-1003-F
A40A2R41	0757-0403		RESISTOR 121 1% .125W F TC=0+-100	03298	C4-1/8-T0-121R-F
A40A2R42	0698-3452		RESISTOR 147K 1% .125W F TC=0+-100	03298	C4-1/8-T0-1473-F
A40A2R43	0698-3440		RESISTOR 196 1% .125W F TC=0+-100	03298	C4-1/8-T0-196R-F
A40A2R44	0757-0442		RESISTOR 10K 1% .125W F TC=0+-100	03298	C4-1/8-T0-1002-F
A40A2R45	0757-0317		RESISTOR 1.33K 1% .125W F TC=0+-100	03298	C4-1/8-T0-1331-F
A40A2R46	0698-7796	1	RESISTOR 14.7K .25% .125W F TC=0+-100	0299E	MF4C1/8-T0-1472-C
A40A2R47	0811-2823	2	RESISTOR 7.5 5% .75W PW TC=0+-50	05520	RS1/2-T2-7R5-J
A40A2R48	0757-0274		RESISTOR 1.21K 1% .125W F TC=0+-100	03298	C4-1/8-T0-1213-F
A40A2R49	0698-4519	1	RESISTOR 140K 1% .125W F TC=0+-100	03298	C4-1/8-T0-1403-F
A40A2R50	0757-0465		RESISTOR 100K 1% .125W F TC=0+-100	03298	C4-1/8-T0-1003-F
A40A2R51	0757-0853	1	RESISTOR 51.1K 1% .5W F TC=0+-100	0299E	MF7C1/2-T0-5112-F
A40A2R52	0757-0401		RESISTOR 100 1% .125W F TC=0+-100	03298	C4-1/8-T0-101-F
A40A2R53, A40A2R54	0698-7794		NOT ASSIGNED RESISTOR 10K .25% .125W F TC=0+-100	0299E	MF4C1/8-T0-1002-C
A40A2R55	0698-8417	1	RESISTOR 5.3K.25% .125W F TC=0+-50	0299E	MF4C1/8-T2-5301-C
A40A2R56	0812-0066	1	RESISTOR .33 5% 2W PW TC=0+-800	04678	BWH2-33/100-J
A40A2R57	0757-0428		RESISTOR 1.62K 1% .125W F TC=0+-100	03298	C4-1/8-T0-1621-F
A40A2R58	0757-0442		RESISTOR 10K 1% .125W F TC=0+-100	03298	C4-1/8-T0-1002-F
A40A2R59	0757-0422		RESISTOR 909 1% .125W F TC=0+-100	03298	C4-1/8-T0-909R-F
A40A2R60	0757-0401		RESISTOR 100 1% .125W F TC=0+-100	03298	C4-1/8-T0-101-F
A40A2R61	0698-3237		RESISTOR 5K .25% .125W F TC=0+-50	03298	NCS5
A40A2R62	0698-7794		RESISTOR 10K .25% .125W F TC=0+-100	0299E	MF4C1/8-T0-1002-C
A40A2R63	0811-2823		RESISTOR 7.5 5% .75W PW TC=0+-50	05520	RS1/2-T2-7R5-J
A40A2R64	0757-0278		RESISTOR 1.78K 1% .125W F TC=0+-100	03298	C4-1/8-T0-1781-F
A40A2R65	0757-0442		RESISTOR 10K 1% .125W F TC=0+-100	03298	C4-1/8-T0-1002-F
A40A2R66	0757-0278		RESISTOR 1.78K 1% .125W F TC=0+-100	03298	C4-1/8-T0-1781-F
A40A2R67	0757-0401		RESISTOR 100 1% .125W F TC=0+-100	03298	C4-1/8-T0-101-F
A40A2R68	0698-3236		RESISTOR 15K .25% .125W F TC=0+-50	03298	NCS5
A40A2R69	0698-7794		RESISTOR 10K .25% .125W F TC=0+-100	0299E	MF4C1/8-T0-1002-C
A40A2R70	0811-1671	1	RESISTOR 2.7 5% 2W PW TC=0+-400	04678	BWH2-2R7-J
A40A2R71	0757-0274		RESISTOR 1.21K 1% .125W F TC=0+-100	03298	C4-1/8-T0-1213-F
A40A2R72	0757-0442		RESISTOR 10K 1% .125W F TC=0+-100	03298	C4-1/8-T0-1002-F
A40A2R73	0757-0278		RESISTOR 1.78K 1% .125W F TC=0+-100	03298	C4-1/8-T0-1781-F
A40A2R74	0757-0401		RESISTOR 100 1% .125W F TC=0+-100	03298	C4-1/8-T0-101-F
A40A2R75	0698-3236		RESISTOR 15K .25% .125W F TC=0+-50	03298	NCS5
A40A2R76	0698-3236		RESISTOR 15K .25% .125W F TC=0+-50	03298	NCS5
A40A2R77	0811-1675	1	RESISTOR 5.6 5% 2W PW TC=0+-400	04678	BWH2-5R6-J
A40A2R78	0757-1094		RESISTOR 1.47K 1% .125W F TC=0+-100	03298	C4-1/8-T0-1471-F
A40A2R79	0698-3160		RESISTOR 31.6K 1% .125W F TC=0+-100	03298	C4-1/8-T0-3162-F
A40A2R80	0698-3156		RESISTOR 14.7K 1% .125W F TC=0+-100	03298	C4-1/8-T0-1472-F

See introduction to this section for ordering information

Scans by ARTEK MEDIA =>

Table 6-2. Replaceable Parts

Reference Designation	HP Part Number	Qty	Description	Mfr Code	Mfr Part Number
A40A2R81	0757-0200		RESISTOR 5.62K 1% .125W F TC=0+-100	0329B	C4-1/8-T0-5621-F
A40A2R82	0698-3444		RESISTOR 316 1% .125W F TC=0+-100	0329B	C4-1/8-T0-316R-F
A40A2R83	0698-3452		RESISTOR 147K 1% .125W F TC=0+-100	0329B	C4-1/8-T0-1473-F
A40A2R84	0757-0442		RESISTOR 10K 1% .125W F TC=0+-100	0329B	C4-1/8-T0-1002-F
A40A2R85	0757-0421		RESISTOR 825 1% .125W F TC=0+-100	0329B	C4-1/8-T0-825R-F
A40A2R86	0757-0346		RESISTOR 10 1% .125W F TC=0+-100	0329B	C4-1/8-T0-10R0-F
A40A2U1	1826-0261		IC 741 OP AMP	28480	1826-0261
A40A2U2	1826-0261		IC 741 OP AMP	28480	1826-0261
A40A2U3	1826-0261		IC 741 OP AMP	28480	1826-0261
A40A2U4	1826-0261		IC 741 OP AMP	28480	1826-0261
A40A2U5	1826-0261		IC 741 OP AMP	28480	1826-0261
A40A2U6	1826-0261		IC 741 OP AMP	28480	1826-0261
A40A2U7	1826-0261		IC 741 OP AMP	28480	1826-0261
A40A2U8	1826-0261		IC 741 OP AMP	28480	1826-0261
A40A2U9	1826-0261		IC 741 OP AMP	28480	1826-0261
A40A2U10	1826-0261		IC 741 OP AMP	28480	1826-0261
A40A2VR1	1902-3256		DIODE-ZNR 23.7V 5% DO-7 PD=.4W TC=+.076%	0223G	FZ7296
A40A2VR2	1902-3171		DIODE-ZNR 11V 5% DO-7 PD=.4W TC=+.062%	0223G	FZ7264
A40A2VR3	1902-0680		DIODE-ZNR 1N827 6.2V 5% DO-7 PD=.25W	0199A	1N827
A40A2VR4	1902-3224	2	DIODE-ZNR 17.8V 5% DO-7 PD=.4W TC=+.067%	0223G	FZ7284
A40A2VR5	1902-3224		DIODE-ZNR 17.8V 5% DO-7 PD=.4W TC=+.067%	0223G	FZ7284
A40A2VR6	1902-0244	2	DIODE-ZNR 30.1V 5% DO-15 PD=1W TC=+.075%	28480	1902-0244
A40A2VR7	1902-0025		DIODE-ZNR 10V 5% DO-7 PD=.4W TC=+.06%	0223G	FZ7260
A40A2VR8	1902-3333		DIODE-ZNR 46.4V 5% DO-7 PD=.4W TC=+.081%	0203G	BZ 10939-374
A40A2VR9	1902-3382	1	DIODE-ZNR 68.1V 2% DO-7 PD=.4W TC=+.079%	0203G	BZ 10939-423
A40A2VR10	1902-0683	1	DIODE-ZNR 100V 2% DO-15 PD=1W TC=+.083%	28480	1902-0683
A40A2VR11	1902-3104		DIODE-ZNR 5.62V 5% DO-7 PD=.4W TC=+.016%	0203G	BZ 10939-110
A40A2VR12	1902-3182		DIODE-ZNR 12.1V 5% DO-7 PD=.4W TC=+.064%	0223G	FZ7268
A40A2VR13	1902-3182		DIODE-ZNR 12.1V 5% DO-7 PD=.4W TC=+.064%	0223G	FZ7268
A40A2VR14	1902-0244		DIODE-ZNR 30.1V 5% DO-15 PD=1W TC=+.075%	28480	1902-0244
A40A2VR15	1902-0025		DIODE-ZNR 10V 5% DO-7 PD=.4W TC=+.06%	0223G	FZ7260
A40A2VR16	1902-3301	1	DIODE-ZNR 34.8V 5% DO-7 PD=.4W TC=+.078%	0223G	FZ7312
A40A2VR17	1902-3070	1	DIODE-ZNR 4.22V 5% DO-7 PD=.4W TC=-.038%	0203G	BZ 10939-74
A41	08565-60072	1	ASSEMBLY, POWER CABLE	28480	08565-60072
A41C1	0160-2636	2	CAPACITOR-FXD 470PF +-20% 3KVDC CER	28480	0160-2636
A41C2	0160-2636		CAPACITOR-FXD 470PF +-20% 3KVDC CER	28480	0160-2636
A41C3	0160-4065	1	CAPACITOR-FXD .1UF +-20% 250VAC(RMS)	28480	0160-4065
A41E1	0890-0096	1	TUBING-FLEX .04-ID TFE .016-WALL	09795	I-8W
A41E2	0890-0291	1	TUBING-HS .375-D/.187-RCVD .025-WALL	28480	0890-0291
A41E3	0890-0301	1	TUBING-HS .75-D/.375-RCVD .03-WALL POLYO	0214E	RNF-100-3/4-BLK
A41E4	0890-0983	1	TUBING-HS .125-D/.062-RCVD .02-WALL	0214E	RNF-100-1/8-BLK
A41E5	8090-0402	1	SOLDER-HS PVF CLR INSUL .28/.3-ID .75-LG	0214E	C-142-52
A41F1	2110-0083		FUSE 2.5A 250V FAST-BLO 1.25X.25 UL IEC (FOR 115V OPERATION)	0470C	312002.5
A41F1	2110-0094		FUSE 1.25A 250V FAST-BLO 1.25X.25 UL IEC (FOR 230V OPERATION)	0470C	3121.25
A41FL1	0960-0448	1	LINE MODULE FILTER	28480	0960-0448
A41S1	3101-2025	1	SWITCH-RKR SUBMIN DPDT NS 2A 250VAC	28480	3101-2025

See introduction to this section for ordering information

Scans by ARTEK MEDIA =>

Table 6-2. Replaceable Parts

Reference Designation	HP Part Number	Qty	Description	Mfr Code	Mfr Part Number
			CHASSIS MOUNTED PARTS		
AT1	0960-0084	1	ISOLATOR, 2.05-4.1 GHZ	28480	0960-0084
AT2	0960-0472	1	ISOLATOR, 2.00-4.45 GHZ	28480	0960-0472
AT3	08565-60090	1	ATTENUATOR, COAX 3DB	28480	08565-60090
AT4	08565-60085	1	ATTENUATOR, COAX 6DB	28480	08565-60085
AT5	11593A	2	TERMINATION, 50 OHM	28480	11593A
AT6	11593A		TERMINATION, 50 OHM	28480	11593A
B1	3160-0252	1	FAN-TBAX 90-CFM 115V 50/60-HZ 1.5-THK	28480	3160-0252
B1	3160-0087	1	FAN-TBAX 95-CFM 115V 50/60/400-HZ (OPTION 400)	28480	3160-0087
C1	0160-4082	4	CAPACITOR-FDTHRU 1000PF 20% 200V CER	28480	0160-4082
C2	0160-4082		CAPACITOR-FDTHRU 1000PF 20% 200V CER	28480	0160-4082
C3	0160-4082		CAPACITOR-FDTHRU 1000PF 20% 200V CER	28480	0160-4082
C4	0160-4082		CAPACITOR-FDTHRU 1000PF 20% 200V CER	28480	0160-4082
C5	0170-0073	1	CAPACITOR-FXD 1UF +-10% 600VDC POLYE (OPTION 400)	28480	0170-0073
F1			SEE A41F1		
FL1			SEE A41FL1		
FL2	0960-0085	1	FILTER, 2.05 GHZ	28480	0960-0085
FL3	0960-0159	1	FILTER, DC-1800 MHZ	28480	0960-0159
FL4	9135-0048	1	FILTER, LP 4.9 GHZ	28480	9135-0048
J1	1251-2197	1	CONNECTOR 24-PIN F D SERIES (AUX A)	71468	DDM-24W78
J2	1251-1286	1	CONNECTOR 17-PIN F D SERIES (AUX B)	71468	DCM-17W58
J3	1250-0083	5	CONNECTOR-RF BNC FEM SGL-HOLE-FR 50-OHM (INT SWEEP OUTPUT)	0331F	28JR-130-1
J4	1250-0083		CONNECTOR-RF BNC FEM SGL-HOLE-FR 50-OHM (VERTICAL OUTPUT)	0331F	28JR-130-1
J5	1250-0083		CONNECTOR-RF BNC FEM SGL-HOLE-FR 50-OHM (PENLIFT(BLANK) OUT)	0331F	28JR-130-1
J6	1250-0083		CONNECTOR-RF BNC FEM SGL-HOLE-FR 50-OHM (EXT SWEEP INPUT)	0331F	28JR-130-1
J7			P/O W25 (EXT TRIGGER INPUT)		
J8	1250-0083		CONNECTOR-RF BNC FEM SGL-HOLE-FR 50-OHM (BLANKING INPUT)	0331F	28JR-130-1
J9			P/O W20 (1ST LO OUTPUT)		
J10			P/O W24 (21.4 MHZ IF OUTPUT)		
J11			P/O W1 (RF INPUT, SEE FIGURE 6-1)		
J12			P/O W11 (EXT MIXER)		
J13			P/O W23 (CAL OUTPUT)		
K1	3106-0022	2	SWITCH, COAX 22 GHZ 28V	28480	3106-0022
K2	3106-0022		SWITCH, COAX 22 GHZ 28V	28480	3106-0022
K3	3106-0021	3	SWITCH, COAX SPDT 28V	28480	3106-0021
K4	3106-0021		SWITCH, COAX SPDT 28V	28480	3106-0021
K5	3106-0021		SWITCH, COAX SPDT 28V	28480	3106-0021
L1	08565-60093	1	COIL ASSEMBLY, ALIGNMENT	28480	08565-60093
L2	08565-60094	1	COIL ASSEMBLY, ORTHOGONALITY	28480	08565-60094
S1	3100-3403	1	SWITCH-RTRY SP7T-PS .812-CTR-SPCG (VIDEO FILTER)	28480	3100-3403
S2	3101-2108	1	SWITCH-PB SPDT ALTNG 5A 250VAC SIG IDENT)	28480	3101-2108
T1	9100-3967	1	TRANSFORMER, POWER	28480	9100-3967
U1	0960-0470	1	TRIPLER, HV 10KV	28480	0960-0470
V1	5083-4471	1	CRT	28480	5083-4471
W1	08565-20070	1	CABLE ASSEMBLY, INPUT	28480	08565-20070
W2	08565-20071	1	CABLE ASSEMBLY, RF ATTEN	28480	08565-20071
W3	08565-20072	1	CABLE ASSEMBLY, YTF INPUT	28480	08565-20072
W4	08565-20073	1	CABLE ASSEMBLY, YTF OUTPUT	28480	08565-20073
W5	08565-20074	1	CABLE ASSEMBLY, MIXER	28480	08565-20074
W6	08565-20075	1	CABLE ASSEMBLY, 1.8 LPF INPUT	28480	08565-20075
W7	08565-20076	1	CABLE ASSEMBLY, 1.8 LPF OUTPUT	28480	08565-20076
W8	08565-20077	1	CABLE ASSEMBLY, YTO	28480	08565-20077
W9	08565-20078	1	CABLE ASSEMBLY, 1ST LO OUTPUT	28480	08565-20078
W10	08565-20079	1	CABLE ASSEMBLY, TUNING STABILIZER	28480	08565-20079
W11	08565-20090	1	CABLE ASSEMBLY, EXT MIXER	28480	08565-20090
W12	08565-20080	1	CABLE ASSEMBLY, EXT IF	28480	08565-20080
W13	08565-20081	1	CABLE ASSEMBLY, EXT IF IB	28480	08565-20081
W14	08565-20082	1	CABLE ASSEMBLY, 1ST IF OUTPUT	28480	08565-20082
W15	08565-20083	1	CABLE ASSEMBLY, 2.0 LPF INPUT	28480	08565-20083

See introduction to this section for ordering information

Scans by ARTEK MEDIA =>

Table 6-2. Replaceable Parts

Reference Designation	HP Part Number	Qty	Description	Mfr Code	Mfr Part Number
W16	08565-20084	1	CABLE ASSEMBLY, 2.0 LPF OUTPUT	28480	08565-20084
W17	08565-20087	1	CABLE ASSEMBLY, 2ND CONVERTER INPUT	28480	08565-20087
W18	08565-20088	1	CABLE ASSEMBLY, 2ND CONVERTER OUTPUT	28480	08565-20088
W19	08565-20085	1	CABLE ASSEMBLY, 2ND CONVERTER BYPASS	28480	08565-20085
W20	08565-20089	1	CABLE ASSEMBLY, 1ST LO OUTPUT	28480	08565-20089
W21	08565-60059	1	CABLE ASSEMBLY, 321.4 IF(YELLOW)	28480	08565-60059
W22	08565-60060	1	CABLE ASSEMBLY, 21.4 IF (GREEN)	28480	08565-60060
W23	08565-60061	1	CABLE ASSEMBLY, 100 MHZ CAL OUTPUT(BLUE)	28480	08565-60061
W24	08565-60062	1	CABLE ASSEMBLY,21.4MHZ IF OUTPUT(VIOLET)	28480	08565-60062
W25	08565-60070	1	CABLE ASSEMBLY,EXT TRIGGER INPT(BROWN)	28480	08565-60070
W26	08565-60080	1	CABLE ASSEMBLY,YTO TO AUX B (RED)	28480	08565-60080
W27	08565-60081	1	CABLE ASSEMBLY,YTF TO AUX B (ORANGE)	28480	08565-60081
W28	08565-60058	1	CABLE ASSEMBLY, RIBBON,FREQ CONTROL	28480	08565-60058
W29	08565-60063	1	CABLE ASSEMBLY,RIBBON FRONT SWITCH BD.	28480	08565-60063
W30	08565-60064	1	CABLE ASSEMBLY,RIBBON FRONT SWITCH BD.	28480	08565-60064
W31	08565-60065	1	CABLE ASSEMBLY,RIBBON REAR SWITCH BD.	28480	08565-60065
W32	08565-60066	1	CABLE ASSEMBLY, RIBBON, FREQ DISPLAY	28480	08565-60066
W33	08565-60071	1	CABLE ASSEMBLY, RIBBON,DISPLAY SWITCH BD	28480	08565-60071
W34	08565-60092	1	CABLE ASSEMBLY, CRT	28480	08565-60092
W35	08565-60091	2	CABLE ASSEMBLY, X-DEFLECTION	28480	08565-60091
W36	08565-60091		CABLE ASSEMBLY, Y-DEFLECTION	28480	08565-60091
W37	08565-60067	1	CABLE ASSEMBLY, BEZEL DISPLAY	28480	08565-60067
W38	08565-60068	1	CABLE ASSEMBLY, BEZEL DISPLAY	28480	08565-60068
W39	08565-60069	1	CABLE ASSEMBLY, DISPLAY CONTROL	28480	08565-60069
			MISCELLANEOUS PARTS		
	9320-3714	1	8565A INSTRUMENT CARD	28480	9320-3714
	5020-8863	2	RACK MOUNTING,FLNG,W/O HANDLE (OPT 908)	28480	5020-8863
	5020-8875	2	RACK MOUNTING FLNG, W/HANDLE (OPT 909)	28480	5020-8875
	5061-0090	1	KIT, FRONT HANDLE (OPT 907)	28480	5061-0090
	08565-90001	1	MANUAL, O/S (OPT 910)	28480	08565-90001
	5061-2033	1	KIT, INFO TRAY ASSEMBLY	28480	5061-2033

See introduction to this section for ordering information

Scans by ARTEK MEDIA =>

Table 6-2. Replaceable Parts

Reference Designation	HP Part Number	Qty	Description	Mfr Code	Mfr Part Number
			CABINET PARTS		
	5020-8897	1	TRIM,FRONT HANDLE (OPT 909)	28480	5020-8897
	5001-0440	2	TRIM, SIDE	28480	5001-0440
	5020-8805	1	FRAME, FRONT	28480	5020-8805
	5020-8806	1	FRAME, REAR	28480	5020-8806
	5020-8837	3	STRUT, CORNER, 18"	28480	5020-8837
	5040-7201	4	FOOT, BOTTOM	28480	5040-7201
	5040-7202	1	STRIP, TRIM,TOP	28480	5040-7202
	5040-7219	2	COVER STRIP, FRONT HANDLE	28480	5040-7219
	5040-7220	2	COVER STRIP, REAR HANDLE	28480	5040-7220
	5040-7221	4	FOOT, REAR	28480	5040-7221
	5060-0428	1	FILTER, AIR	28480	5060-0428
	5060-9804	2	STRIP, HANDLE,18"	28480	5060-9804
	5060-9835	1	COVER, TOP 18"	28480	5060-9835
	5060-9847	1	COVER, BOTTOM, 18"	28480	5060-9847
	5060-9884	1	COVER, SIDE, STD.	28480	5060-9884
	5060-9942	1	COVER, SIDE, PERFORATED	28480	5060-9942
	08565-00068	1	SHIELD, TUBE, CRT	28480	08565-00068
	08558-20036	1	CCT, ENCL, TAPPED	28480	08558-20036
	08558-20037	1	END PLATE, ENCL.	28480	08558-20037
	08558-20087	2	CCT ENCL, PLAIN	28480	08558-20087
	08565-00002	1	PANEL, CONN, SUB	28480	08565-00002
	08565-00004	1	DIVIDER, CNTR, MAIN	28480	08565-00004
	08565-00007	1	BRACKET, YTF	28480	08565-00007
	08565-00008	1	BRACKET, RF BOTTOM	28480	08565-00008
	08565-00009	1	BRACKET, YTO SUPPORT	28480	08565-00009
	08565-00011	1	PLATE, SIDE	28480	08565-00011
	08565-00012	1	BRACKET, ATTENUATOR	28480	08565-00012
	08565-00013	1	BRACKET, VIDEO BD, FRONT	28480	08565-00013
	08565-00015	1	BRACKET, MIXER	28480	08565-00015
	08565-00016	1	CENTER DIVIDER	28480	08565-00016
	08565-00017	1	BRACKET, TUNE STABILIZER, FRONT	28480	08565-00017
	08565-00018	1	BRACKET, THIRD CONVERTER, REAR	28480	08565-00018
	08565-00020	1	SHIELD, IF/RF	28480	08565-00020
	08565-00023	1	BRACKET, VIDEO BD., REAR	28480	08565-00023
	08565-00027	1	BRACKET, TRANSFORMER, MAIN	28480	08565-00027
	08565-00028	2	BRACKET, TRANSFORMER, REAR	28480	08565-00028
	08565-00029	2	BRACKET, TRANSFORMER, FRONT	28480	08565-00029
	08565-00031	1	PANEL, REAR	28480	08565-00031
	08565-00032	1	BRACKET, MOTHERBOARD	28480	08565-00032
	08565-00036	1	SHIELD, HIGH VOLTAGE	28480	08565-00036
	08565-00037	1	COVER, HIGH VOLTAGE	28480	08565-00037
	08565-00041	2	PANEL, FRONT LOWER LEFT	28480	08565-00041
	08565-00067	2	PANEL, FRONT LOWER LEFT(OPT 200)	28480	08565-00067
	08565-00042	2	BRACKET, FAN	28480	08565-00042
	08565-00044	1	COVER, LOG AMPLIFIER	28480	08565-00044
	08565-00045	1	COVER, BANDWIDTH FILTER #2	28480	08565-00045
	08565-00046	1	COVER, STEP GAIN	28480	08565-00046
	08565-00049	1	COVER, BANDWIDTH FILTER #1	28480	08565-00049
	08565-00050	1	COVER, VARIABLE GAIN	28480	08565-00050
	08565-00056	1	COVER, FAN	28480	08565-00056
	08565-00059	2	SHIELD	28480	08565-00059
	08565-00061	1	SHIELD, X-Y-Z ASSEMBLY	28480	08565-00061
	08565-00064	1	RESISTOR, BANDWIDTH KNOB SK OP	28480	08565-00064
	08565-00065	2	IF COVER, BLANK	28480	08565-00065
	08565-20006	1	SHIELD, CRT SUPPORT	28480	08565-20006
	08565-20051	2	CIRCUIT ENCLOSURE	28480	08565-20051
	08565-20060	4	STUD, SHOCK MOUNT	28480	08565-20060
	08565-20064	4	DISPLAY SHAFT	28480	08565-20064
	08565-20065	1	DIVIDER, FRONT FRAME	28480	08565-20065
	08565-20093	1	CRT ANCLOSURE, 4-TAP	28480	08565-20093
	08565-20096	1	CRT ANCLOSURE, 8-TAP	28480	08565-20096
	08565-20100	1	STRUT, MODIFIED	28480	08565-20100
	08565-40002	1	BEZEL, CRT	28480	08565-40002
	08565-40003	1	WINDOW, LOWER CRT	28480	08565-40003
	08565-40004	1	WINDOW, UPPER CRT	28480	08565-40004
	86701-00017	1	DISK, FAN SHIELD (OPT 400)	28480	86701-00017
	1490-0841	4	COUPLER, SHAFT	28480	1490-0841
	1520-0094	4	ISOLATOR MOUNT	76005	J-2924-2-1
	6960-0006	1	HOLE PLUG	0421C	0-2587-LC8
	8160-0270	1	SAFETY PLATE, RFI	28480	8160-0270

See introduction to this section for ordering information

Scans by ARTEK MEDIA =>

Table 6-3. Code List of Manufacturers

MFR NO.	MANUFACTURER NAME	ADDRESS		ZIP CODE
00000	U.S.A. COMMON	ANY SUPPLIER OF THE U.S.		
01070	HOLSWORTHY ELECTRONICS LTD	HOLSWORTHY ENGL	ND	
01246	STETTNER-TRUSH INC	CAZENOVIA	NY	
01600	ALLEN-BRADLEY CO	MILWAUKEE	WI	
01696	TEXAS INSTR INC SEMICOND CMPNT DIV	DALLAS	TX	
01850	RCL ELECTRONICS INC	MANCHESTER	NH	
01884	SPRAGUE ELECTRIC DEARBORN ELEK DIV	LONGWOOD FL		32750
01888	SPECTROL ELECTRONICS CORP	CITY OF IND	CA	
01886	FERROXCUBE CORP	SAUGERTIES	NY	
01928	RCA CORP SOLID STATE DIV	SOMERVILLE	NJ	
02768	ILLINOIS TOOL WORKS INC FASTEX DIV	DES PLAINES IL		60016
03508	GE CO SEMICONDUCTOR PROD DEPT	SYRACUSE NY		13201
01994	TRANSITRON ELECTRONIC CORP	WAKEFIELD	MA	
03888	KDI PYROFILM CORP	WHIPPANY NJ		07981
02203	MOTOROLA SEMICONDUCTOR PRODUCTS	PHOENIX	AZ	
28480	HP DIV 05 MICROWAVE SEMICONDUCTOR	PALO ALTO	CA	
02140	RAYCHEM CORP	MENLO PARK	CA	
02170	AMATOM ELEK HARDWARE DIV OF MITE	NEW ROCHELLE	NY	
02178	AIRCO SPEER ELEK DIV AIR RDCN CO	NOGALES	AZ	
06776	ROBINSON NUGENT INC	NEW ALBANY IN		47150
02230	FAIRCHILD SEMICONDUCTOR DIV	MOUNTAIN VIEW	CA	
02270	TRW INC BURLINGTON DIV	BURLINGTON	IA	
09795	PENNTUBE PLASTICS CO DIV DIXON IND	CLIFTON HEIGHTS	PA	19018
06791	THOMPSON BREMER DIV VARE	CHICAGO IL		60622
10389	CHICAGO SWITCH INC	CHICAGO	IL	60647
02480	CTS OF BERNE INC	BERNE	IN	
02588	CLARDSTAT MFG CO INC	DOVER	NH	
02600	THERMALLOY CO	DALLAS	TX	
02710	GENERAL INSTR CORP SEMIDON PROD GP	HICKSVILLE	NY	
15454	RODAN INDUSTRIES INC	ANAHEIM CA		92806
02740	ELEC-TROL INC	SAUGUS	CA	
02780	OMNI SPECTRA INC	FARMINGTON	MI	
02880	SILICONIX INC	SANTA CLARA	CA	
02910	SIGNETICS CORP	SUNNYVALE	CA	
02990	MEPCO/ELECTRA CORP	MINERAL WELLS	TX	
03270	GOWANDA ELECTRONICS CORP	GOWANDA	NY	
03298	CORNING GLASS WORKS (BRADFORD)	BRADFORD	PA	
03310	SPECIALTY CONNECTOR CO INC	INDIANAPOLIS	IN	
03400	NATIONAL SEMICONDUCTOR CORP	SANTA CLARA	CA	
03418	CORNING GLASS WORKS (WILMINGTON)	WILMINGTON	NC	
27264	MOLEX PRODUCTS CO	DOWNERS GROVE I		60515
28480	HP DIV 00 CORPORATE	PALO ALTO	CA	
03740	BOURNS INC TRIMPOT PROD DIV	RIVERSIDE	CA	
03790	ADVANCED MICRO DEVICES INC	SUNNYVALE	CA	
04200	SPRAGUE ELECTRIC CO	NORTH ADAMS	MA	
04210	STIMPSON EDWIN B CO INC	BROOKLYN	NY	
59730	THOMAS & BETTS CO THE	ELIZABETH NJ		07207
04390	CENTRE ENGINEERING INC	STATE COLLEGE	PA	
04420	ASSOCIATED SPRING CORP	BRISTOL	CT	
04470	CAMBRIDGE THERMIONIC CORP	CAMBRIDGE	MA	
71468	ITT CANNON ELECTRIC CO	SANTA ANA CA		92702
04560	TRW ELEK COMPONENTS CINCH DIV	ELK GROVE VLGE	IL	
72136	ELECTRO MOTIVE CORP SUB IEC	WILLIMANTIC CT		06226
04560	ERIE TECHNOLOGICAL PRODUCTS INC	ERIE	PA	
73138	BECKMAN INSTRUMENTS INC HELIPOT DIV	FULLERTON	CA	92634
04600	FEDERAL SCREW PRODUCTS CO	CHICAGO	IL	
73899	J F D ELECTRONICS CORP	BROOKLYN NY		11219
74276	SIGNALITE DIV GENERAL INST CORP	NEPTUNE NJ		07753
74970	JOHNSON E F CO	WASECA MN		56093
04678	TRW INC PHILADELPHIA DIV	PHILADELPHIA	PA	
04700	LITTELFUSE INC	DES PLAINES	IL	
76005	LORD MFG CO DIV OF LORD CORP	ERIE PA		16512
76381	3M COMPANY	ST PAUL	MN	55101
04730	TRW ELEK CMPNT CINCH-MONADNOCK DIV	CITY OF IND	CA	
76854	OAK IND INC SW DIV	CRYSTAL LAKE IL		60014
77147	PATTON-MACGUYER CO DIV OF AVID CORP	PROVIDENCE RI		02905
78189	ILLINOIS TOOL WORKS INC SHAKEPROOF	ELGIN IL		60126
04878	C-W INDUSTRIES	WARMINSTER	PA	
79963	ZIERICK MFG CO	MT KISCO NY		10549
05520	DALE ELECTRONICS INC	COLUMBUS	NE	
05738	INDUSTRIAL RETAINING RING CO	IRVINGTON	NJ	
05761	SEALECTRO CORP	MAMARONECK	NY	
99700	GRAPHIC CALCULATOR CO INC	BARRINGTON IL		60010
9A469	DURANT MFG CO	NEW ROCHELLE NY		10801
K3105	CAMBION ELECTRONIC PRODUCTS LTD	CASTLETON	EG	

Scans by ARTEK MEDIA =>

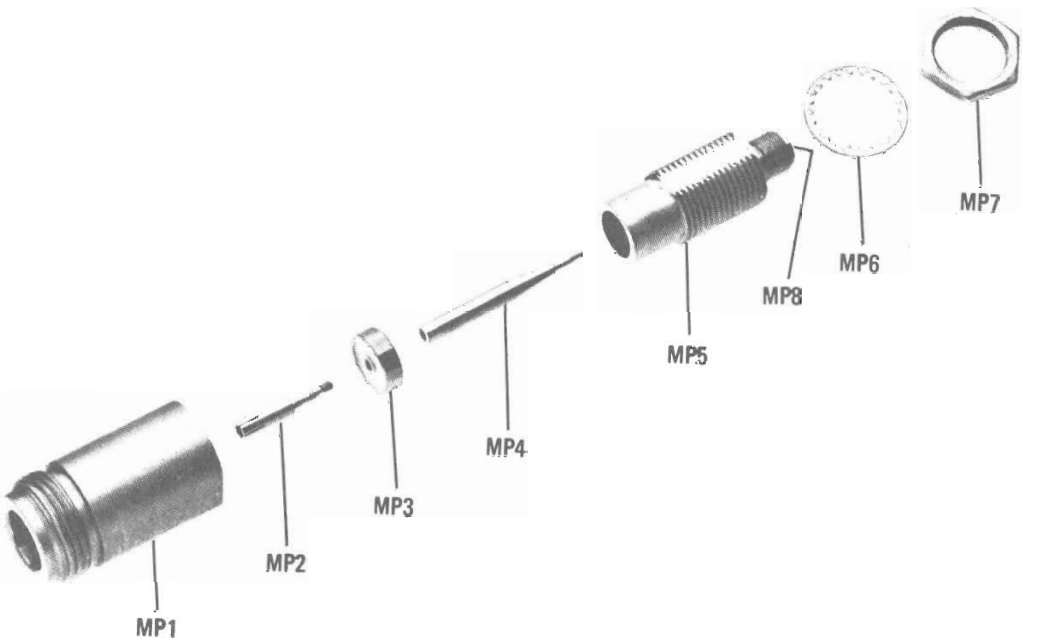

Reference Designation	HP Part Number	Qty	Description	Mfr. Code	Mfr. Part Number
J11	86290-60005	1	Connector Assy (Type N)	28480	86290-60005
J11MP1	1250-0914	1	Body: RF Connector (Type N)	02660	131-150
J11MP2	1250-0915	1	Contact: RF Connector (Type N)	02660	131-149
J11MP3	5040-0306	1	Insulator	28480	5040-0306
J11MP4	08555-20093	1	Center Conductor	28480	08555-20093
J11MP5	08555-20094	1	Body: Bulkhead	28480	08555-20094
J11MP6	2190-0104	1	Washer: Lock 0.439" ID	0000J	OBD
J11MP7	2950-0132	1	Nut: Hex 7/16 – 28	0000J	OBD
J11MP8	08761-2027	1	Insulator	28480	08761-2027

Figure 6-1. INPUT 50Ω Connector J11, Exploded View

Scans by ARTEK MEDIA =>

SECTION VII
MANUAL BACKDATING CHANGES

7-1. INTRODUCTION

7-2. This section normally contains information for adapting this manual to instruments for which the content does not apply directly. Since this manual does apply directly to instruments having serial numbers listed on the title page, no backdating information is given here. Refer to INSTRUMENTS COVERED BY MANUAL in Section I for additional important information about serial number coverage.

Scans by ARTEK MEDIA =>

SECTION VIII
SERVICE

8-1. INTRODUCTION

8-2. This section provides instructions for troubleshooting and repairing the Model 8565A Spectrum Analyzer. Circuit descriptions and simplified block diagrams are included with the schematic diagrams of the assemblies. Component location illustrations are also contained in this section. Schematic presentations in this manual show electrical circuit operation and are not intended to serve as wiring diagrams.

8-3. ASSEMBLY SERVICE SHEETS

8-4. The schematics are arranged by service sheets. The service sheet numbers appear in the lower right-hand corner of the schematics (large number above assembly number). Included in the service sheet is the schematic as well as the accompanying circuit theory, component-parts location diagram, simplified block diagrams, and schematic-level troubleshooting.

8-5. CIRCUIT DESCRIPTIONS

8-6. A detailed circuit description for each individual schematic diagram is placed on the facing left-hand foldout page. This places material needed for component-level diagnosis in one location and allows easy correlation between function and specific circuitry.

8-7. TROUBLESHOOTING

WARNING

With the ac power cable connected, the ac line voltage is present at the terminals of power line assembly A41FL1 (mounted on rear panel) and at the LINE switch, whether the LINE switch is on or off. With the covers removed, these terminals are exposed. Care must be taken to avoid contact with these terminals.

With the covers removed, terminals are exposed that have voltages capable of causing death. Any maintenance or repair of the opened instrument under voltage should be carried out only by a skilled person who is aware of the hazard involved.

After disconnecting ac line power cord, allow a minimum of 30 seconds for High Voltage Power Supply to discharge before removing High Voltage Power Supply protective cover.

8-8. Troubleshooting is generally divided into two maintenance levels in this manual. The first level isolates a trouble to a circuit or assembly. This is done by using troubleshooting block diagrams that provide signal levels and techniques to isolate the cause of a malfunction and identify the defective assembly.

8-9. The second maintenance level isolates the trouble to the component. Schematic diagrams and circuit descriptions for each assembly aid in troubleshooting to the component level.

8-10. When troubleshooting a transistor stage, check for a forward bias condition of the base-emitter junction. If this condition exists, the next step is to remove this forward bias by shorting the base to the emitter and checking to see if the collector voltage rises to the approximate level of the supply. The next check that can be made, if it is known that the transistor is not operating in a saturated condition, is to check for a voltage drop between emitter and collector. These serve only as quick checks and will help in getting started with the problem.

8-11. RECOMMENDED TEST EQUIPMENT

8-12. Test equipment required to maintain the Model 8565A is listed in Table 1-3. If the equipment listed is not available, equipment that meets the minimum specifications shown may be substituted.

Scans by ARTEK MEDIA =>

8-13. REPAIR

8-14. After-Service Product Safety Checks. Visually inspect interior of instrument for any signs of abnormal internally generated heat, such as discolored printed circuit boards or components, damaged insulation, or evidence of arcing. Determine and remedy cause of any such condition.

8-15. Using a suitable ohmmeter, check resistance from instrument enclosure to ground pin on power cord plug. The reading must be less than one ohm. Flex the power cord while making this measurement to determine whether intermittent discontinuities exist.

8-16. Check resistance from instrument enclosure to line and neutral (tied together) with the line switch ON and the power source disconnected. The minimum acceptable resistance is two megohms. Replace any component which results in failure to meet this minimum.

8-17. Check line fuse to verify that a correctly rated fuse is installed.

Table 8-1. Schematic Diagram Notes (1 of 3)

SCHEMATIC DIAGRAM NOTES

R, L, C	Resistance is in ohms, inductance is in microhenries, capacitance is in microfarads, unless otherwise noted.
P/O	Part of.
*	Asterisk denotes a factory-selected value. Value shown is typical.
○	Panel control.
⊘	Screwdriver adjustment.
▭	Encloses front panel designation.
⸢- - -⸣	Encloses rear panel designation.
—— - - ——	Circuit assembly borderline.
- — — — — -	Other assembly borderline.
——▶——	Heavy line with arrows indicates path and direction of main signal.
—▶—	Heavy dashed line with arrows indicates path and direction of main feedback.
CW	Wiper moves toward CW with clockwise rotation of control as viewed from shaft or knob.
⬭	Encloses wire color code. Code used (MIL-STD-681) is the same as the resistor color code. First number identifies the base color, second number the wider stripe, and the third number identifies the narrower stripe; e.g. (947) denotes white base, yellow wide stripe, violet narrow stripe.

Scans by ARTEK MEDIA =>

Table 8-1. Schematic Diagram Notes (2 of 3)

SCHEMATIC DIAGRAM NOTES

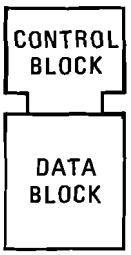

Logic device symbol.

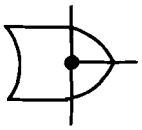

Wired OR.

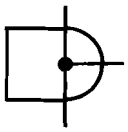

Wired AND.

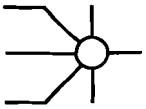

Isolated common connection.

Ferrite bead (prevents high frequency parasitic oscillations).

Tuned cavity.

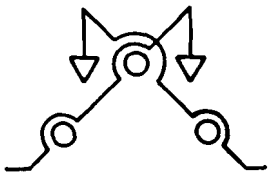

Three-pole YIG-tuned filter.

Isolator (circulator type).

Scans by ARTEK MEDIA =>

Table 8-1. Schematic Diagram Notes (3 of 3)

SCHEMATIC DIAGRAM NOTES

	Test point location. Number denotes test point number.
	Assembly ground.
	Chassis ground.
	Earth ground.
	Indicates "WARNING: HAZARDOUS VOLTAGE ."
	Schottky diode.
	Light-emitting diode (LED).
	Breakdown diode.
	PIN diode.
	Varactor.

Scans by ARTEK MEDIA =>

SERVICE SHEET 1

MODEL 8565A SPECTRUM ANALYZER, OVERALL CIRCUIT DESCRIPTION

Figure 8-1 shows the overall block diagram of the Model 8565A Spectrum Analyzer. This is a simplified block diagram and is not intended to show every input to, or output from, a particular assembly. Some of the direct lines between assemblies might actually be routed through switches in other assemblies. For example, the SWEEP line is shown as a direct connection betwen A16 Sweep Generator and A6 X Deflection Amplifier, but the actual signal path is through A2 Front Panel Control Assembly and A10 Display Motherboard.

The overall block diagram is divided into three sections: RF, IF, and Display. Signal paths through A29 RF-IF Motherboard and A10 Display Motherboard are not shown.

Brief descriptions of the assemblies are presented in the same order as the related schematics appear in this manual. Refer to the indicated service sheets for complete circuit descriptions.

A2 Front Panel Control Assembly
(Service Sheet 5)

A2 Front Panel Control Assembly includes the following subassemblies: A2A1 Front Switch Assembly, A2A2 Frequency Display Assembly, A2A3 Tuning Assembly, A2A4 Rear Switch Assembly, and A2A5 Reference Level Encoder Assembly.

For operational descriptions of the front-panel controls, see Section III. The functional description of a control, as it affects a specific assembly, is given in the circuit description of that assembly.

A34 RF Attenuator Assembly
(Service Sheet 6)

A34 RF Attenuator Assembly receives a signal from the INPUT 50Ω connector on the front panel. The front-panel INPUT ATTEN control selects the amount of attenuation (0 dB to 70 dB in 10 dB steps) of the input signal.

A33 Limiter
(Service Sheet 6)

When the FREQUENCY BAND GHz switch is set to .01 — 1.8, A33 Limiter and 1.8 GHz Low-Pass Filter FL3 are switched into the signal path by the activation of Coax Switches K2 and K1. The Limiter protects A30 First Mixer Assembly from excessive input power.

A32 YIG-Tuned Filter Assembly
(Service Sheet 6)

The signal path is normally through A32 YIG-Tuned Filter (YTF) Assembly, 3-dB Attenuator AT3, and 6-dB Attenuator AT4 to A30 First Mixer Assembly except when the FREQUENCY BAND GHz setting .01 — 1.8 is selected. The YTF is used as a preselector on the analyzer for the FREQUENCY BAND GHz settings covering 1.7 to 22 GHz. Its purpose is to reduce image, multiple, and spurious responses.

A30 First Mixer Assembly
(Service Sheet 6)

A30 First Mixer Assembly mixes the .01 to 22 GHz input signal with either the fundamental or a harmonic of the 2.0 to 4.46 GHz first LO signal from A31 YIG-Tuned Oscillator Assembly (YTO). The output is 2050 MHz IF for the FREQUENCY BAND GHz setting .01 — 1.8 and 321.4 MHz IF for the other internal mixing bands. The First Mixer is used only to couple the LO into the external mixer line when external mixing is used.

Scans by ARTEK MEDIA =>

A31 YIG-Tuned Oscillator Assembly
(Service Sheet 6)

A31 YIG-Tuned Oscillator Assembly (YTO) is used as the first LO in the analyzer. It is a transistor oscillator with a YIG sphere as the resonator. The YTO is tuned by inputs from A19 YIG Driver Assembly and A14 Tuning Stabilizer Control Assembly. The 2.0 to 4.46 GHz output signal goes to A30 First Mixer Assembly.

A35 Second Converter Assembly
(Service Sheet 7)

A35 Second Converter Assembly includes three subassemblies: A35A1 Second Converter Oscillator Housing Assembly, A35A1A1 Second Converter Oscillator Assembly, and A35A2 Second Converter Voltage Filter Assembly. The Second Converter receives a signal from A30 First Mixer (through the 2050-MHz Low-Pass Filter FL2) or from the External Mixer (through the 2.05 — 4.1 GHz Isolator AT1 and FL2), depending on the position of Coax Switch K3. Its input is 2050 MHz IF, and its output is 21.4 MHz IF. When Coax Switches K5 and K4 are not activated, the Second Converter is bypassed, and a signal from A13 Relay Driver Assembly to A35A2 Voltage Filter Assembly turns off the Second Converter oscillator. The Second Converter is used only for FREQUENCY BAND GHz settings of .01 — 1.8, 14.5 — 26.6, and 22.9 — 40.

A37 Third Converter Assembly
(Service Sheet 8)

A37 Third Converter Assembly amplifies and down-converts to 21.4 MHz the 321.4 MHz signal from Coax Switch K4. It also contains circuitry to provide the CAL OUTPUT signal at the front panel and circuitry for signal identification.

A13 Relay Driver Assembly
(Service Sheet 9)

A13 Relay Driver Assembly receives inputs from the SIG IDENT and FREQUENCY BAND GHz switches on the front panel. A RETRACE BLANK signal from A16 Sweep Generator Assembly is used during the signal identification. The Relay Driver controls Coax Switches K1 through K5 and provides a means to identify a displayed signal (except in FREQUENCY BAND GHz setting .01 — 1.8) by controlling the frequency of the local oscillator in A37 Third Converter Assembly.

A16 Sweep Generator Assembly
(Service Sheet 10)

A16 Sweep Generator Assembly contains circuits which trigger and generate a −5V to +5V linear ramp that horizontally sweeps the CRT display. The sweep voltage is also processed in A15 Sweep Attenuator Assembly to sweep the analyzer frequency.

A15 Sweep Attenuator Assembly
(Service Sheet 11)

A15 Sweep Attenuator Assembly attenuates the sweep ramp from A16 Sweep Generator Assembly to provide the different frequency span widths as selected by the FREQUENCY SPAN/DIV and FREQUENCY SPAN MODE switches, and there is circuitry to control the Auto Sweep Time (AST). The attenuated sweep ramp goes to A17 Frequency Control Assembly for wide frequency spans and to A14 Tuning Stabilizer Control Assembly for narrow frequency spans.

Scans by ARTEK MEDIA =>

A17 Frequency Control Assembly
(Service Sheet 12)

A17 Frequency Control Assembly contains circuits for controlling and displaying the frequency to which the analyzer is tuned. It is controlled by the TUNING, FREQUENCY BAND GHz and FREQUENCY SPAN MODE controls on the front panel. The main input is the attenuated sweep from A15 Sweep Attenuator Assembly. The three main outputs are voltages proportional to YTO frequency, YTF frequency, and center frequency.

A18 Full Multiband Assembly
(Service Sheet 13)

A18 Full Multiband Assembly contains circuits for spectrum analyzer operation in the full band modes of FULL BAND and PER DIV F (FREQUENCY SPAN/DIV in F) and also in the multiband mode 1.7 — 22 GHz SPAN. There is also circuitry to control the Auto Sweep Time (AST) and to generate a marker for the full band and multiband modes, and a circuit for sweep blanking in the PER DIV mode.

A19 YIG Driver Assembly
(Service Sheet 14)

A19 YIG Driver Assembly contains circuits that tune A31 YIG-Tuned Oscillator (YTO) Assembly and A32 YIG-Tuned Filter (YTF) Assembly. It receives voltages proportional to the YTO and YTF frequencies from A17 Frequency Control Assembly. The PRESELECTOR PEAK control varies an offset voltage in the YTF driver to control the tracking of the YTF to the YTO.

A14 Tuning Stabilizer Control Assembly
(Service Sheet 15)

A14 Tuning Stabilizer Control Assembly contains circuits that tune A31 YIG-Tuned Oscillator Assembly. A14 Tuning Stabilizer Control Assembly and A36 Tuning Stabilizer Assembly function together as a Tuning Stabilizer System, which is described on Service Sheet 15.

A36 Tuning Stabilizer Assembly
(Service Sheet 16)

A36 Tuning Stabilizer Assembly is used only in the AUTO STABILIZER mode. This assembly comlrises three subassemblies: A36A1 Discriminator Assembly, A36A2 VCXO Assembly, and A36A3 Sampler Assembly. Additional control circuitry for the tuning stabilizer operation is in A14 Tuning Stabilizer Control Assembly.

A12 DVM Analog Assembly
(Service Sheet 17)

A12 DVM Analog Assembly processes the analog input voltage (center frequency) to provide A11 DVM Digital Assembly with a time interval proportional to the input voltage. It also generates control signals from the analog switches in the assembly.

A11 DVM Digital Assembly
(Service Sheet 18)

A11 DVM Digital Assembly includes most of the circuitry for timing and control of A12 DVM Analog Assembly, and it provides timing and control for the center frequency (FREQUENCY GHz) and bezel displays.

Scans by ARTEK MEDIA =>

A20 Bias Assembly
(Service Sheet 19)

A20 Bias Assembly biases the mixer diode in A30 First Mixer Assembly, and it controls the gain of A28 Variable Gain Assembly to compensate for changes in RF signal loss as a function of frequency.

A28 Variable Gain Assembly
(Service Sheet 20

A28 Variable Gain Assembly has four functions: It amplifies the 21.4 MHz signal from A37 Third Converter Assembly, it varies gain (or attenuation) to compensate for changes in conversion efficiency and RF signal loss as a function of frequency, it provides variable gain for reference level calibration, and it provides attenuation for the signal identification function.

A27 Bandwidth Filter No. 1 Assembly
(Service Sheet 21)

A27 Bandwidth Filter No. 1 Assembly operates at 21.4 MHz and is variable in bandwidth from 3 MHz to 1 kHz. The front-panel RESOLUTION BW switch is used to select one of eight available bandwidth settings. The narrower bandwidths are obtained from four synchronously tuned crystal filters; the four wider bandwidths, from four synchronously tuned LC tank circuits. The four stages of bandwidth filters are on two similar printed-circuit boards, A27 Bandwidth Filter No. 1 Assembly and A23 Bandwidth Filter No. 2 Assembly. (Two LC tank circuits and two crystal filters are on each board.)

A24 Step Gain Amplifier Assembly
(Service Sheet 22)

A24 Step Gain Amplifier amplifies the 21.4 MHz signal from A37 Third Converter Assembly. The amplifier stages are selected by the front-panel REFERENCE LEVEL switch. A24 Step Gain Amplifier Assembly also contains the circuitry for the 0 to 12 dB of attenuation as controlled by the front-panel REFERENCE LEVEL FINE control.

A23 Bandwidth Filter No. 2 Assembly
(Service Sheet 23)

A23 Bandwidth Filter No. 2 Assembly is almost identical to A27 Bandwidth Filter No. 1 Assembly. The differences are described on Service Sheet 23.

A22 Log Amplifier Assembly
(Service Sheet 24)

A22 Log Amplifier Assembly provides the ability to display signals in either a lingar mode or log mode. It also operates with A24 Step Gain Amplifier Assembly to provide the last 40 dB of step gain amplification of the 21.4 MHz IF signal.

A21 Video Assembly
(Service Sheet 25)

A21 Video Assembly filters the detected signal from A22 Log Amplifier Assembly as selected by the VIDEO FILTER and RESOLUTION BW switches. It scales the amplitude according to the AMPLITUDE SCALE selected at the front panel. It also controls A23 and A27 Bandwidth Filter Assemblies to determine selection of RESOLUTION BW, and it varies the Auto Sweep Time according to VIDEO FILTER and RESOLUTION BW settings.

Scans by ARTEK MEDIA =>

A1 Front Panel Display Assembly
(Service Sheet 27)

A1 Front Panel Display Assembly includes A1A1 Bezel Display Assembly and A1A2 Display Switch Assembly. The Bezel Display Assembly provides information, in the form of LED displays above and below the CRT, about the front-panel control settings of the spectrum analyzer. The Display Switch Assembly provides the switches and potentiometers controlling the CRT display.

A3 Display Adjust Assembly
(Service Sheet 27)

A3 Display Adjust Assembly includes the front-panel screwdriver adjustments ASTIG, TRACE ALIGN, HORIZ POSN, and VERT POSN. The ASTIG adjustment is discussed in the circuit description of A8 High Voltage Power Supply Assembly; TRACE ALIGN, A7 Storage Assembly; HORIZ POSN, A6 X Deflection Amplifier Assembly; and VERT POSN, A5 Y Deflection Amplifier Assembly.

A6 X Deflection Amplifier Assembly
(Service Sheet 28)

A6 X Deflection Amplifier Assembly receives inputs from the front-panel HORIZ POSN adjustment and A16 Sweep Generator Assembly to provide a horizontal deflection signal to the CRT.

A5 Y Deflection Amplifier Assembly
(Service Sheet 29)

A5 Y Deflection Amplifier Assembly receives inputs from the front-panel VERT POSN adjustment, A21 Video Assembly, and A7 Storage Assembly to provide a vertical deflection signal to the CRT.

A4 Z Axis Amplifier Assembly
(Service Sheet 30)

A4 Z Axis Amplifier Assembly performs all CRT blanking functions and controls intensity. It receives inputs from the front-panel INTENSITY and BASELINE CLIPPER controls, A21 Video Assembly, A18 Full Multiband Assembly, A16 Sweep Generator Assembly, and A7 Storage Assembly. It provides the gate voltage to A8 High Voltage Power Supply Assembly to control blanking and intensity of the CRT.

A7 Storage Assembly
(Service Sheet 31)

A7 Storage Assembly controls the storage portions of the CRT and in addition controls orthogonality and pattern. It also contains circuitry which controls the interaction between the PERSIST and INTENSITY controls.

A8 High Voltage Power Supply Assembly
(Service Sheet 32)

WARNING

Because of the high voltages found in this assembly, servicing should be accomplished only by qualified personnel.

A8 High Voltage Power Supply Assembly provides operating potentials for the CRT. These include −3000V for the cathode, approximtely −3050V for the intensity grid, +7000V for the post accelerator (by way of High Voltage Multipler U1), −50V for CRT controls, and approximately −2000V for focus.

Scans by ARTEK MEDIA =>

A9 High Voltage Oscillator Assembly
(Service Sheet 32)

WARNING

Because of the high voltages found in this assembly, servicing should be accomplished only by qualified personnel.

A9 High Voltage Oscillator Assembly senses the CRT cathode voltage and maintains the cathode at −3000V in conjunction with A8 High Voltage Power Supply Assembly.

A38 Readout Input Assembly
(Service Sheet 34)

A38 Readout Input Assembly decodes front-panel control positions and time multiplexes them onto a bus. Some logical manipulation is performed to make the control code patterns more useful. As a result, seven groups of inputs derived from front-panel control codes are presented to the multiplex scanner. The seven groups are scanned in a sequence determined by A39 Readout Driver Assembly and are sent to that assembly via the six-line MX bus.

A39 Readout Driver Assembly
(Service Sheet 35)

A39 Readout Driver Assembly provides drive for A1A1 Bezel Display Assembly. There are three distinct groups of drivers on the board. The first accepts information about front-panel control settings and drives the corresponding 16 digits (see A38 Readout Input Assembly). The second accepts information about the center frequency and drives the six center frequency digits. The third provides dc for annunciators.

A40 Power Supply Assembly
(Service Sheet 36)

A40 Power Supply Assembly is made up of two subassemblies: A40A1 Rectifier Assembly and A40A2 Regulator Assembly. The Rectifier converts the voltages from the transformer secondary to unregulated voltages. These unregulated voltages are then regulated and distributed to the rest of the instrument by the Regulator.

A41 Line Module and Cable Assembly
(Service Sheet 36)

A41 Line Module and Cable Assembly provides line voltage to A40A1 Rectifier Assembly through Power Transformer T1. The assembly consists of the filtered line module and the front-panel LINE switch.

Scans by ARTEK MEDIA =>

Scans by => ARTEK MEDIA © 2003-2005

Model 8565A

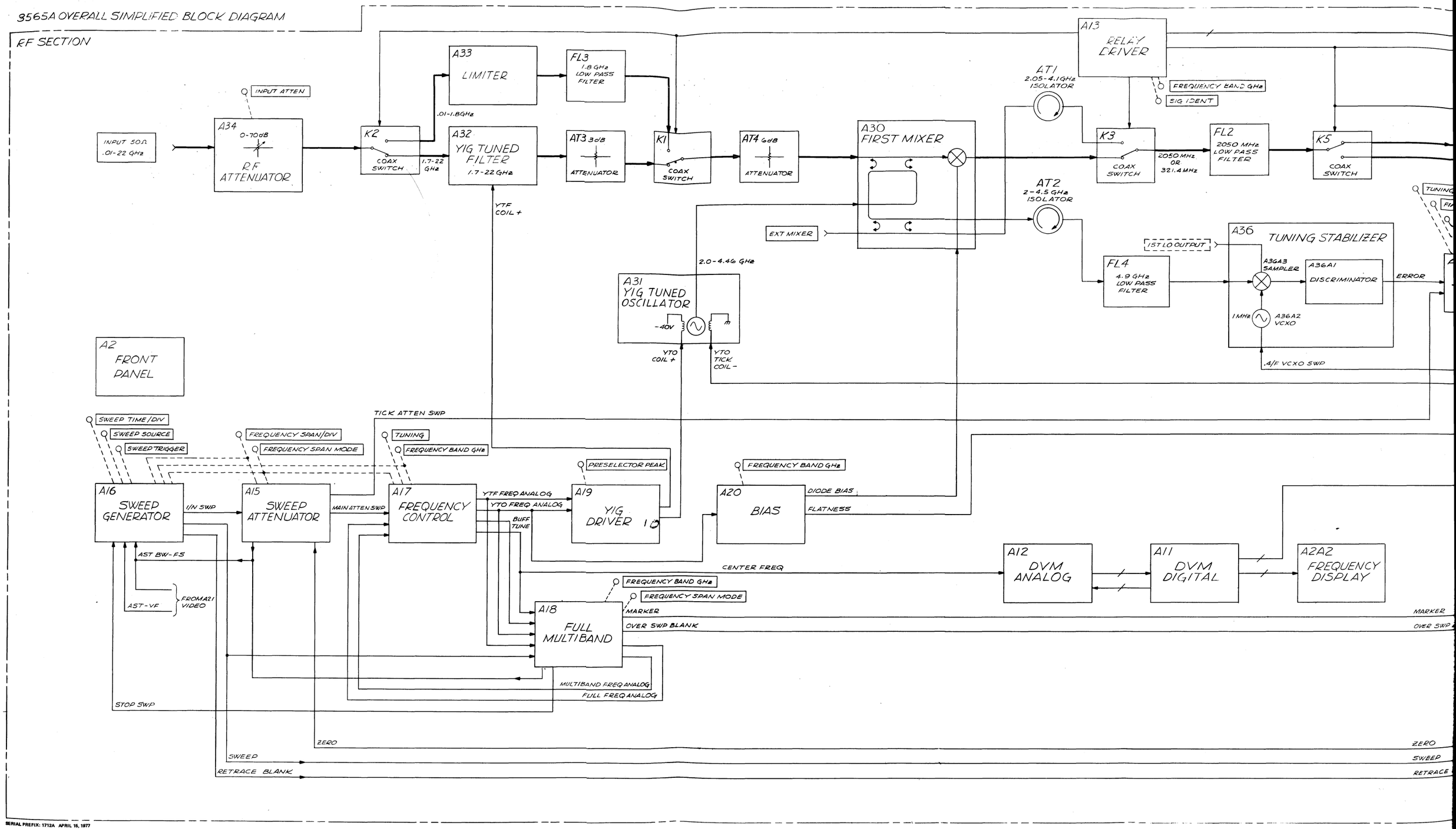

SERIAL PREFIX: 1712A APRIL 15, 1977

Scans by => ARTEK MEDIA © 2003-2005

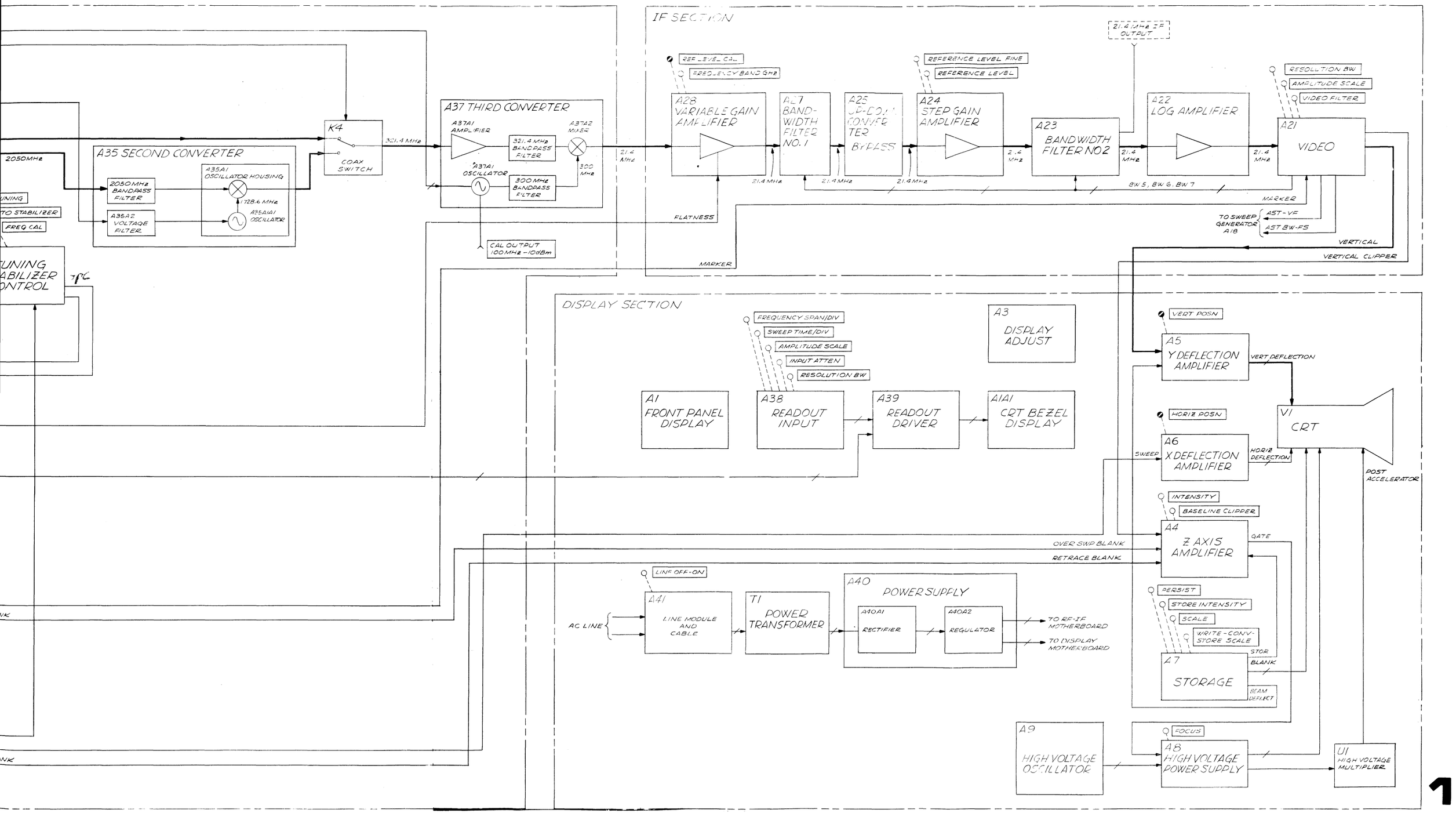

1

Figure 8-1. Overall Block Diagram

SERVICE SHEET 5
A2 FRONT PANEL CONTROL ASSEMBLY, CIRCUIT DESCRIPTION

CAUTION

To avoid erratic rotary switch operation, do not apply lubricant to, or get solder, flux, or other contaminants on, the rotor contact fingers or the PC board contacts.

The Front Panel Control Assembly includes the following subassemblies: A2A1 Front Switch Assembly, A2A2 Frequency Display Assembly, A2A3 Tuning Assembly, A2A4 Rear Switch Assembly, and A2A5 Reference Level Encoder Assembly.

For operational descriptions of the front-panel controls, see Section III. The functional description of a control is given in the description for the circuitry controlled by that control. On the schematic diagrams of the other assemblies, simplified functional switches are shown instead of the actual switch configurations used. This is sufficient, as an aid to troubleshooting, to determine the voltage levels that should be present on the control lines for the different switch settings. However, if a failure is suspected in the Front Panel Control Assembly, this service sheet should be used.

With the exception of some of the lines from the SWEEP SOURCE and SWEEP TRIGGER switches, all the front-panel switches determine dc voltges on control lines and do not directly control signal voltages. Most of the switches in the Front Panel Control Assembly activate control lines by connecting them to +15V; when not activated, the lines are open-circuited at the front panel. These lines are usually pulled down to −15V through 21.5 K resistors located in one or more of the assemblies. Because of the loads on the control lines, they may have voltages of −13V to −15V when the front-panel switches are open. Many of the control lines from the Front Panel Control Assembly go to more than one assembly; therefore, if a control line is not functioning correctly, the problem might be in an assembly other than the first one suspected. All the assemblies connected to the line should be ruled out before the front panel is suspected to be at fault. The connector list in this service sheet gives all the destinations for a control line originating in the Front Panel Control Assembly.

All the potentiometers in the Front Panel Control Assembly set dc voltages at their outputs, except for the 2/F potentiometer A2A3R1, through which passes the VCXO SWP signal.

The diodes associated with the FREQUENCY SPAN/MODE switch are used to perform OR functions between control lines. The diodes associated with the INPUT ATTEN switch are used to clamp back EMF from the relay coils.

Overall Block Diagram
◀ SERVICE SHEET 1

Scans by ARTEK MEDIA =>

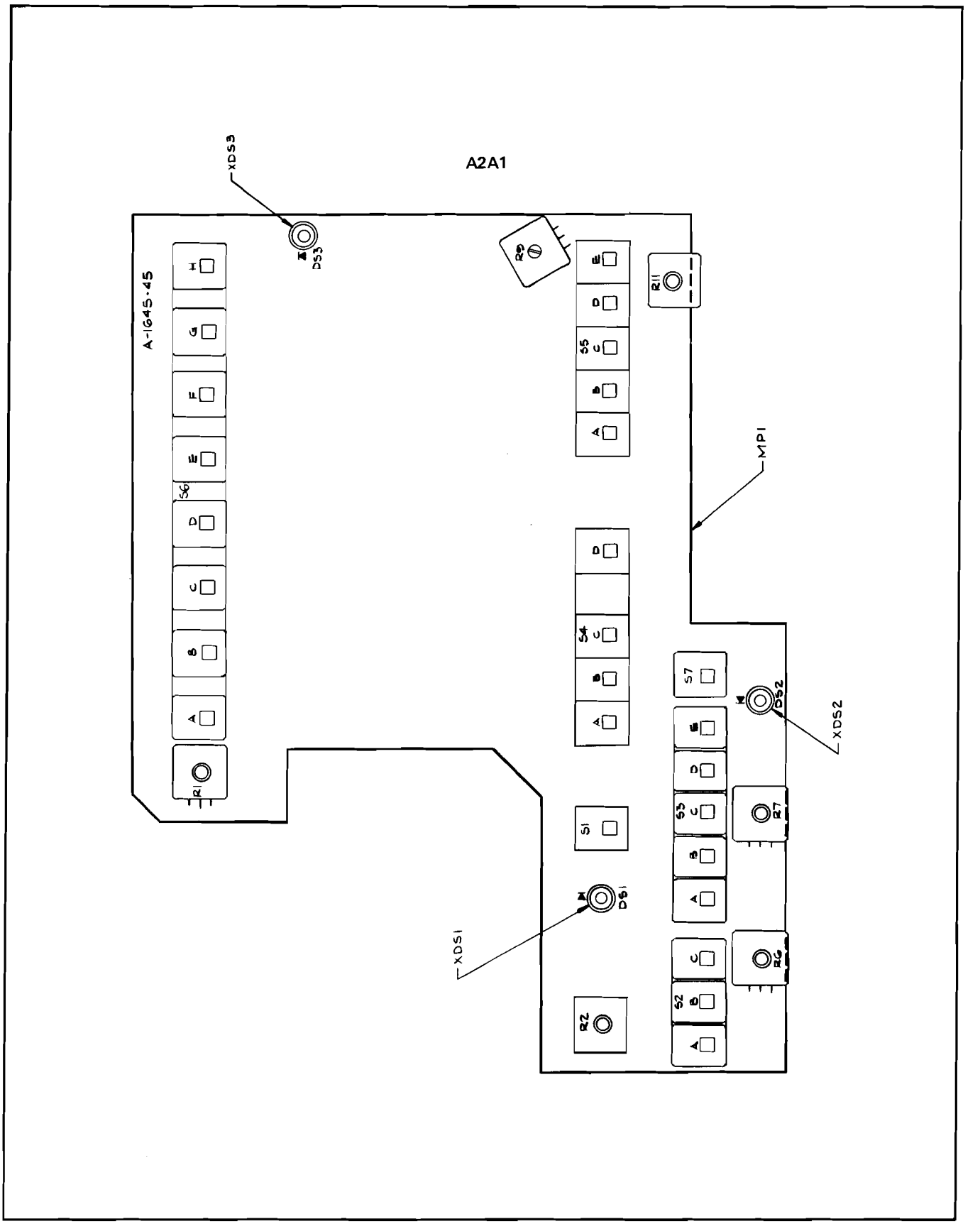

Figure 8-5. A2A1 Front Switch Assembly (Switch Side), Component Locations

Scans by ARTEK MEDIA =>

(To be Supplied)

RF Block Diagram
SERVICE SHEET 2

Figure 8-2. RF Block Diagram

IF Block Diagram
SERVICE SHEET 3

Figure 8-3. IF Block Diagram

Display Block Diagram
SERVICE SHEET 4

Figure 8-4. Display Block Diagram

Scans by ARTEK MEDIA =>

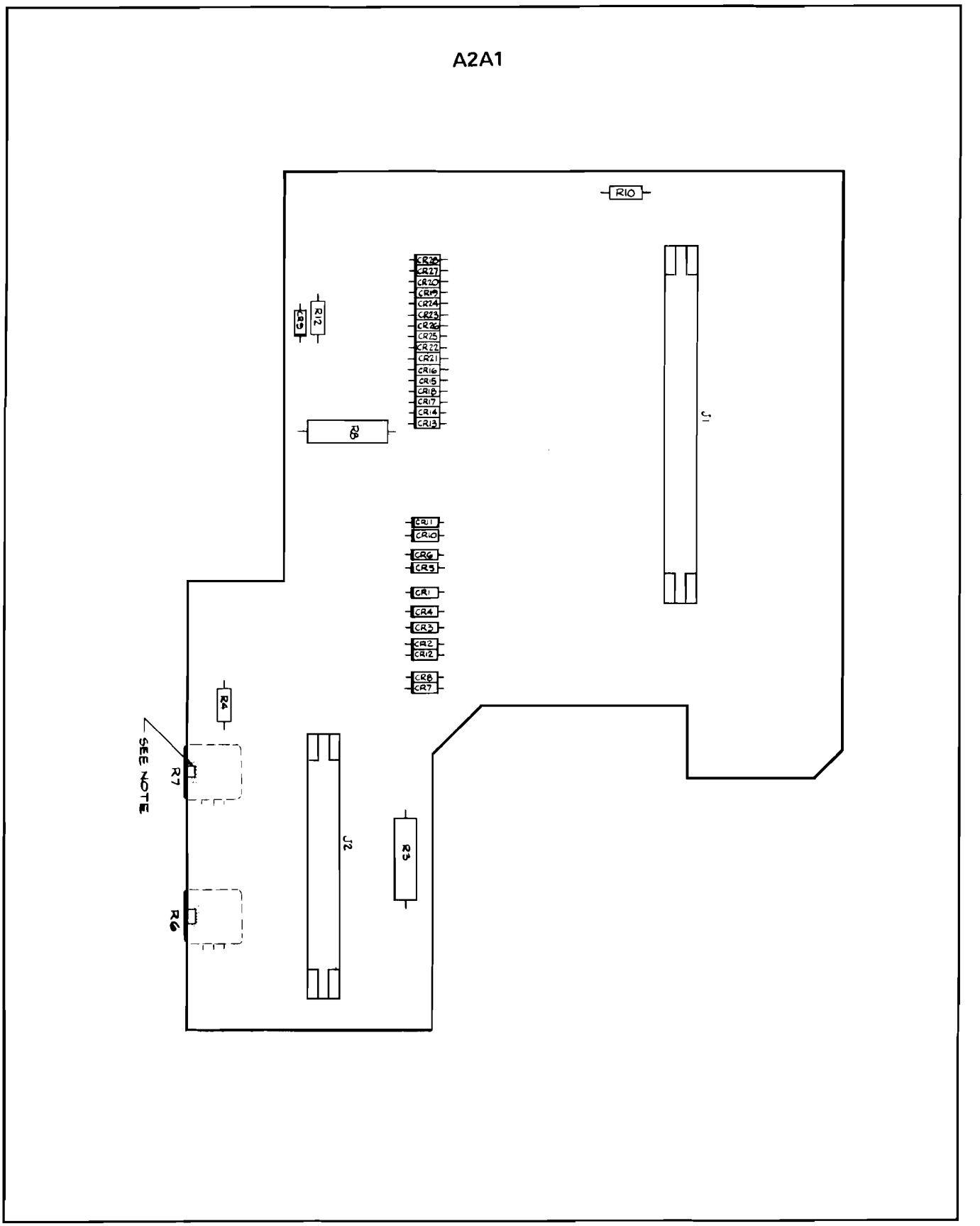

Figure 8-6. A2A1 Front Switch Assembly, (Component Side), Component Locations

Scans by ARTEK MEDIA =>

A2A2

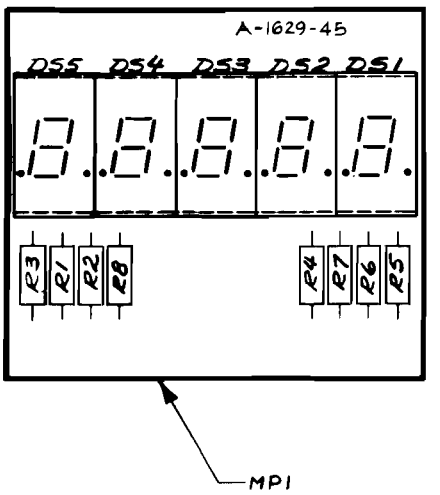

Figure 8-7. A2A2 Frequency Display Assembly, Component Locations

Scans by ARTEK MEDIA =>

A2 *FRONT PANEL ASSEMBLY*
08565-60001

A2A1J1

PIN	SIGNAL	TO/FROM	FUNCTION BLOCK
1	NARROW	A15P1-30, A16P1-42, A38J3-1 A18P1-42, A19P1-15	G
2	B6	A13P1-30, A16P1-20, A17P1-20, A18P1-20, A20P1-20, RPJ2-6 (918)	K
3	B5	A13P1-13, A16P1-19, A17P1-19, A18P1-19 A20P1-19, A28P1-40, RPJ2-5 (917)	K
4	B7	A11P1-14, A13P1-14, A16P1-21 A17P1-21, A18P1-21, A20P1-21	K
5	ZERO	A38J3-5, A14P1-29, A15P1-29	H
6	B8	A11P1-15, A13P1-15, A16P1-22 A17P1-22, A18P1-22, A20P1-22	K
7	B4	A16P1-18, A17P1-18, A18P1-18 A20P1-18, A28P1-39, RPJ2-4 (916)	K
8	1FG6	A22P1-40, A38J3-8	M
9	MULTIBAND	A38J3-9, A17P1-40, A16P1-40, A18P1-40	H
10	1FG5	A22P1-39, A38J3-10	M
11	B3	A16P1-17, A17P1-17, A18P1-17 A20P1-17, A28P1-38, RPJ2-3 (915)	K
12	1FG4	A22P1-38, A38J3-12	M
13	FULL	A38J3-13, A15P1-27, A16P1-39 A17P1-39, A18P1-39	H
14	1FG3	A24P1-33, A38J3-14	M
15	B2	A17P1-16, A18P1-16, A16P1-16 A20P1-16, RPJ2-2 (914)	K
16	1FG2	A24P1-34, A38J3-16	M
17	B1	A13P1-12, A14P1-15, A16P1-13, A17P1-15 A18P1-15, A20P1-15, RPJ2-1 (913)	K
18	1FG1	A24P1-35, A38J3-18	M
19	MAN SWP	A16P1-38, A38J3-19	C
20	FS X2.5	A15P1-11, A16P2-1, A38J3-20	G
21	2ØA2	A34P1-10, A38J3-21	N
22	FS÷2	A15P1-12, A16P2-2, A38J3-22	G
23	2ØA3	A38J3-23, A34P1-9	N
24	FS÷4	A15P1-13, A16P2-3, A38J3-24	G
25	ØA3	A34P1-3	N
26	FS÷10	A15P1-14, A16P2-4, A38J3-26	G
27	1ØA1	A34P1-2, A38J3-27	N
28	FS÷100	A15P1-15, A38J3-28	G
29	ØA2	A34P1-4,	N
30	FSK	A38J3-30	G
31	ØA1	A34P1-13	N
32	FSM	A38J3-32	G
33	+26V RETURN	A40A2J2-3 (7)	N
34	+26V UNREG	A40A2J2-1 (903)	N
35	-15V	A38J3-35, A40A2J2-15 (97)	NOT USED
36	2ØA4	A34P1-5, A38J3-36	N
37	2dB/DIV	A38J3-37, A21P1-23	J
38	+15V	A38J3-30, A40A2J2-11 (92)	NOT USED
39	5dB/DIV	A21P1-32, A38J3-39	J
40	ØA4	A34P1-11	N
41	10dB/DIV	A21P1-31, A38J3-41	J
42	NC		
43	NC		
44	NC		
45	BWØ	A21P1-13, A38J3-45	H
46	NC		
47	BW4	A21P1-17, A38J3-47	H
48	ST FAST	A16P1-37, A38J3-48, A2A4J1-16	C
49	LOG/LIN	A22P1-31, A22P1-31	J
50	ST CAL	A16P1-36, A38J3-50, A2A4J1-18	C

A2A1J2

PIN	SIGNAL	TO/FROM	FUNCTION BLOCK
1	+15V	A40A2J2-11 (92)	W
2	VIDEO TRIG	A21P1-30	D
3	LINE TRIG	A40A2J2-4 (91)	D
4	▽	A29	W
5	-15V2	A40A2J2-15 (97)	W
6	TUNE STAB	A14P1-23	B
7	START/RESET	A16P1-43	D
8	FREQ CAL	A14P1-8	L
9	+5.2V	A40A2J2-10 (912)	W
10	REF LEVEL CAL	A28P1-36, A32-R6, A29R6	O
11	▽1	A29	W
12	TRIG LEVEL	A16P2-10	F
13	EXT SWP	A16P1-10	C
14	TRIG	A16P2-9	D
15	BW COM	A2A4J1-7, A1 (94)	H
16	SWP LIGHT	A16P2-8	I
17	FINE W	A24P1-41, (A29R7)	R
18	MAN SWP LEVEL	A16P2-7	E
19	FINE CW	A24P1-40	R
20	PRESELECT PEAK	A19P1-12	A
21	BW4X	A2A4J1-23	H
22	NC		
23	BWØX	A2A4J1-25	H
24	FMB VF	A21P1-29	H
25	EXT MIX BIAS	A30 (908)	P
26	NC		
27	INT SWP	A16P1-8	C
28	NC		
29	SWEEP	A16P1-9, A18P1-32, A19P1-13 A10R4, A29R10	C
30	-10VTV	A22P1-8	J
31	1MHz/DIV	A13P1-11	H
32	+15V2	A40A2J2-11 (92)	W
33	FREE RUN	A16P1-44	D
34	ATTEN EXT TRIG	A29R4	D

A2A3P1

PIN	SIGNAL	TO/FROM	FUNCTION BLOCK
1	NC		
2	NC		
3	NC		
4	+22.3V REF	A17P1-10 (913)	S
5	+10V REF	A17P1-9 (914)	S
6	TUNE	A17P1-32 (915)	S
7	FINE TUNE	A14P1-9 (916)	S
8	VCXO SWP	A14P1-12 (917)	S
9	2/F VCXO SWP	A14P1-13 (918)	S
10	NC		

A2A2J1

PIN	SIGNAL	TO/FROM	FUNCTION BLOCK
1	NC		
2	CFDf	A11J2-2	Q
3	CFDg	A11J2-3	Q
4	CFDe	A11J2-4	Q
5	CFDd	A11J2-5	Q
6	NC		
7	CFDdp	A11J2-7	Q
8	CFDc	A11J2-8	Q
9	CFDb	A11J2-9	Q
10	CFDa	A11J2-10	Q
11	NC		
12	CFD1	A11J2-12	Q
13	CFD2	A11J2-13	Q
14	CFD3	A11J2-14	Q
15	CFD4	A11J2-15	Q
16	CFD5	A11J2-16	Q

A2A4J1

PIN	SIGNAL	TO/FROM	FUNCTION BLOCK
1	BW2	A21P1-15, A38J1-1	I
2	BW3	A21P1-16	I
3	BW1	A21P1-14, A38J1-3	I
4	BW8	A21P1-21, A26P1-36, A38J1-4	I
5	BW9	A21P1-22, A26P1-37	I
6	BWK	A38J1-6	I
7	BW COM	A2A1J2-15	I
8	STS	A38J1-8	V
9	NOT USED	A29U3-9	I
10	+5.2V	A38J1-10, A40A2J2-10 (912)	NOT USED
11	▽	A38J1-11, A29	V
12	STM	A38J1-12	V
13	STU	A38J1-13	V
14	+10VTV	A16P2-12, A38J1-14	NOT USED
15	GØ	A38J1-15	U
16	ST FAST	A16P1-37, A2A1J1-48	V
17	G1	A38J1-17	U
18	ST CAL	A16P1-36, A2A1J1-50	V
19	G2	A38J1-19	U
20	ST X100	A38J1-20, A16P1-14	V
21	G3	A38J1-21	U
22	ST X10	A38J1-22, A16P1-13	V
23	BW4X	A2A1J2-21	I
24	ST X5	A16P1-12, A38J1-24	V
25	BWØX	A2A1J2-23	I
26	ST X2	A38J1-22, A16P1-11	V

Figure 8-8. A2 Front Panel Control Assembly, Connectors

Scans by => ARTEK MEDIA © 2003-2005

Scans by => ARTEK MEDIA © 2003-2005

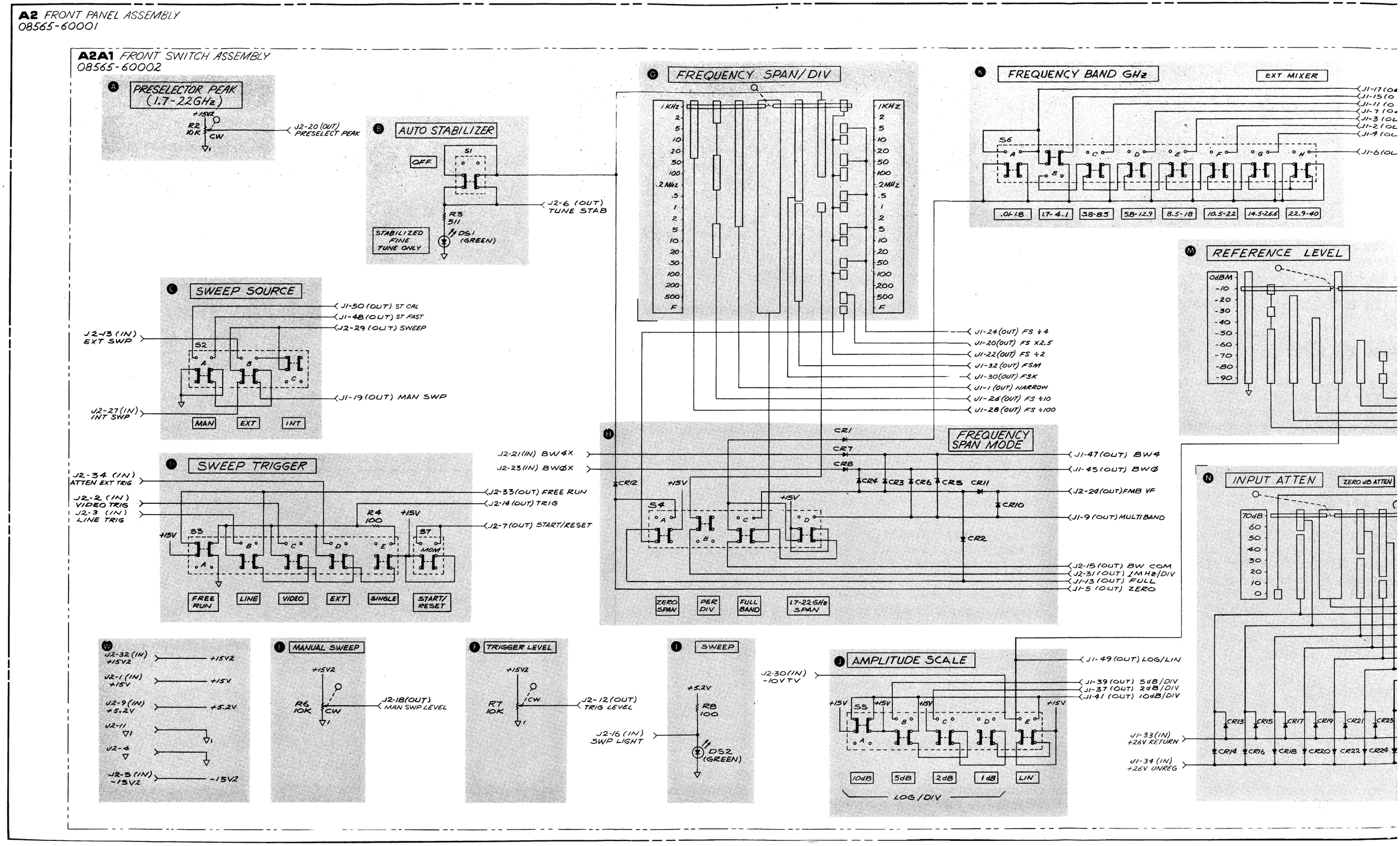

Scans by => ARTEK MEDIA © 2003-2005

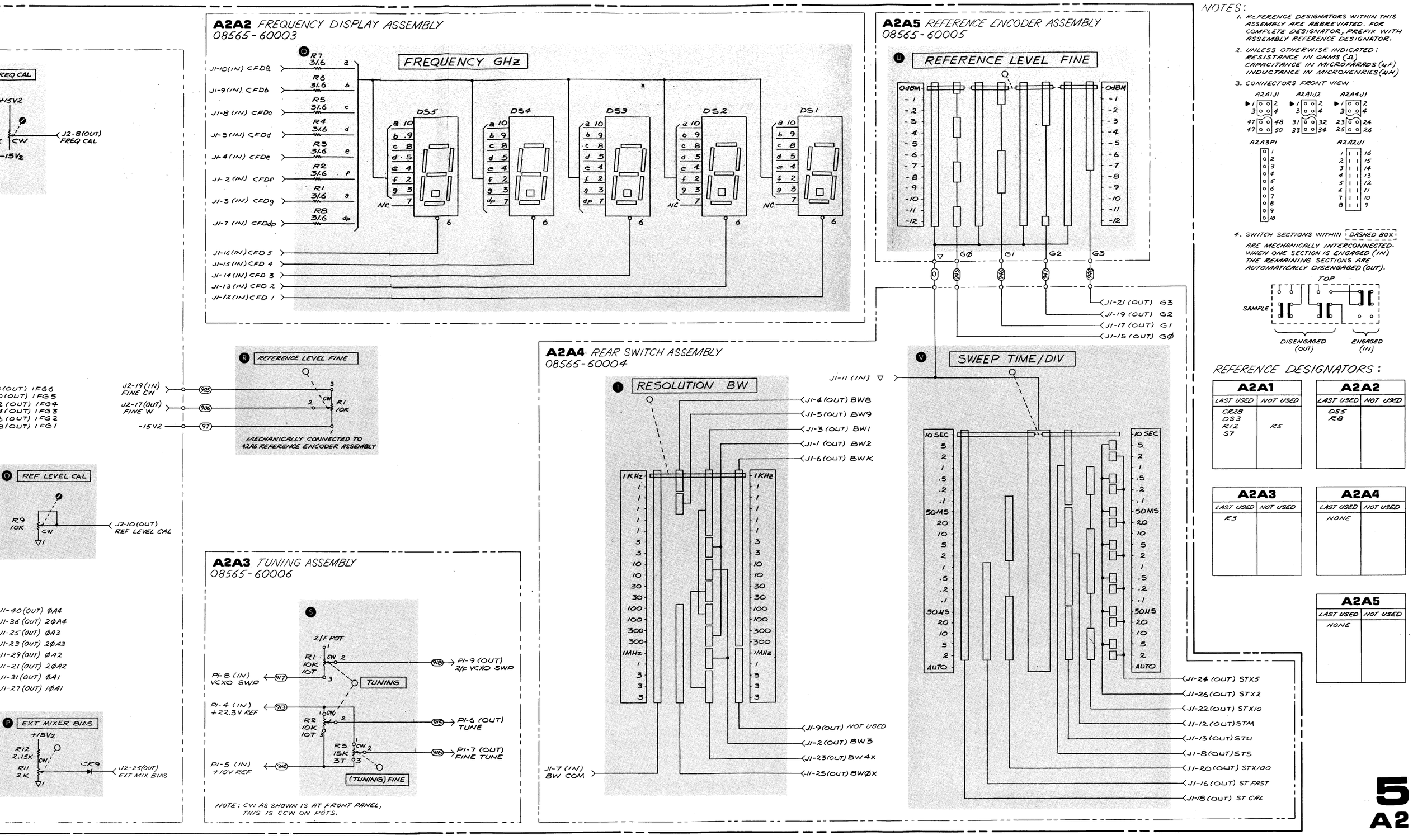

Figure 8-9. A2 Front Panel Control Assembly, Schematic Diagram

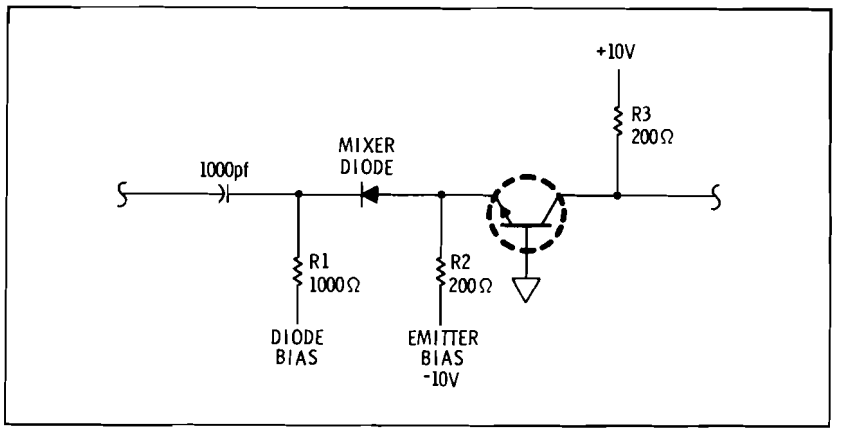

Figure 8-10. A30 First Mixer Assembly, Simplified Schematic

A31 YIG-Tuned Oscillator Assembly (M)

The YTO Assembly is used as the first LO in the analyzer. It is a sealed microcircuit which is not field repairable. It is a transistor oscillator with an yttrium-iron-garnet (YIG) sphere as the resonator. The resonant frequency of the YIG sphere is proportional to the applied magnetic field, which is proportional to the current in two coils (referred to in this manual as the Main Coil and the Tickler Coil). The coarse TUNING control determines the dc current in the Main Coil and tunes the oscillator from 2.0 to 4.46 GHz. The FINE tuning control determines the dc current in the Tickler Coil and tunes the oscillator ±0.5 MHz. The sweep ramp is applied to the Main Coil for wide frequency spans (5 MHz/DIV to 500 MHz/DIV). For narrow frequency spans (1 kHz/DIV to 2 MHz/DIV), the sweep ramp is applied to the Tickler Coil. In the stabilized mode, for spans of 100 kHz/DIV or less, the YTO is locked to a harmonic of the approximately 1 MHz frequency of the Voltage Controlled Crystal Oscillator (VCXO). The ERROR signal from this lock loop is fed back to control the YTO frequency by means of the Tickler Coil.

Two pairs of wires are brought out from the Main Coil. The current (from the YIG Driver Assembly) for driving the Main Coil flows through one pair. The other pair goes to the YTO Main Coil Filter (in the YIG Driver Assembly) which filters out noise applied to the Main Coil for the narrow frequency spans (1 kHz/DIV to 2 MHz/DIV) and ZERO SPAN. The YTO requires −10V and +20V, which are applied through a bias board on the YTO. This bias circuit contains resistors to set the proper bias levels and also zener diodes to protect the internal YTO circuit from overvoltage.

Coax Switch K3 (N)

Coax Switch K3 has either 2050 MHz IF or 321.4 MHz IF going through it. It switches the Second Converter Assembly input to either the First Mixer Assembly output for internal mixing (2050 MHz or 321.4 MHz) or to the external mixing path for the external mixer (2050 MHz). The control for this relay comes from the Relay Driver Assembly.

◀ A2 Front Panel Control Assembly
SERVICE SHEET 5

Scans by ARTEK MEDIA =>

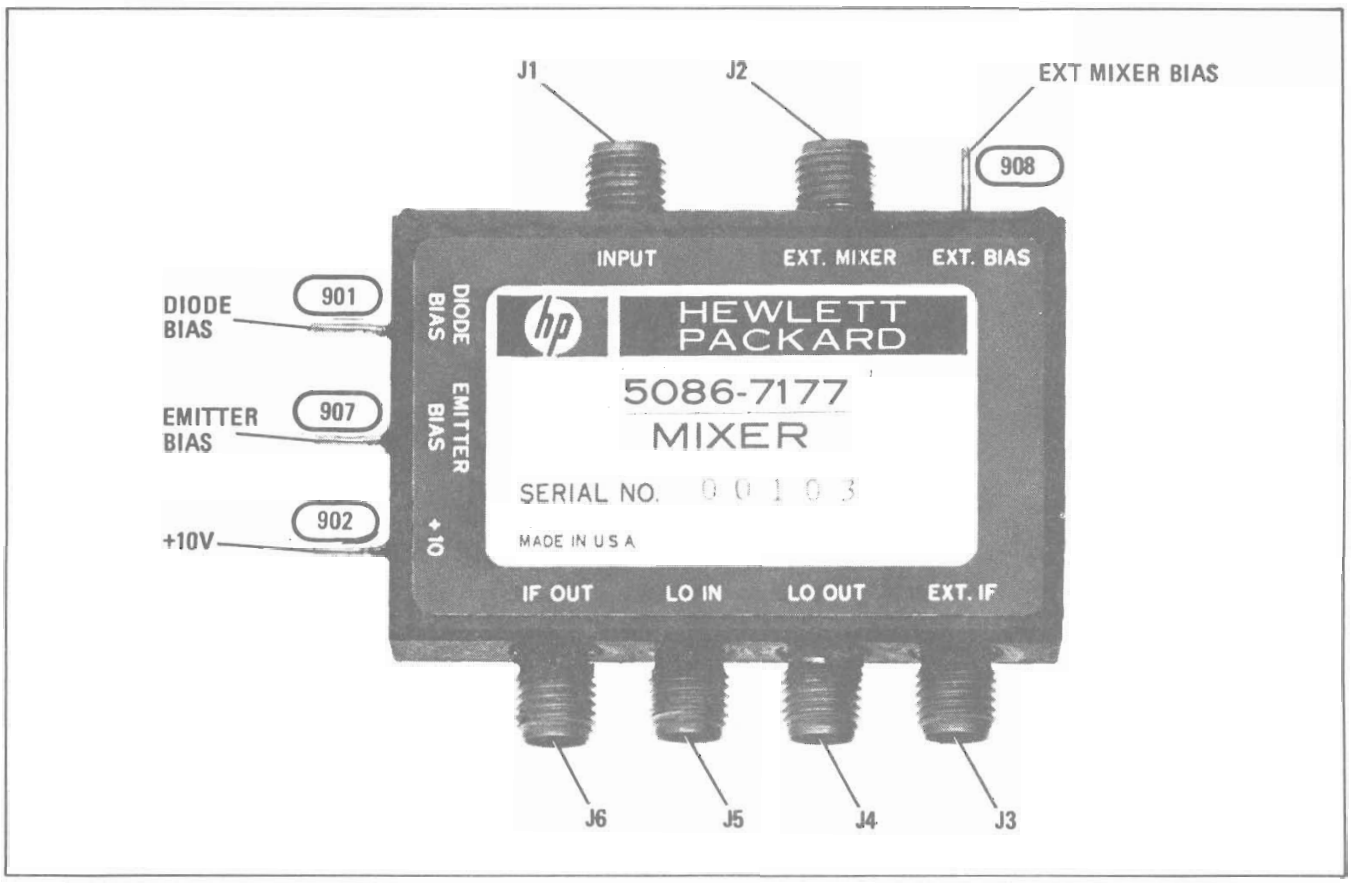

Figure 8-11. A30 First Mixer Assembly

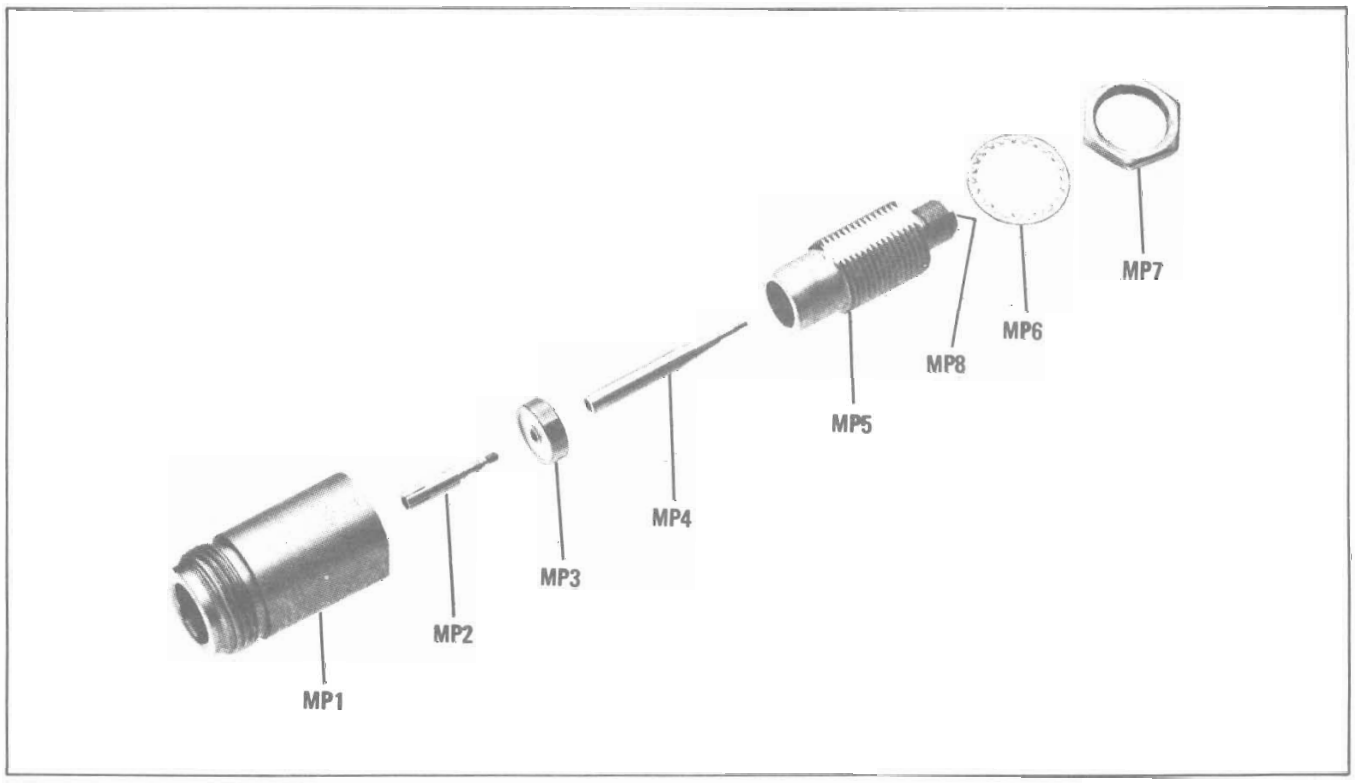

Figure 8-12. INPUT 50Ω Connector J11, Exploded View

Scans by ARTEK MEDIA =>

Scans by => ARTEK MEDIA © 2003-2005

SERVICE SHEET 6

A30, A31, A32, A33, A34 RF INPUT ASSEMBLIES, CIRCUIT DESCRIPTION

CAUTION

While working with and around the semi-rigid coaxial cables connected to the RF Input Assemblies, do not bend the cables more than necessary. Do not torque the RF connectors to more than 2 inch-pounds. Be especially careful when working on the connectors on the First Mixer Assembly.

The RF Input Assemblies include A30 First Mixer Assembly, A31 YTO Assembly, A32 YTF Assembly, A33 Limiter, and A34 RF Attenuator Assembly, as well as three coax switches, two pads, two low-pass filters, and two isolators.

A34 RF Attenuator Assembly A

The RF Attenuator Assembly is an attenuator that is programmable from 0 dB to 70 dB in 10-dB steps. It consists of four attenuation sections that can be inserted or removed from the signal line by latching self-disconnecting relays. Three of the sections have 20-dB attenuation and the fourth, 10-dB attenuation over the frequency range from .01 to 22 GHz. There is a common control line to the relays (+26V UNREG), and each relay has two wires: one for switching an attenuation section in, and the other for switching it out. Switching is accomplished by grounding of the control lines. A switch associated with each relay opens the control line path after switching has occurred. Thus, the relay draws current only during the actual switching operation. The control lines for the attenuator are activated by the INPUT ATTEN control at the front panel.

Coax Switches K2 and K1 B G

K2 and K1 are dc to 22 GHz coax switches. For FREQUENCY BAND GHz .01 — 1.8, they switch the Limiter and the 1.8 GHz Low-Pass Filter into the signal line. For the other internal-mixing FREQUENCY BAND GHz settings, covering 1.7 to 22 GHz, the YTF Assembly is switched into the signal line. The control for these relays comes from the Relay Driver Assembly.

A33 Limiter C

The Limiter contains diodes which clamp the voltage on the signal line to protect the First Mixer diode from excessive power and peak voltage levels applied to the 50Ω INPUT of the analyzer. The Limiter is used only in FREQUENCY BAND GHz .01 — 1.8.

1.8 GHz Low-Pass Filter D

The 1.8 GHz Low-Pass Filter FL3 is used in FREQUENCY BAND GHz .01 — 1.8 to filter out signals above the frequency band range, reducing the level of the image and multiple responses with the 2.0 to 4.46 GHz first LO signal from the YIG-Tuned Oscillator (YTO). Fundamental mixing is used for the two lowest frequency bands, and harmonic mixing (N = 2, 3, 4, and 5) is used for the other internal mixing bands.In harmonic mixing, the outputs are the sum and difference frequencies of the input and N times the LO. For some bands the sum frequency is used, and for others, the difference frequency. The mixing equation is:

$$fs = Nf_{LO} \pm f_{IF}$$

The IF Frequency is 2050 MHz for the FREQUENCY BAND GHz setting of .01 — 1.8 and is 321.4 MHz for the other internal-mixing settings of 1.7 — 22. (See schematic Note 5 for FREQUENCY BAND GHz versus harmonic number N and IF frequency.) Conversion loss of the mixer is approximately 10 dB for fundamental mixing. The output of the YTO is coupled into both the internal mixer and the transmission path for the external mixer via internal directional couplers. In addition, the YTO signal is fed through the First Mixer Assembly to the Sampler in the Tuning Stabilizer Assembly via the isolator AT2 and the 4.9 GHz Low-Pass Filter. Internal mixer DIODE BIAS is supplied from the Bias Assembly. A different bias is used for each harmonic to provide optimum conversion loss and flatness for that particular harmonic mixing mode. External mixer bias is supplied from the front panel EXT MIXER BIAS adjustment through the First Mixer Assembly to the EXT MIXER connector at the front panel. Three different signals pass through the EXT MIXER port: the dc bias goes to the external mixer diode, the first LO goes to the mixer, and the 2050 MHz IF comes back from the external mixer through the First Mixer Assembly and through isolator AT1 and coax switch K3 to the Second Converter Assembly. In addition to mixer bias, the First Mixer Assembly requires both −10V and +10V for operation. These voltages supply power to the transistor buffer in the assembly.

First Mixer Assembly Troubleshooting. When a malfunction has been isolated to the input mixer, see the simplified schematic, Figure 8-10, to confirm mixer failure. Check diode bias on internal mixing bands. Voltages should be in the range of −1V to −10V. The exact bias voltage is factory determined for each First Mixer Assembly and FREQUENCY BAND GHz setting. The buffer transistor can be checked by comparing the collector and emitter currents. Disconnect the −10V lead at the emitter bias terminal and measure emitter current with a milliammeter such as the HP 412A. Connect −10V lead and repeat measurement procedure at the +10V terminal. The emitter current should be 18.5 mA ±20 percent. The collector current should be not more than 10 percent less than the emitter current. To check the mixer diode, turn instrument power off, disconnect DIODE BIAS lead, and check front to back ratio of diode circuit. Set HP 412A to 1KΩ position, connect red (positive) lead to DIODE BIAS pin and black (negative) lead to EMITTER BIAS pin. Reading should be greater than 10 megohms. Less than 10 megohms indicates a shorted diode. Reverse leads; reading should be between 1KΩ and 10KΩ. (Infinity indicates open diode.)

in the analyzer. This filter needs to have good rejection at 2050 MHz, which is the first IF for this frequency band, to reduce baseline lift caused by an input signal at this frequency.

A32 YIG-Tuned Filter Assembly E

The YTF Assembly is used as a preselector in the analyzer for the internal-mixing FREQUENCY BAND GHz settings covering 1.7 to 22 GHz. Its purpose is to reduce image, multiple, and spurious responses. The YTF has three YIG spheres as the resonators (providing a 3-pole filter) with coupling to the spheres accomplished with coupling loops. The input coupling loop is connected to ground; thus, the filter is a short to ground for dc and low frequencies. The resonant frequency of the YIG spheres is proportional to the applied magnetic field, which is proportional to the current in the YTF Coil. The current in the coil (from the YIG Driver Assembly) is controlled to track the YTF frequency to the YTO (first LO) frequency with a 321.4 MHz offset (see schematic Note 5).

6 dB and 3 dB Pads F H

The 6 dB pad AT4 provides isolation between the First Mixer Assembly and the YTF Assembly or the 1.8 GHz Low-Pass Filter. The 3 dB pad AT3 provides additional isolation between the YTF Assembly and the First Mixer Assembly. The isolation achieved by these pads improves the frequency response of the analyzer, but at a sacrifice in sensitivity.

Isolators AT2 and AT1 J K

The YTO signal is fed through the First Mixer Assembly, Isolator AT2, and the 4.9 GHz Low-Pass Filter before going to the Sampler in the Tuning Stabilizer Assembly. This isolator buffers the First Mixer Assembly from the Sampler for the first LO frequencies of 2 —4.5 GHz. The 2050 MHz IF signal from the external mixer goes through isolator AT1 and Coax Switch K3 to the Second Converter Assembly. The isolator buffers the high VSWR of the Second Converter Assembly at the First LO frequencies for the external mixer of 2.05 — 4.1 GHz.

4.9 GHz Low-Pass Filter L

The 4.9 GHz Low-Pass Filter FL4 is in the signal path between the First Mixer Assembly and the Sampler in the Tuning Stabilizer Assembly. Its function is to filter out the third harmonic of the YTO signal which is applied to the Sampler.

A30 First Mixer Assembly I

The First Mixer Assembly is a sealed microcircuit which is not field repairable. The unit mixes the .01 to 22 GHz input signals

A30 First Mixer Assembly
A31 YIG-Tuned Oscillator Assembly
A32 YIG-Tuned Filter Assembly
A33 Limiter, A34 RF Attenuator Assembly
SERVICE SHEET 6

Scans by ARTEK MEDIA =>

Scans by => ARTEK MEDIA © 2003-2005

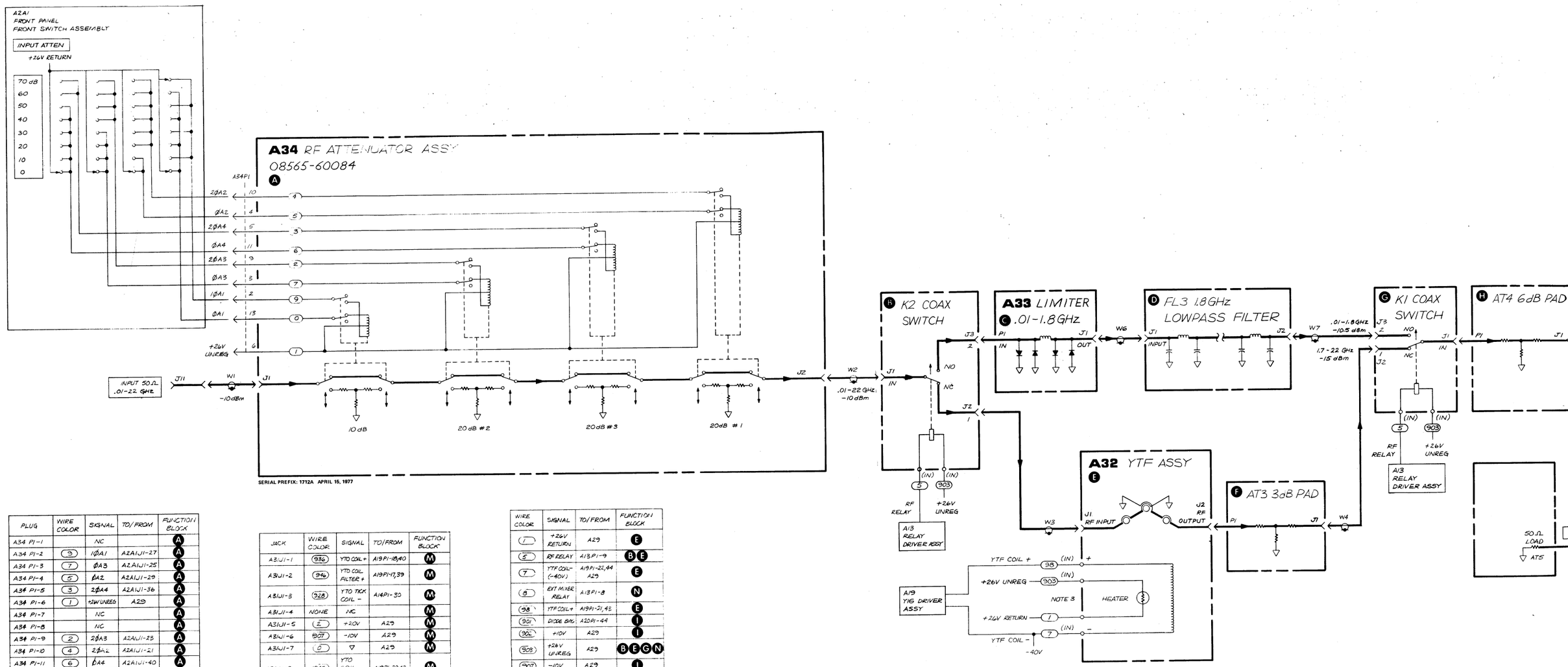

SERIAL PREFIX: 1712A APRIL 15, 1977

PLUG	WIRE COLOR	SIGNAL	TO/FROM	FUNCTION BLOCK
A34 P1-1		NC		A
A34 P1-2	5	10A1	A2A1J1-27	A
A34 P1-3	7	0A3	A2A1J1-25	A
A34 P1-4	5	0A2	A2A1J1-23	A
A34 P1-5	3	20A4	A2A1J1-36	A
A34 P1-6	1	+26V UNREG	A23	A
A34 P1-7		NC		A
A34 P1-8		NC		A
A34 P1-9	2	20A3	A2A1J1-23	A
A34 P1-10	4	20A2	A2A1J1-21	A
A34 P1-11	6	0A4	A2A1J1-40	A
A34 P1-12	8	NC	A23	A
A34 P1-13	0	0A1	A2A1J1-21	A
A34 P1-14		NC		A

JACK	WIRE COLOR	SIGNAL	TO/FROM	FUNCTION BLOCK
A31J1-1	936	YTO COIL +	A19P1-18,40	M
A31J1-2	946	YTO COIL FILTER +	A19P1-17,39	M
A31J1-3	928	YTO TKK COIL -	A14P1-30	M
A31J1-4	NONE	NC		M
A31J1-5	2	+20V	A23	M
A31J1-6	907	-10V	A23	M
A31J1-7	0	▽	A23	M
A31J1-8	945	YTO COIL FILTER-	A19P1-20,42	M
A31J1-9	7	YTO COIL- (-40V)	A19P1-19,41 A23	M

WIRE COLOR	SIGNAL	TO/FROM	FUNCTION BLOCK
1	+26V RETURN	A23	E
5	RF RELAY	A13P1-9	B E
7	YTF COIL- (-40V)	A19P1-22,44 A23	E
8	EXT MIXER RELAY	A13P1-8	N
98	YTF COIL +	A19P1-21,43	E
901	DIODE BIAS	A2D1-44	I
902	+10V	A23	I
903	+26V UNREG	A23	B E G N
907	-10V	A23	I
908	EXT MIXER BIAS	A2A1J2-25	I

Scans by => ARTEK MEDIA © 2003-2005

NOTES:
1. REFERENCE DESIGNATORS WITHIN THIS ASSEMBLY ARE ABBREVIATED. FOR COMPLETE DESIGNATOR, PREFIX WITH ASSEMBLY REFERENCE DESIGNATOR.
2. UNLESS OTHERWISE INDICATED:
   RESISTANCE IN OHMS (Ω)
   CAPACITANCE IN MICROFARADS (μF)
   INDUCTANCE IN MICROHENRIES (μH)
3. HEATER NOT USED ON ALL YTF ASSEMBLIES.
4. SIGNAL LEVELS ASSUME FOLLOWING SETTINGS:
   INPUT ATTEN: 0dB
   FREQUENCY SPAN MODE: ZERO SPAN
   SIGNAL AT ANALYZER INPUT
   100 MHz -10dBm (CAL OUTPUT) FOR .01 - 1.8 GHz BAND
   2 GHz -10dBm FOR 1.7-4.1 GHz BAND
   ANALYZER TUNED TO SIGNAL

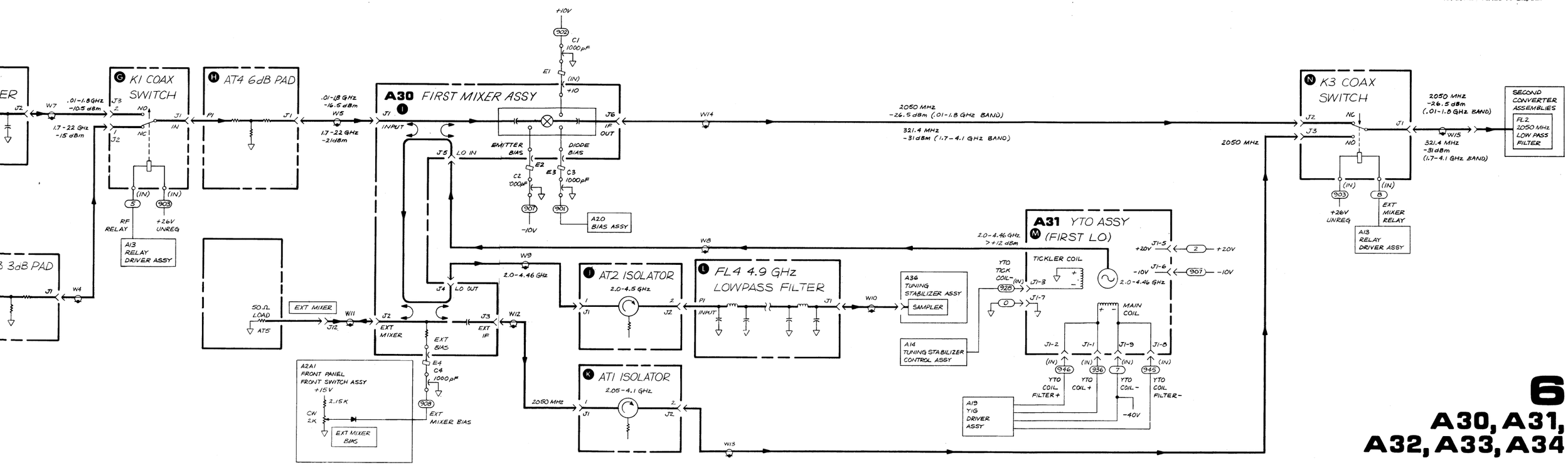

6
A30, A31, A32, A33, A34

Figure 8-13. A30 First Mixer Assembly, A31 YIG-Tuned Oscillator Assembly, A32 YIG-Tuned Filter Assembly, A33 Limiter, A34 RF Attenuator Assembly, Schematic Diagram

SERVICE SHEET 7
A35 SECOND CONVERTER ASSEMBLY, CIRCUIT DESCRIPTION

The Second Converter Assembly includes three subassemblies: A35A1 Second Converter Oscillator Housing Assembly, A35A1A1 Second Converter Oscillator Assembly, and A35A2 Second Converter Voltage Filter Assembly.

The IF signal from the First Mixer Assembly is coupled into the Second Converter bandpass filter through coupling loop A35L3. The bandpass filter consists of three circular, slug-tuned cavity resonators operating as less than quarter wavelength inductive transmission lines. The cavities provide high Q for good selectivity at 2050 MHz. Coupling loops A35L2 and A35L3 provide coupling between the cavities. The 2050 MHz signal is loop-coupled to the cathode of the second mixer diode A35A1CR1.

The second local oscillator is a Colpitts type circuit operating at 1728.6 MHz. The capacitive "fingers" etched on the A35A1A1 Second Converter Oscillator Assembly printed circuit board and the internal capacitances of A35A1A1Q1 provide the positive feedback necessary to sustain oscillation of the second LO. The oscillator tank circuit is a slug-tuned cavity, A35C4. The signal from the second LO is coupled into the cavity by a 4-40 machine screw extending down into the cavity. The second LO output is also available at test jack A35J3.

A35A1 Second Converter Oscillator Housing Assembly

The 1728.6 MHz local oscillator provides drive for A35A1CR1. The difference frequency between the first IF 2050 MHz, and the second LO frequency, 1728.6 MHz, is 321.4 MHz. This 321.4 MHz signal is coupled through the matching filter to the Third Converter Assembly.

The matching filter is a passive network designed to match the relatively high impedance (about 200 ohms) of the second mixer to the low input impedance (about 50 ohms of the Third Converter Assembly. The match may be optimized by adjusting A35A1L2, 2ND MIXER MATCH.

A35A2 Second Converter Voltage Filter Assembly

The Second Converter Voltage Filter supplies the dc bias to the Second Converter Oscillator Assembly. The +20V is filtered by A35A2R1 and A35A2C1 and is reduced to about +15V by the drop across A35A2R1. The negative bias voltage (−10V) is filtered through A35A2R2 and A35A2C2. The voltage at the oscillator is approximately −5V.

A35A2Q1 functions as a switch to turn the oscillator on or off. When the dc control line SW is at ground, A35A2VR1 is back-biased and the transistor is turned on through A35A2R3. To turn off the transistor, SW goes to approximately +26V, which breaks down A35A2VR1 and back-biases A35A2CR1, turning A35A2Q1 off.

Scans by ARTEK MEDIA =>

Scans by => ARTEK MEDIA © 2003-2005

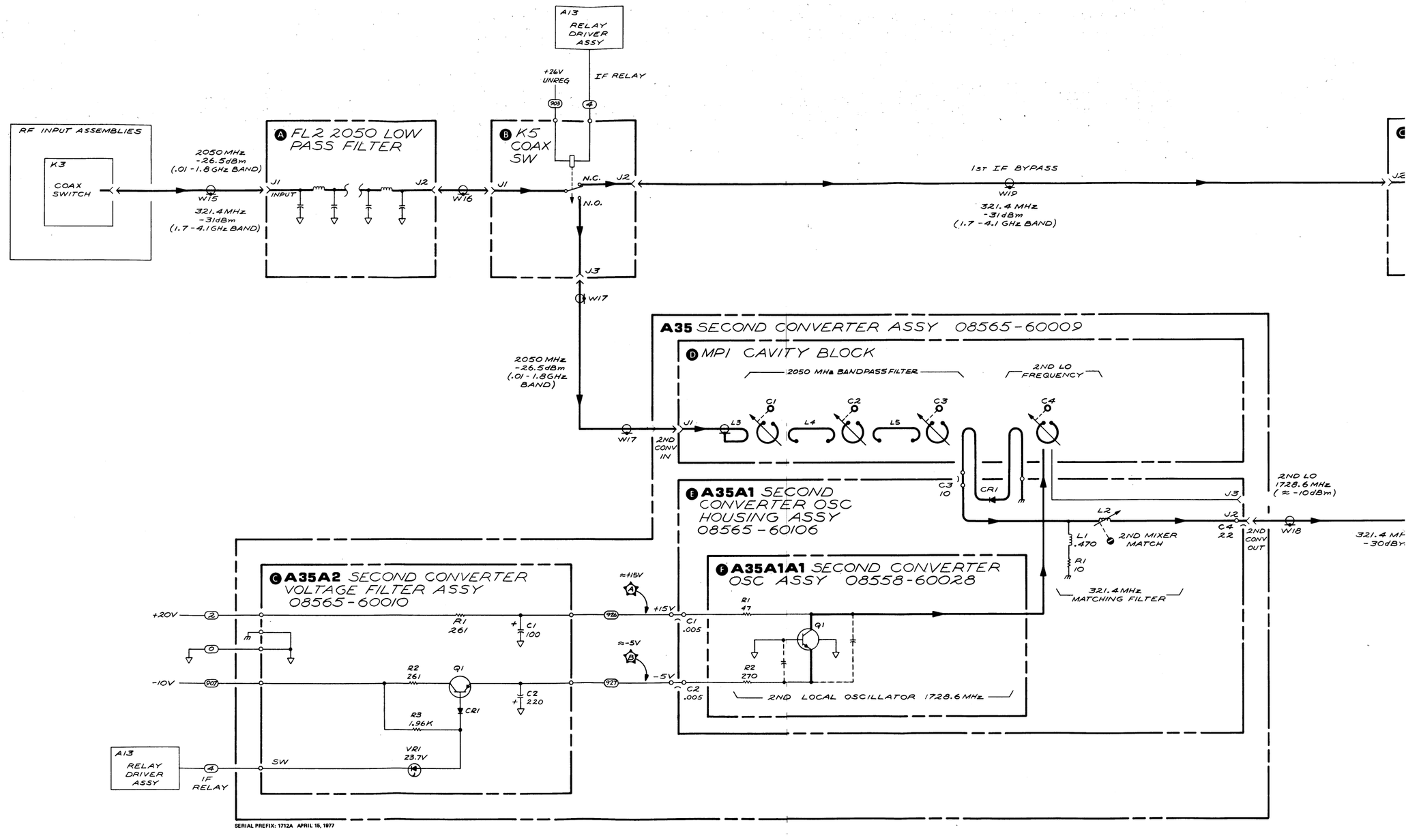

WIRE COLOR	SIGNAL	TO/FROM	FUNCTION BLOCK
0	GND	A29	C
2	+20V	A29	C
4	IF RELAY	A13 P1-7	B C G
903	+26V UNREG	A29	B G
907	-10V	A29	C

SERIAL PREFIX: 1712A APRIL 15, 1977

Scans by => ARTEK MEDIA © 2003-2005

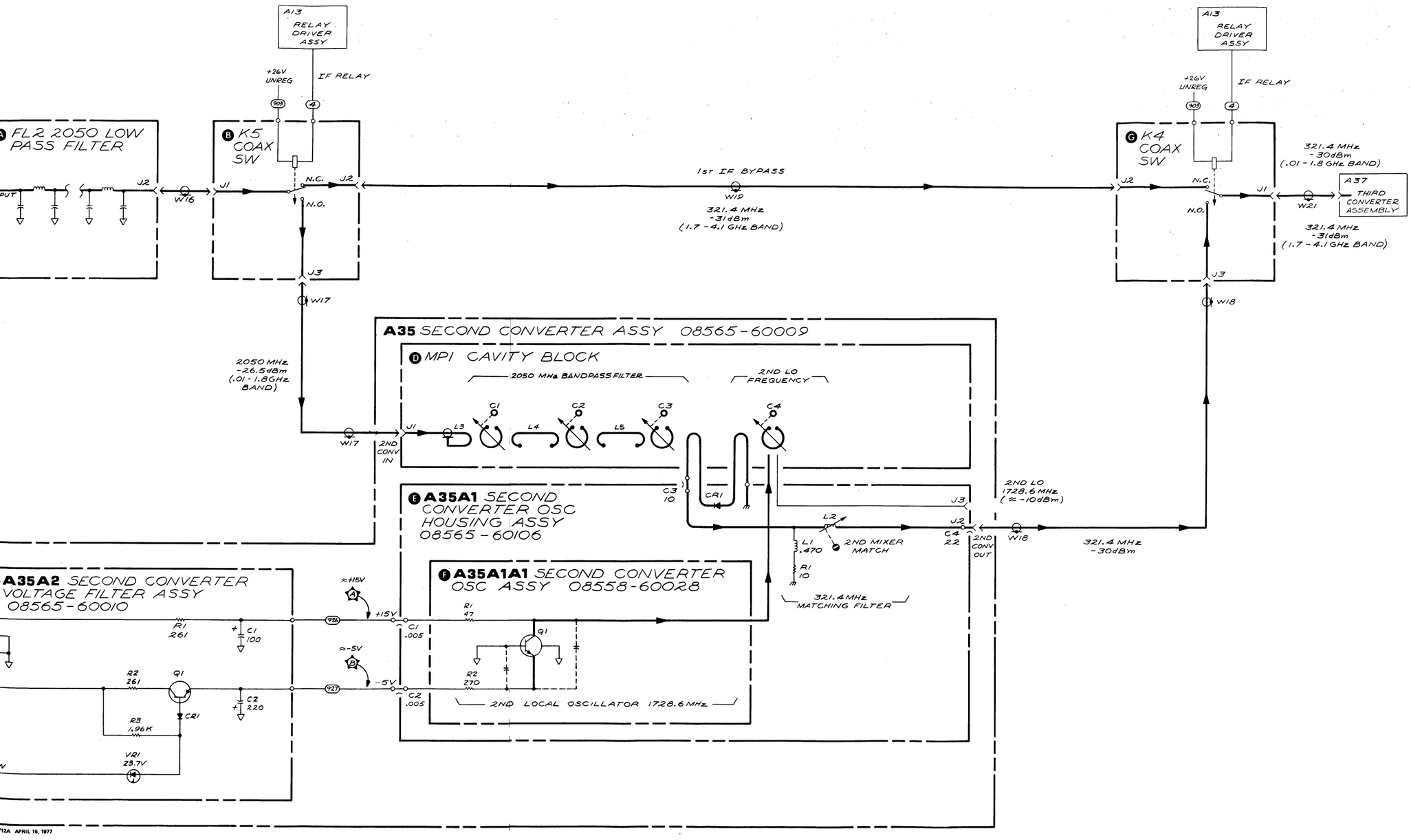

NOTES:

1. REFERENCE DESIGNATORS WITHIN THIS ASSEMBLY ARE ABBREVIATED. FOR COMPLETE DESIGNATOR, PREFIX WITH ASSEMBLY REFERENCE DESIGNATOR.
2. UNLESS OTHERWISE INDICATED:
   RESISTANCE IN OHMS (Ω)
   CAPACITANCE IN MICROFARADS (μF)
   INDUCTANCE IN MICROHENRIES (μH)
3. SIGNAL LEVELS ASSUME FOLLOWING SETTINGS:
   INPUT ATTEN: 0dB
   FREQ SPAN MODE: ZERO SPAN
   SIGNAL AT ANALYZER INPUT
   100MHz, -10dBm (CAL OUT) FOR .01 - 1.8 GHz BAND
   2 GHz -10dBm FOR 1.7 - 4.1 GHz BAND
   ANALYZER TUNED TO SIGNAL
4. REFERENCE DESIGNATORS:

A35	
LAST USED	NOT USED
C4 J1	

A35A1	
LAST USED	NOT USED
C4 CR1 J3 L2 R1	J1

A35A1A1	
LAST USED	NOT USED
Q1 R2	

A35A2	
LAST USED	NOT USED
C2 CR1 Q1 R3 VR1	

7
A35

Figure 8-14. A35 Second Converter Assembly, Schematic Diagram

SERVICE SHEET 8
A37 THIRD CONVERTER ASSEMBLY, CIRCUIT DESCRIPTION

The Third Converter Assembly contains circuitry to amplify and down-convert to 21.4 MHz the 321.4 MHz signal from coax switch K4. The conversion gain in the Third Converter Assembly is approximately 11 dB. The Third Converter Assembly also contains circuitry to provide the −10 dBm, 100 MHz CAL OUTPUT signal at the front panel and circuitry for signal identification. Figure 8-15 shows a simplified block diagram of this assembly.

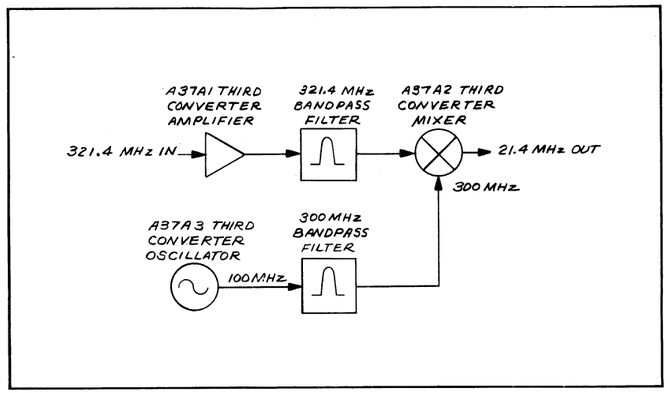

Figure 8-15. Third Converter Assembly, Block Diagram

A37A1 Third Converter Amplifier (A)

The Third Converter Amplifier provides a broad-band fixed gain of approximately 20 dB to the incoming 321.4 MHz IF signal. The amplifier is a single-stage, common-emitter transistor amplifier whose gain is determined by the high-frequency characteristics of A1Q1, input matching capacitor A1C1, and the output matching elements A1L1, A1R5, and A1C6. Also included is a 700 MHz low-pass filter consisting of two shunt transmission line capacitors and two series transmission line inductors. This low-pass filter attenuates the first LO feedthrough to prevent overloading of the amplifier when the first LO is tuned to approximately 2200 MHz and below.

Bias to the RF amplifier transistor A1Q1 is provided by A1Q2 and A1R1 through A1R4. Note that Q2 and associated components are decoupled from the RF signal by A1C4 and A1C5.

321.4 MHz Bandpass Filter (C)

The 321.4 MHz Bandpass Filter is used to limit the signal power applied to the Third Converter Mixer to a 3 dB bandwidth of about 7 MHz centered at 321.4 MHz. It uses four helical resonators which are tap-coupled at the input and output and slot-coupled to each other. The resonators are capacitively tuned by tuning slugs C1 through C4. J5 provides a test port for filter alignment.

A37A2 Third Converter Mixer (H)

The Third Mixer converts the IF signal from the 321.4 Mhz Bandpass Filter to 21.4 MHz, using the signal from the 300 MHz Bandpass Filter as the local oscillator. The Third Converter Mixer is an unbalanced triply tuned mixer. The 321.4 MHz input signal is fed to mixer diodes A2CR1 and A2CR2. It is switched on and off to the 21.4 MHz output at a 300 MHz rate by the 300 MHz local oscillator signal. A2CR1 and A2CR2 are used in parallel to reduce resistance when the diodes are on. Output matching network A2L1 through A2L3 and A2C2 transforms the impedance seen at the cathodes of A2CR1 and A2CR2 to approximately 50Ω. It also provides an open circuit for the 321.4 MHz IF signal and 300 MHz local oscillator signal.

The mixer is triply tuned in the sense that power from any one of the three signals present in the mixer (321.4 MHz, 300 MHz, and 21.4 MHz) cannot be lost in a port that is used for the other two signals. For example 321.4 MHz power cannot be directly lost out the 21.4 MHz port, because L2 is essentially an open circuit at 321.4 MHz; nor can it be lost out the 300 MHz LO port, because the 300 MHz Bandpass Filter is reflective at 321.4 MHz.

A37A3 Third Converter Oscillator

The Third Converter Oscillator contains a 100 MHz Crystal Oscillator. This oscillator drives a Frequency Tripler, which amplifies and triples the 100 MHz signal to provide a high level 300 MHz signal to drive the Third Converter Mixer. It also contains a Limiter, which provides an amplitude-stable, temperature-compensated −10 dBm signal. This signal is filtered by the 150 MHz Low-pass Filter to remove harmonics produced in the Limiter. A Regulator provides dc bias voltages to the 100 MHz crystal oscillator and limiter.

100 MHz Crystal Oscillator (D) . The 100 MHz Crystal Oscillator is a grounded-base Colpitts oscillator which uses a series resonant, fifth overtone crystal in the collector to emitter feedback path to achieve frequency stability and low noise. A3Q2 provides unity current gain from the emitter to the collector. The current at the collector is transformed up by tank circuit A3L4, A3C12, and A3C13 and then fed back to the emitter through series resonant crystal A3Y1, A3Y2, or A3Y3 and associated PIN switching diode A3CR1, A3CR2, or A3CR3. The tank circuit A3L4, A3C12, and A3C13 is a frequency-selective transformer which also prevents the oscillator from oscillating at other overtones of the crystal. Output power is tapped out of the tank through A3C14 to resistive network A3R20, A3R21, A3R19, and A3R22, which distributes the output power and provides a constant load to the oscillator. The 100 MHz Crystal Oscillator is capable of oscillating at the series resonance of either of the three crystals A3Y1, A3Y2, or A3Y3. In normal operation, control line F3 is pulled down to approximately 0V, turning on PIN diode A3CR2 to provide an RF feedback path through A3Y2. Control lines F3− and F3+ are open, and pull-up resistors A3R13 and A3R15 back bias A3CR1 and A3CR3, keeping them off to open the RF feedback paths through A3Y1 and A3Y3. During Signal Identifier operation (available on 1 MHz/DIV span only), control line F3 is switched between 0V and +20V on alternate sweeps, with either F3− or F3+ (depending on which frequency band is selected) being switched to 0V when F3 is switched to +20V. This moves the frequency of the Crystal Oscillator from 100 MHz (F3 at 0V) to 99.33 Mhz (F3− at 0V) or 100.67 MHz (F3+ at 0V). Since the signal frequency from the Crystal Oscillator is multiplied by 3 in the Tripler before it is used as a local oscillator to drive the Third Converter Mixer, the local oscillator for the Third Converter Mixer is capable of being switched from 300 MHz (F3) to 298 MHz (F3−) or 302 MHz (F3+).

Bad crystals (or associated bias components) can be easily identified by unsoldering incoming control wires to F3−, F3, and F3+. If the oscillator will not oscillate with one of the control lines grounded but does oscillate with either of the other two grounded, then the crystal (or one of the associated bias components) is probably faulty. Try to restore oscillation by returning A3L4 and then tapping or moving components in the tank circuit.

Tripler (E) . The Tripler contains a 100 MHz linear, common-emitter amplifier A3Q1 which provides approximately 20 dB of gain. A3Q1 drives a Class C common-emitter amplifier/tripler A3Q3. Matching elements A3C4, A3C5, and A3L2 tune the collector of A3Q1 and the base of A3Q3 to 100 MHz. The collector of A3Q3 is tuned to 300 MHz by A3L3 and the following 300 MHz Bandpass Filter.

Note that with no or low RF signal driving the Frequency Tripler, dc voltages at TPF and A3TP3 will be incorrect, since with no input signal, A3Q3 is off, with no dc collector and emittr current.

Limiter (F) . The Limiter is a two-stage amplifier using emitter-coupled transistor pairs for each amplifier stage. Each stage limits the incoming 100 MHz signal by overdriving the base of the input transistor to a point where the grounded base output transistor switches from zero collector current, when the base of the input transistor is driven positive, to the full bias current, when the base of the input transistor is driven negative. Schottky-Barrier diodes A3CR4 and A3CR5 further limit the output of the first stage to prevent overdriving the second stage. Both amplifier stages are biased with constant emitter current for each pair by current source transistors A3U1B and A3U1E. All six transistors A3U1A through A3U1E are contained in a 10-pin integrated circuit which helps improve performance by reducing stray capacitance and lead length inductance.

Proper overall operation of the limiter can be checked by monitoring both the front-panel CAL OUTPUT and the 100 MHz test output J4 while detuning A3L4 OSC PEAK in the 100 MHz Crystal Oscillator. As A3L4 is detuned, the power at the 100 MHz test port J3 will decrease. I
front-panel CAL OUTPUT
for a 10 dB change in the 10

150 MHz Low-pass Filte
attenuates the harmonics
This filter is based on a fiv
design with a 3 dB cutoff
and the 150 MHz Low-Pas
cond and higher 100 MHz h
than 30 dB.

Regulator (B) . The Reg
follower used to furnish
Oscillator and to the Limite

300 MHz Bandpass Filte
is used to reject all 100 MH
the Frequency Tripler. Its
MHz Bandpass Filter.

A37 THIRD CONVERTER

Proper operation of the Th
verified by checking the co
MHz as called out by signal
sion gain is low but the 10
OUTPUT and 100 MHz
signal levels in the Thi
measured. To do this, the
or they will be mistuned. Th
ing the Third Converter A
Assembly is then tilted out
turned upside down (side
housing) and one side of i
Use the mesh gasket betwe
piece of tape over A3Q4
possibly shorting these par
cover and gasket in place o
complete, the inputs and
Third Converter Amplifie
Tripler, and the 100 MHz
The helical resonators will

The RF signal levels inside t
be checked with another
resistive divider probe such
available, a satisfactory s
female connector and a 4
8-16). The spectrum analy
tenuator set to 10 dB or gr
vide a good 50-ohm load fo

Scans by => ARTEK MEDIA © 2003-2005

tuning slugs C1 through C4. J5 provides a test port for filter alignment.

A37A2 Third Converter Mixer (H)

The Third Mixer converts the IF signal from the 321.4 Mhz Bandpass Filter to 21.4 MHz, using the signal from the 300 MHz Bandpass Filter as the local oscillator. The Third Converter Mixer is an unbalanced triply tuned mixer. The 321.4 MHz input signal is fed to mixer diodes A2CR1 and A2CR2. It is switched on and off to the 21.4 MHz output at a 300 MHz rate by the 300 MHz local oscillator signal. A2CR1 and A2CR2 are used in parallel to reduce resistance when the diodes are on. Output matching network A2L1 through A2L3 and A2C2 transforms the impedance seen at the cathodes of A2CR1 and A2CR2 to approximately 50Ω. It also provides an open circuit for the 321.4 MHz IF signal and 300 MHz local oscillator signal.

The mixer is triply tuned in the sense that power from any one of the three signals present in the mixer (321.4 MHz, 300 MHz, and 21.4 MHz) cannot be lost in a port that is used for the other two signals. For example 321.4 MHz power cannot be directly lost out the 21.4 MHz port, because L2 is essentially an open circuit at 321.4 MHz; nor can it be lost out the 300 MHz LO port, because the 300 MHz Bandpass Filter is reflective at 321.4 MHz.

A37A3 Third Converter Oscillator

The Third Converter Oscillator contains a 100 MHz Crystal Oscillator. This oscillator drives a Frequency Tripler, which amplifies and triples the 100 MHz signal to provide a high level 300 MHz signal to drive the Third Converter Mixer. It also contains a Limiter, which provides an amplitude-stable, temperature-compensated −10 dBm signal. This signal is filtered by the 150 MHz Low-pass Filter to remove harmonics produced in the Limiter. A Regulator provides dc bias voltages to the 100 MHz crystal oscillator and limiter.

100 MHz Crystal Oscillator (D) . The 100 MHz Crystal Oscillator is a grounded-base Colpitts oscillator which uses a series resonant, fifth overtone crystal in the collector to emitter feedback path to achieve frequency stability and low noise. A3Q2 provides unity current gain from the emitter to the collector. The current at the collector is transformed up by tank circuit A3L4, A3C12, and A3C13 and then fed back to the emitter through series resonant crystal A3Y1, A3Y2, or A3Y3 and associated PIN switching diode A3CR1, A3CR2, or A3CR3. The tank circuit A3L4, A3C12, and A3C13 is a frequency-selective transformer which also prevents the oscillator from oscillating at other overtones of the crystal. Output power is tapped out of the tank through A3C14 to resistive network A3R20, A3R21, A3R19, and A3R22, which distributes the output power and provides a constant load to the oscillator. The 100 MHz Crystal Oscillator is capable of oscillating at the series resonance of either of the three crystals A3Y1, A3Y2, or A3Y3. In normal operation, control line F3 is pulled down to approximately 0V, turning on PIN diode A3CR2 to provide an RF feedback path through A3Y2. Control lines F3− and F3+ are open, and pull-up resistors A3R13 and A3R15 back bias A3CR1 and A3CR3, keeping them off to open the RF feedback paths through A3Y1 and A3Y3. During Signal Identifier operation (available on 1 MHz/DIV span only), control line F3 is switched between 0V and +20V on alternate sweeps, with either F3− or F3+ (depending on which frequency band is selected) being switched to 0V when F3 is switched to +20V. This moves the frequency of the Crystal Oscillator from 100 MHz (F3 at 0V) to 99.33 Mhz (F3− at 0V) or 100.67 MHz (F3+ at 0V). Since the signal frequency from the Crystal Oscillator is multiplied by 3 in the Tripler before it is used as a local oscillator to drive the Third Converter Mixer, the local oscillator for the Third Converter Mixer is capable of being switched from 300 MHz (F3) to 298 MHz (F3−) or 302 MHz (F3+).

Bad crystals (or associated bias components) can be easily identified by unsoldering incoming control wires to F3−, F3, and F3+. If the oscillator will not oscillate with one of the control lines grounded but does oscillate with either of the other two grounded, then the crystal (or one of the associated bias components) is probably faulty. Try to restore oscillation by returning A3L4 and then tapping or moving components in the tank circuit.

Tripler (E) . The Tripler contains a 100 MHz linear, common-emitter amplifier A3Q1 which provides approximately 20 dB of gain. A3Q1 drives a Class C common-emitter amplifier/tripler A3Q3. Matching elements A3C4, A3C5, and A3L2 tune the collector of A3Q1 and the base of A3Q3 to 100 MHz. The collector of A3Q3 is tuned to 300 MHz by A3L3 and the following 300 MHz Bandpass Filter.

Note that with no or low RF signal driving the Frequency Tripler, dc voltages at TPF and A3TP3 will be incorrect, since with no input signal, A3Q3 is off, with no dc collector and emittr current.

Limiter (F) . The Limiter is a two-stage amplifier using emitter-coupled transistor pairs for each amplifier stage. Each stage limits the incoming 100 MHz signal by overdriving the base of the input transistor to a point where the grounded base output transistor switches from zero collector current, when the base of the input transistor is driven positive, to the full bias current, when the base of the input transistor is driven negative. Schottky-Barrier diodes A3CR4 and A3CR5 further limit the output of the first stage to prevent overdriving the second stage. Both amplifier stages are biased with constant emitter current for each pair by current source transistors A3U1B and A3U1E. All six transistors A3U1A through A3U1E are contained in a 10-pin integrated circuit which helps improve performance by reducing stray capacitance and lead length inductance.

Proper overall operation of the limiter can be checked by monitoring both the front-panel CAL OUTPUT and the 100 MHz test output J4 while detuning A3L4 OSC PEAK in the 100 MHz Crystal Oscillator. As A3L4 is detuned, the power at the 100 MHz test port J3 will decrease. If the Limiter is operating properly, the front-panel CAL OUTPUT level should change less than 0.1 dB for a 10 dB change in the 100 MHz test output.

150 MHz Low-pass Filter (I) . The 150 MHz Low-pass Filter attenuates the harmonics present at the output of the Limiter. This filter is based on a five-element, 0.01 dB ripple, Chebyshev design with a 3 dB cutoff frequency of 150 MHz. If the Limiter and the 150 MHz Low-Pass Filter are operating properly, the second and higher 100 MHz harmonics will be attenuated by greater than 30 dB.

Regulator (B) . The Regulator is a resistive divider and emitter follower used to furnish dc bias voltages to the 100 MHz Oscillator and to the Limiter.

300 MHz Bandpass Filter (G) . The 300 MHz Bandpass Filter is used to reject all 100 MHz harmonics but the third produced in the Frequency Tripler. Its operation is the same as for the 321.4 MHz Bandpass Filter.

A37 THIRD CONVERTER ASSEMBLY TROUBLESHOOTING

Proper operation of the Third Converter Assembly can usually be verified by checking the conversion gain from 321.4 MHz to 21.4 MHz as called out by signal levels on the schematic. If the conversion gain is low but the 100 MHz signals at the front panel CAL OUTPUT and 100 MHz test port J3 are correct, the internal signal levels in the Third Converter Assembly should be measured. To do this, the helical resonators must remain covered or they will be mistuned. This can be accomplished by first removing the Third Converter Assembly cover. The Third Converter Assembly is then tilted out from the instrument. The cover is then turned upside down (side with silkscreen markings against the housing) and one side of it used to cover the helical resonators. Use the mesh gasket between the cover and housing and place a piece of tape over A3Q4 and A3U1 to keep the gasket from possibly shorting these parts. Replace the 14 screws holding the cover and gasket in place over the helical resonators. When this is complete, the inputs and outputs of the helical resonators, the Third Converter Amplifier, the Third Converter Mixer, the Tripler, and the 100 MHz Crystal Oscillator will all be exposed. The helical resonators will not require readjustment.

The RF signal levels inside the Third Converter Assembly can now be checked with another spectrum analyzer and a 500Ω 10:1 resistive divider probe such as the 10020A. If such a probe is not available, a satisfactory substitute can be made from a BNC female connector and a 464-ohm, 1/8-watt resistor (see Figure 8-16). The spectrum analyzer should be used with the input attenuator set to 10 dB or greater for input protection and to provide a good 50-ohm load for the divider.

Scans by => ARTEK MEDIA © 2003-2005

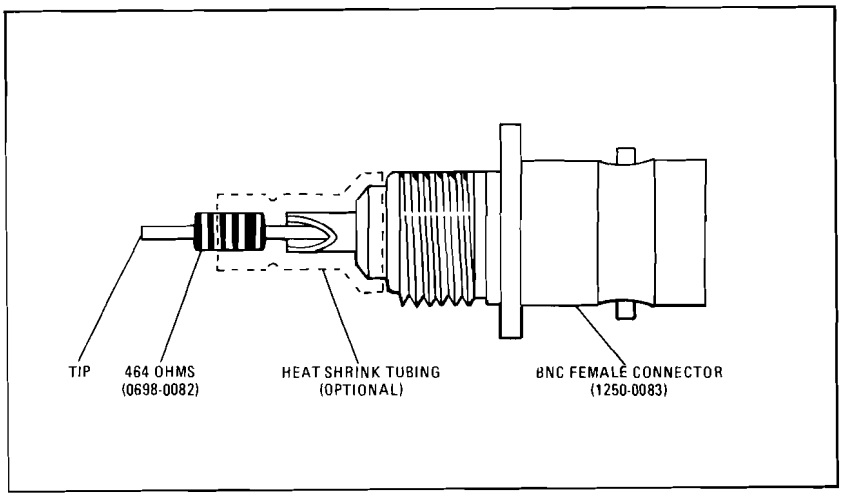

Figure 8-16. Substitute Divider Probe

The signal levels called out in the schematic can be traced with the probe and should read within ±2 dB of indicated levels. Care must be taken to identify the proper signal frequencies on the spectrum analyzer display. Signal level readings at TPA, TPB, TPC, TPF, TPH, J1, and J2 must be taken with the case of the probe grounded directly to a convenient point on the Third Converer Assembly housing or cover. Measurements at other test points can be made with the probe case ungrounded.

Note that a 321.4 MHz, −30 dBm signal from an external signal source can be applied to J1 in place of the internal signal from K5J1. This may be necessary if the signal peak cannot be found when tuning the 8565A.

If the conversion gain is low and the 100 MHz signal at test port J3 is low or nonexistent, or the front-panel CAL OUTPUT signal is low or nonexistent, then the Third Converter Oscillator should be troubleshot. This can be done by removing the cover and leaving the Third Converter Asembly housing in place. Note that the helical resonators will be uncovered and therefore mistuned, so RF signal levels at TPA, TPB, TPC, TPF, TPH, J1, and J2 will be incorrect. However, removal of the cover will allow access to the components of the Limiter.

Scans by ARTEK MEDIA =>

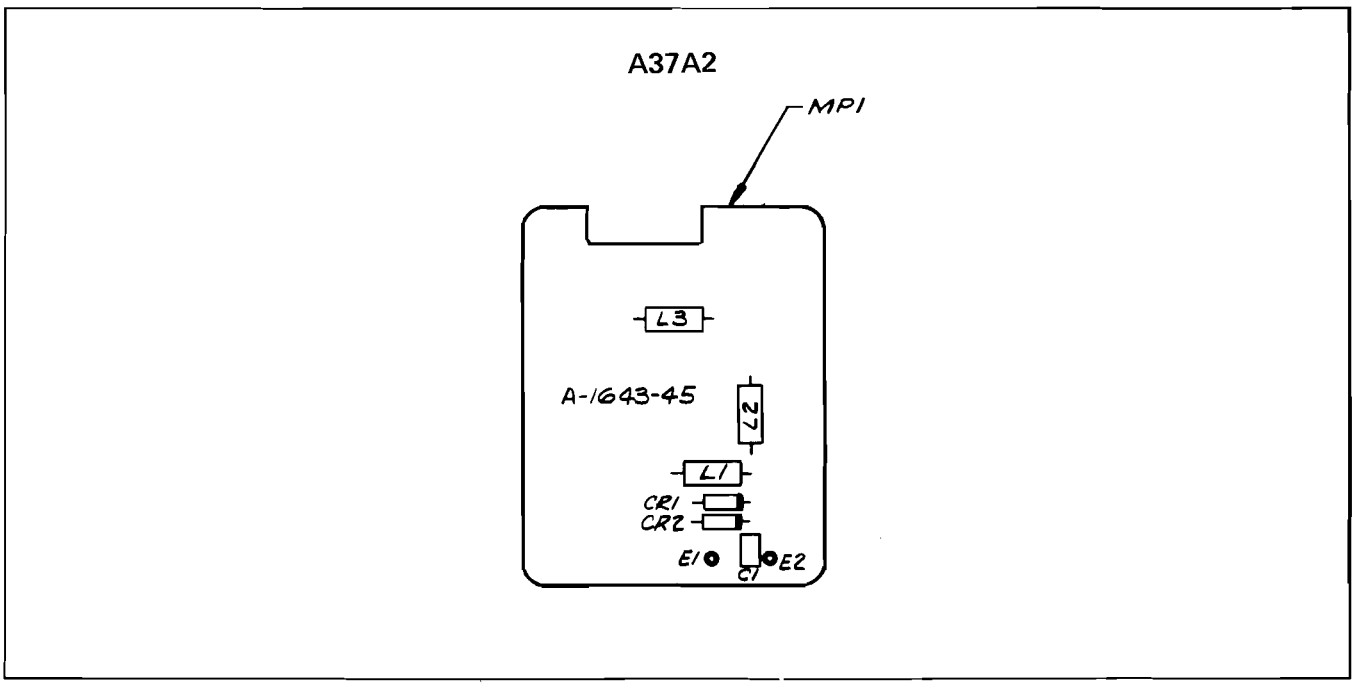

Figure 8-17. A37A2 Third Converter Mixer, Component Locations

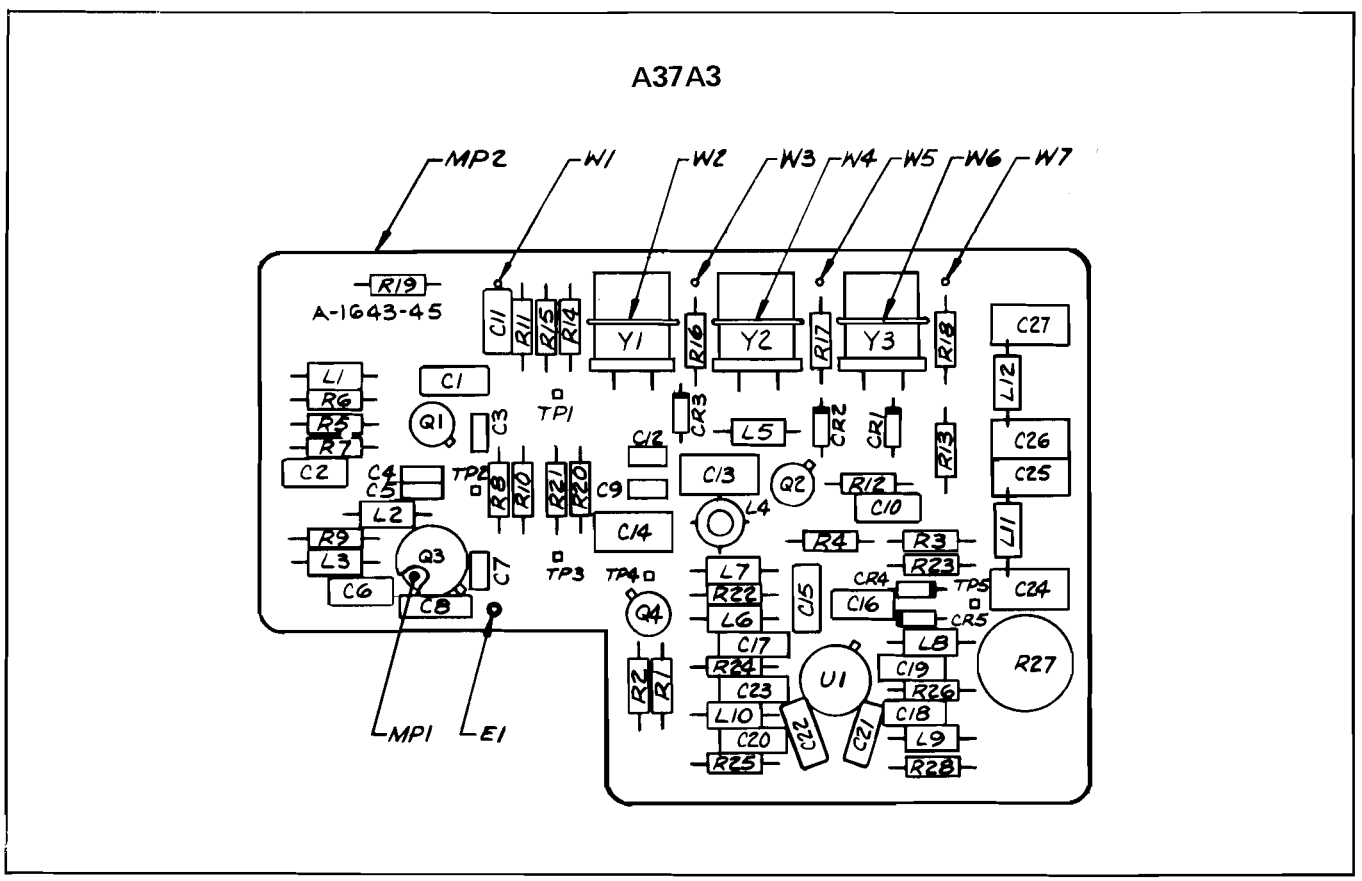

Figure 8-18. A37A3 Third Converter Oscillator, Component Locations

Scans by ARTEK MEDIA =>

Scans by => ARTEK MEDIA © 2003-2005

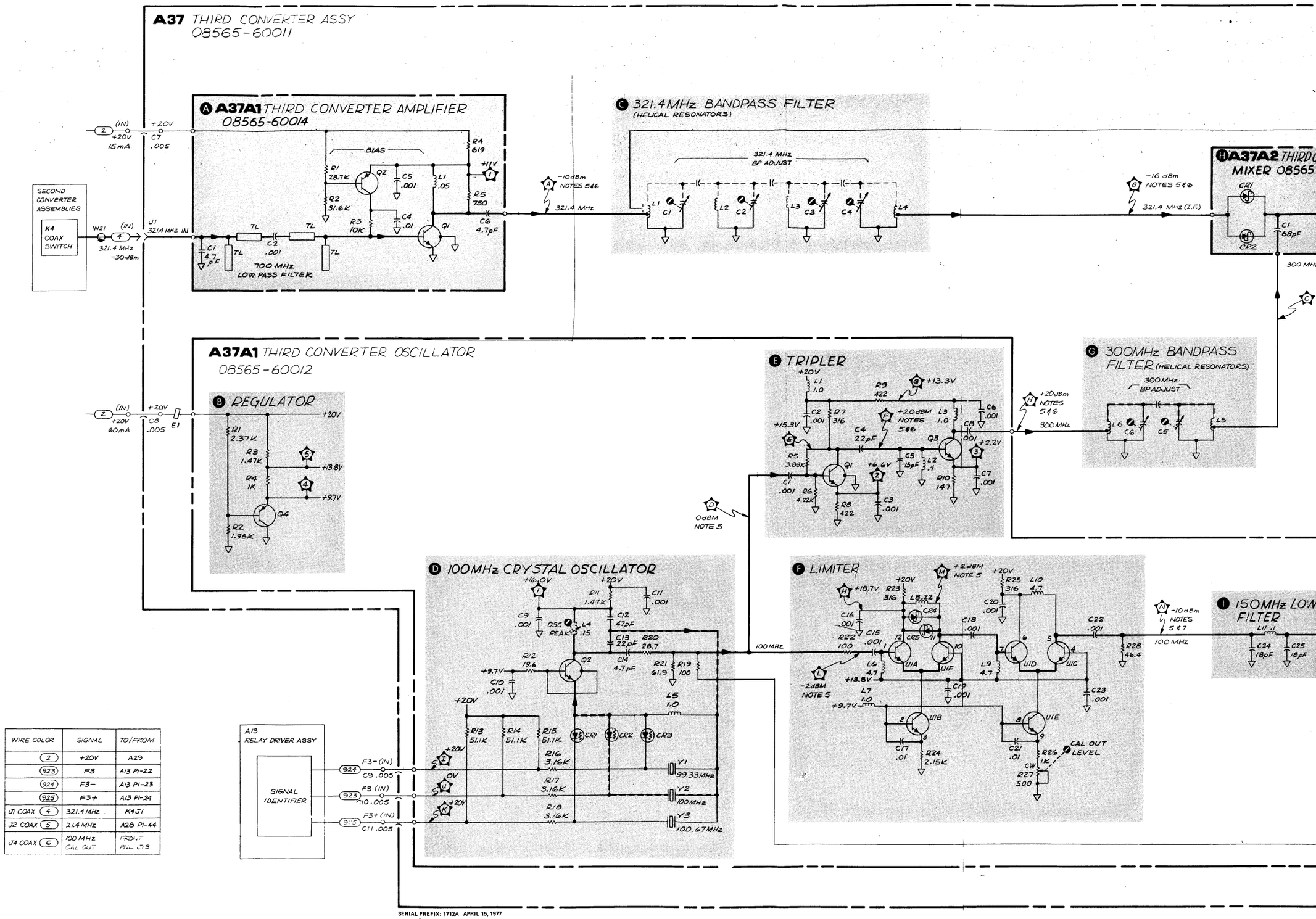

WIRE COLOR	SIGNAL	TO/FROM
2	+20V	A29
923	F3	A13 P1-22
924	F3−	A13 P1-23
925	F3+	A13 P1-24
J1 COAX 4	321.4 MHz	K4J1
J2 COAX 5	21.4 MHz	A28 P1-44
J4 COAX 6	100 MHz CAL OUT	FRONT PANEL J3

SERIAL PREFIX: 1712A APRIL 15, 1977

Scans by => ARTEK MEDIA © 2003-2005

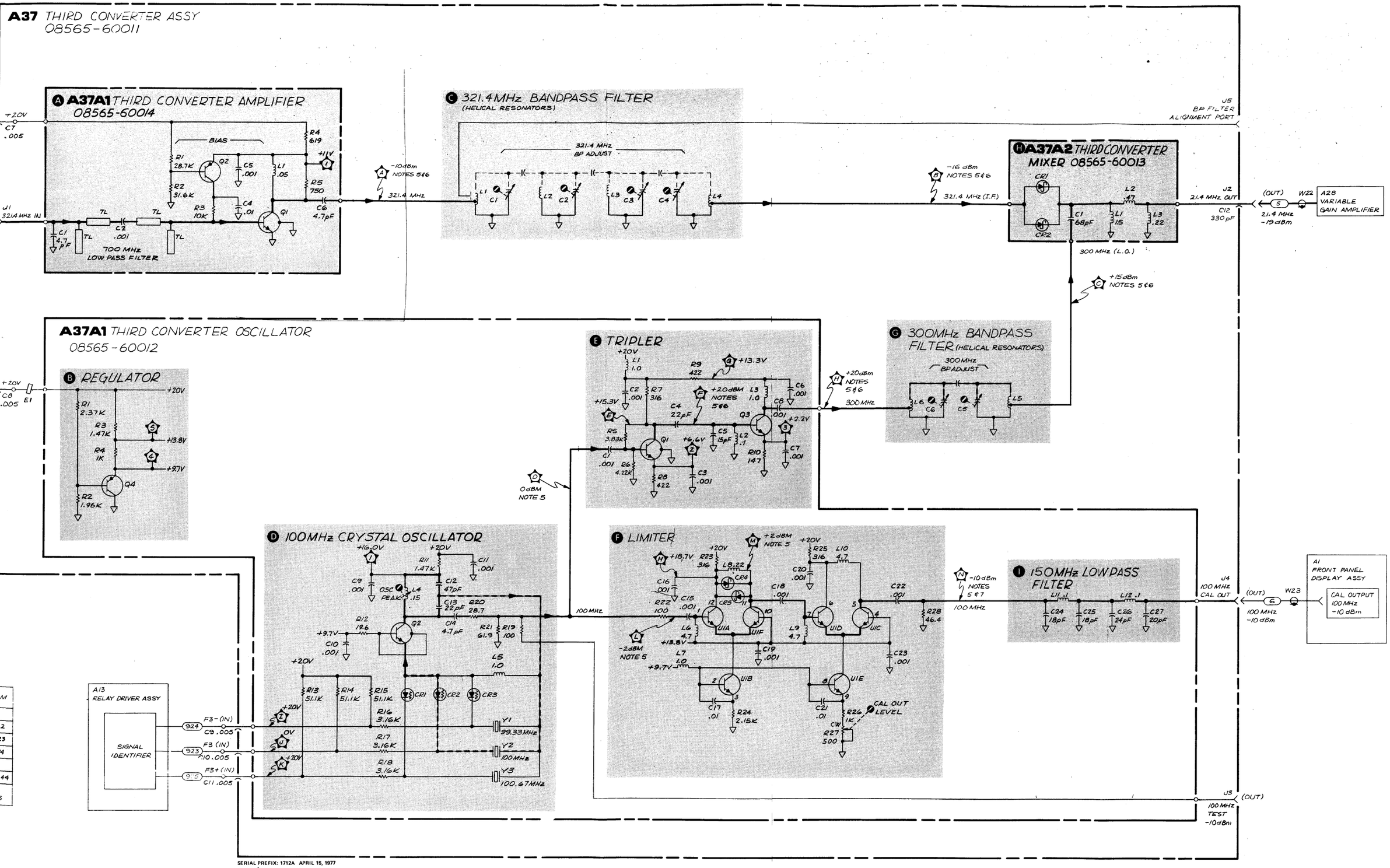

Figure 8-19. A37 Third Converter

SERVICE SHEET 9
A13 RELAY DRIVER ASSEMBLY, CIRCUIT DESCRIPTION

The Relay Driver Assembly can be divided into two major circuits: the Signal Identifier and the Relay Driver.

The Signal Identifier provides a means to identify a displayed signal by controlling the frequency of the local oscillator in the Third Converter Assembly.

The Relay Driver decodes the front-panel switch positions to control relays in the RF section of the spectrum analyzer, routing RF signals to the proper assemblies.

Signal Identifier

The Signal Identifier shifts the displayed signal 2 cm to the left on alternate sweeps (except for the 100 MHz CAL signal) when the front-panel SIG IDENT button is pressed and FREQ SPAN/DIV is set to 1 MHz. The flip-flop U1 is enabled by a high preset signal at pin 4 and is toggled on alternate sweeps by the RETRACE BLANK input. The output of U1 selects a crystal offset in the Third Converter Assembly. The crystal for the correct offset is selected by the frequency band inputs B5, B6, and B7 (see Note 3 on the schematic). The F3 + line is enabled and is switched in when B5, B6, or B7 turns on Q6 and U1 toggles. A low at Q6 collector pulls the base of Q1 down, disabling the U1 input to Q1. At the same time, Q6 low drives Q5 high, enabling the U1 input to Q2, which in turn drives the F3 + line.

When B5, B6, or B7 is not selected, Q6 collector is high, enabling Q1 and shorting Q2 base to ground through Q5. Q6 then drives the F3– line.

When the Signal Identifier is not enabled by the front-panel switches, the Q output of U1 is driven high by a low at the present input. This high output drives Q4 low, driving the F3 line.

Relay Driver B

The Relay Driver accepts signals from the front-panel frequency band controls and selects either the EXT MIXER RELAY, the IF RELAY or the RF RELAY. When B1 is selected, both Q9 and Q10 are turned on, switching in the IF RELAY and the RF RELAY. When either B7 or B8 is selected, Q8 and Q9 are turned on, turning on both the EXT MIXER RELAY and the IF RELAY.

Scans by ARTEK MEDIA =>

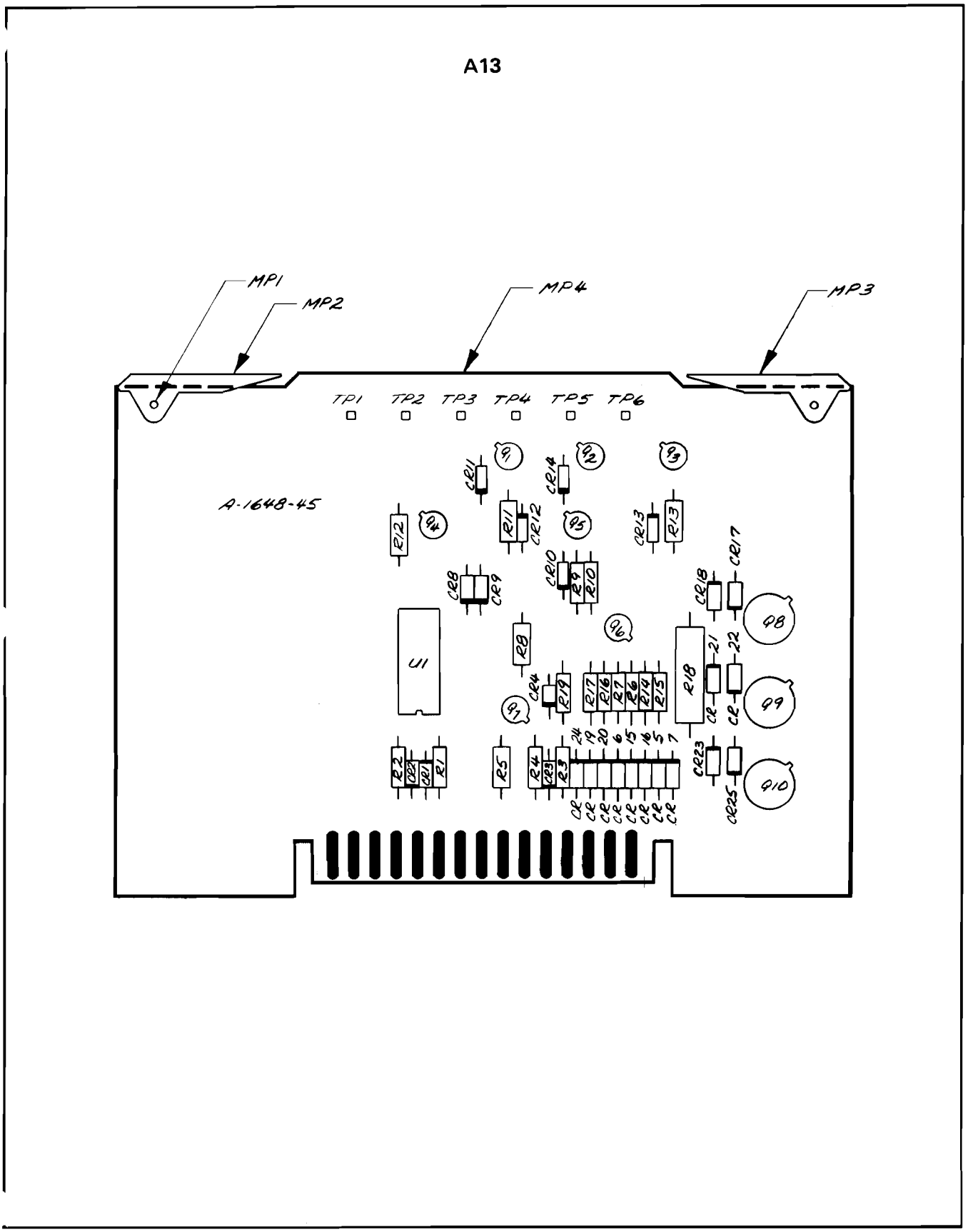

Figure 8-20. A13 Relay Driver Assembly, Component Locations

Scans by ARTEK MEDIA =>

Scans by => ARTEK MEDIA © 2003-2005

A13 RELAY DRIVER ASSEMBLY
08565-60017

P1

PIN	SIGNAL	TO/FROM	FUNCTION BLOCK
1	+26V RETURN		B
16	+26V RETURN		B
2	-15V		C
17	-15V		C
3	+15V		C
18	+15V		C
4	+26V UNREG		C
19	+26V UNREG		C
5	▽		C
20	▽		C
6	+5.2V		C
21	+5.2V		C
7	IF RELAY	A35 (4)	B
22	F3	A37 (823)	A
8	EXT. MIXER RELAY	A35 (8)	B
23	F3-	A37 (824)	A
9	RF RELAY	A30 (5)	B
24	F3+	A37 (825)	A
10	N.C.		
25	SIG IDENT AMPL	A28J1-32	A
11	1 MHz/DIV	A2A1 J2-31	A
26	RETRACE BLANK	A16J2-33	A
12	B1	A2A1 J1-17	B
27	NC		
13	B5	A2A1 J1-3	A
28	NC		
14	B7	A2A1 J1-4	B
29	NC		
15	B8	A2A1 J1-6	B
30	B6	A2A1 J1-2	A

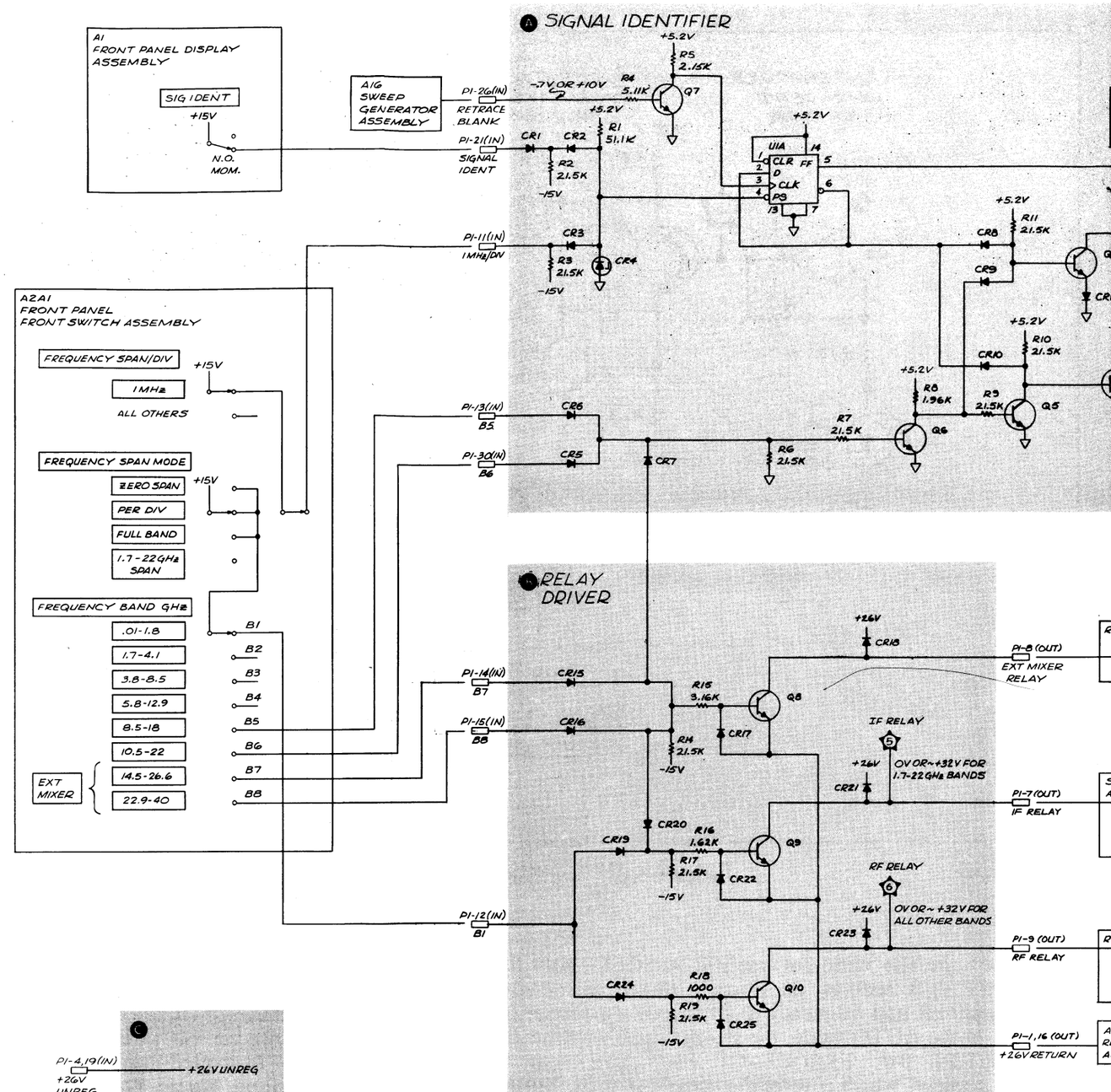

Scans by => ARTEK MEDIA © 2003-2005

RELAY DRIVER ASSEMBLY
08565-60017

TO/FROM	FUNCTION BLOCK
	B
	B
	C
	C
	C
	C
	C
	C
	C
	C
A35 (4)	B
A37 (B23)	A
A35 (8)	B
A37 (B24)	A
A30 (5)	B
A37 (B25)	A
A28J1-32	A
A2A1 J2-31	A
A16J2-33	A
A2A1 J1-17	B
A2A1 J1-3	A
A2A1 J1-4	B
A2A1 J1-6	B
A2A1 J1-2	A

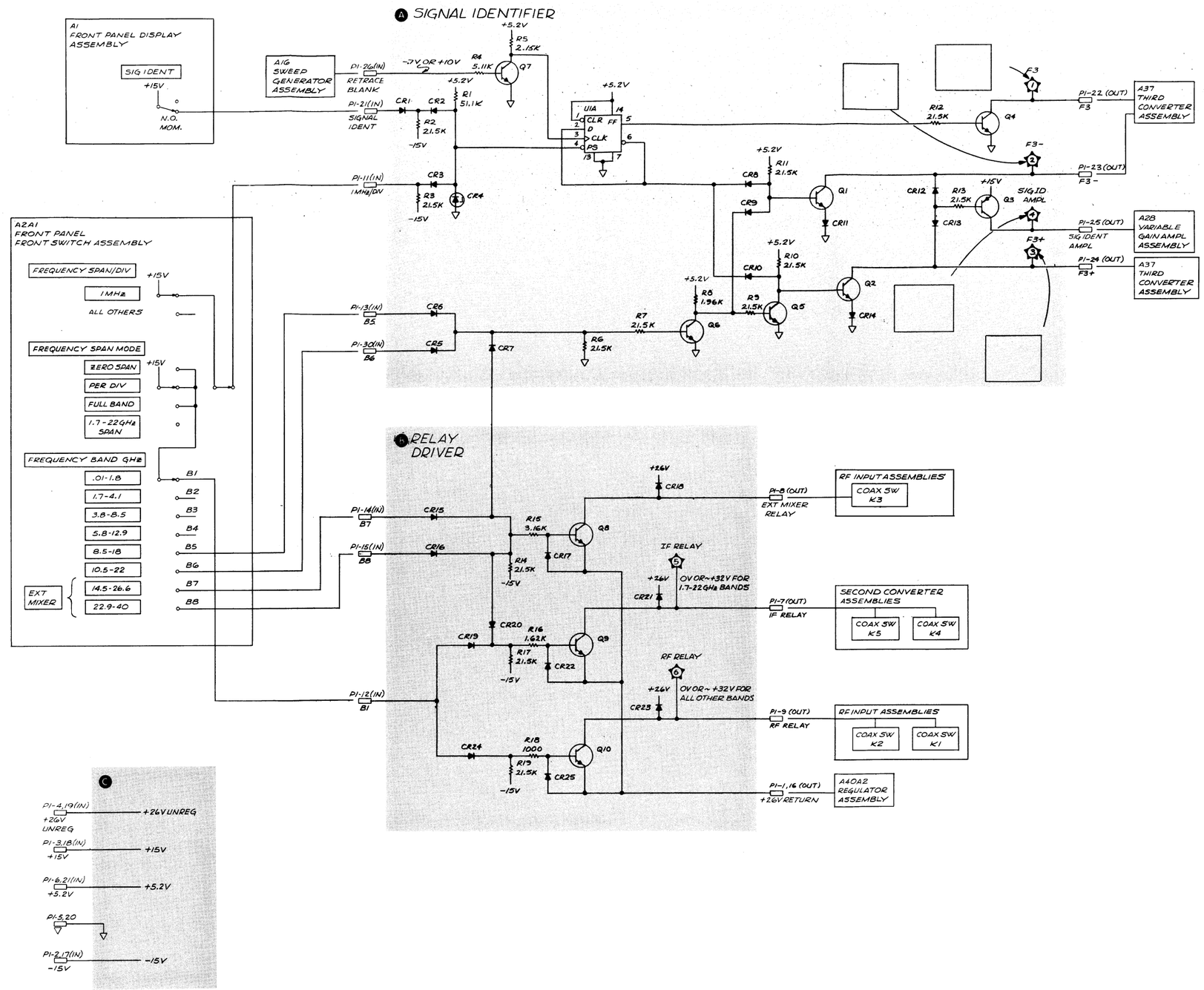

NOTES

1. REFERENCE DESIGNATORS ARE ABBREVIATED. FOR COMPLETE DESIGNATOR PREFIX WITH ASSEMBLY REFERENCE DESIGNATOR.
2. UNLESS OTHERWISE INDICATED: RESISTANCE IN OHMS (Ω) CAPACITANCE IN MICROFARADS (μF)
3. SIGNAL LEVELS AND TESTPOINT WAVEFORMS ASSUME THE FOLLOWING SETTINGS: GREEN (NORMAL) SETTINGS FREQUENCY BAND: .01-1.8 GHz FREQUENCY SPAN/DIV: 1 MHz SIG IDENT: ON
4. REFERENCE DESIGNATORS

A13	
LAST USED	NOT USED
CR25 R19 Q10	

9
A13

2A APRIL 15, 1977

Figure 8-21. A13 Relay Driver Assembly, Schematic Diagram

SERVICE SHEET 10
A16 SWEEP GENERATOR ASSEMBLY, CIRCUIT DESCRIPTION

The Sweep Generator Assembly contains circuits which trigger and generate a −15V to +5V linear ramp that horizontally sweeps the CRT display. The sweep voltage is also processed in the Sweep Attenuator Assembly to sweep the analyzer frequency. The Sweep Generator circuit supplies the RETRACE BLANK signal to the Z Axis Ampifier Assembly and drives the front panel SWEEP indicator LED.

Calibrated SWEEP TIME/DIV can be varied from 2 μSEC/DIV to 10 SEC/DIV in a 1, 2, 5 sequence. In AUTO mode, sweep time is optimized for particular RESOLUTION BW, FREQUENCY SPAN/DIV, and VIDEO FILTER settings.

A current source in the Sweep Generator Assembly charges a timing capacitor with a constant current to generate the linear ramp voltage which is applied to a buffer amplifier, providing the low impedance INT SWP output.

A sweep comparator controls the sweep start and stop voltages and discharges the timing capacitor at the end of the sweep. Manual sweep circuitry in the sweep generator controls the dc output voltage of the INT SWP signal according to the position of the MANUAL SWEEP control on the front panel.

In frequency spans greater than 50 MHz/DIV in AUTO mode, a current-limiting circuit in the Sweep Generator Assembly prevents the analyzer from sweeping frequency faster than approximately 20 MHz per msec. Logic circuitry in the Sweep Generator Assembly determines which of six different values of current limiting to apply to the Sweep Generator Current Source, depending on analyzer frequency span.

In INT, EXT, and LINE settings of SWEEP TRIGGER, a trigger comparator in the Sweep Generator Assembly starts a sweep when the trigger signal exceeds the trigger level.

The External Sweep Input Buffer circuit converts a 0V to +10V SWEEP SIGNAL applied to the rear-panel EXT SWEEP INPUT to a −5V to +5V SWEEP voltage which goes to the front-panel SWEEP SOURCE switch. The 1/N Sweep Attenuator provides to the Sweep Attenuator Assembly a sweep signal of −5V to +5V divided by the harmonic mixing number of the selected frequency band.

Current Source (A)

Current for the generation of the sweep is provided by a Current Source as shown in the simplified circuit in Figure 8-22. In the Temperature Dependent Power Supply, U2A provides a nominal +10V; diode Q4 is the temperature sensing element.

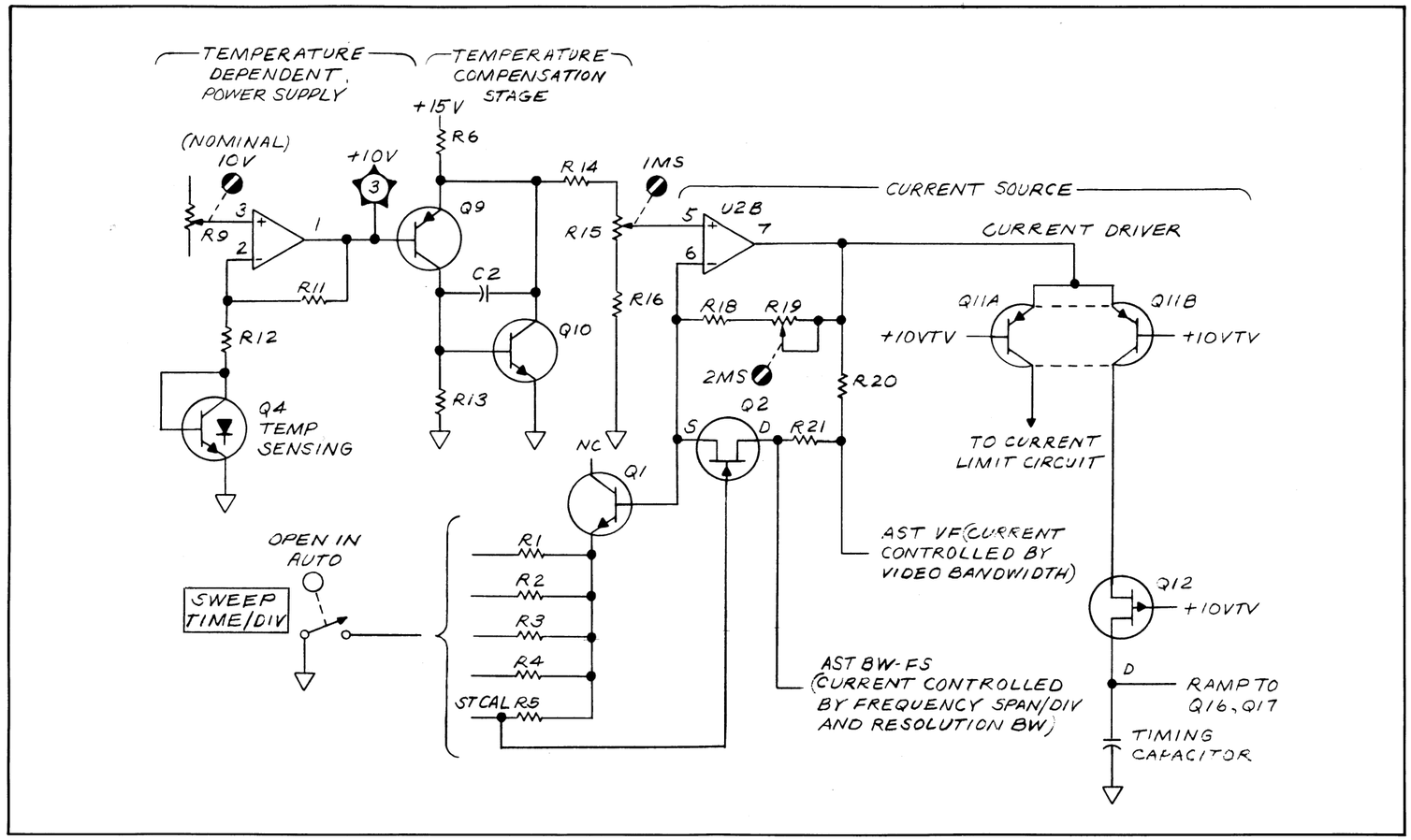

Figure 8-22. Simplified Circuit for Sweep Generator Current Source

Because of the rise times for specific RESOLUTION BW and VIDEO FILTER settings, an error is caused in the displayed signal amplitude and frequency if the spectrum analyzer is swept too fast. In the AUTO mode, the sweep time is controlled by the RESOLUTION BW, FREQUENCY SPAN/DIV, and VIDEO FILTER settings, which control the current to U2B. This current in turn controls Current Source current. Current to U2B is set by resistors on the AST BW-FS line that are connected by transistor switches to ground in various combinations, depending on RESOLUTION BW and FREQUENCY SPAN/DIV settings. Resistors connected to the AST-VF line control current to U2B that depends on the front-panel VIDEO FILTER setting. Resistors and transistor switches on the AST BW-FS and AST-VF lines are located in the Video, Sweep Attenuator, and Full Multiband Assemblies. The resistors are sized so that AUTO sweep time is proportional to frequency span width and inversely proportional to the square of the resolution bandwidth (or video bandwidth, if video filtering is used).

In either calibrated or AUTO sweep time, the currents set at U2B are summed to produce a voltage proportional to the log of the sweep rate. Q11B, the equal current driver, converts voltage variations into current variations proportional to the sweep rate. The current is applied through Q12 to the timing capacitors C12 and C13 in the Sweep Generator circuit. Q11A applies a current (proportinal to Q11B collector current) to the Auto Sweep Time Current Limit circuit.

Q9 provides temperature compensation for Q11. Q10 is a constant current regulator for Q9.

In the calibrated SWEEP TIME/DIV mode, the gate of Q2 is grounded. This turns Q2 off and disconnects the currents proportional to RESOLUTION BW, FREQUENCY SPAN/DIV, and VIDEO FILTER. Calibrated sweep times are now controlled by the current to U2B through resistors R1 through R5, which are grounded in various combinations by the front-panel SWEEP

Scans by => ARTEK MEDIA © 2003-2005

TIME/DIV switch. Q12 is normally kept on by R22 to the +10VTV supply and buffers Q11B from C12 and C13. In 1.7 – 22 GHz SPAN mode, the STOP SWP line from the Full Multiband Assembly pulls Q12 gate to +25V, turning Q12 off. This causes the sweep voltage to be held at a constant level as long as STOP SWP is high. STOP SWP signals occur at band crossings to prevent spurious signals from appearing on the display. The STOP SWP line is held high for approximately 15 ms at each band crossing.

Sweep Generator D

Referring to Figure 8-23, the operation for generating a ramp voltage in AUTO sweep is as follows. The ramp begins when the dead-time capacitor C15 charges to about +1.2V through R81. This turns Q13 on, and U3 pin 2 is driven negative. The output of sweep comparator op amp U3 rises to approximately +14V and reset-diode CR3 is back-biased. With CR3 off, the constant current source begins charging timing capacitor C13 positive. The Q13 collector remains low throughout the sweep. As C13 charges, the voltage at U3 pin 2 increases until it reaches +2.71V. At this time, the voltage at the output of U3 begins to decrease. When the output of U3 decreases to approximately +12V, VR1 and CR5 stop conducting, turning off Q13. As Q13 turns off, the voltage at U3 pin 2 increases, causing U3 pin 6 to go negative, discharging C13 through CR3. The change in U7 output of about −15V is coupled to the anode of CR7. With CR7 back biased, Q13 remains off. U3 continues to discharge until the voltage divider at pin 2, set by the voltage divider R59, R65, and R66, reaches +2.71V. At this point (the beginning of the sweep dead time) the ramp is at −5V. The ramp remains at −5V until the dead-time capacitor C15 charges through R81 to +1.2V, turning on Q13 and repeating the sweep cycle.

Other components in the Sweep Generator have the following functions. C7 is a speed-up capacitor for U3 switching. C9 is a speed-up capacitor for Q13 turn-off at the end of the sweep. CR6, R69, and R70 prevent C9 from affecting Q13 except at the end of the sweep.

C8 and R62 desensitize U3 from spikes on the +15V supply. C4 and C5 provide frequency compensation for U1 and C6 feedback compensation. VR1, CR4, and R67 are used to bring U3 out of saturation at the end of the ramp to improve switching speed.

Single Sweep Control. Q13 is initially held off by R83 and CR10. Q14 is on (TPA at approximately +9V), and voltage divider R72 and R73 charges C17 to +2.8V. When the SWEEP TRIGGER switch is in SINGLE position, and the momentary START/RESET pushbutton is pressed, +15V is applied to R78, turning on Q8. This shorts the positive end of C17 to ground and produces a negative pulse at the emitter of Q13. This turns Q13 on, starting a sweep.

During the generation of a sweep, Q14 emitter is at −0.6V, and the voltage divider R72 and R73 charges C17 to −4V. The sweep may be aborted (reset to −5V) by pressing the START/RESET pushbutton. This turns on Q8. The negative end of C17 is shorted to ground, a positive pulse is generated at the emitter of Q13, and Q13 is turned off, aborting the sweep. The START/RESET pushbutton will abort any sweep regardless of the SWEEP TRIGGER setting.

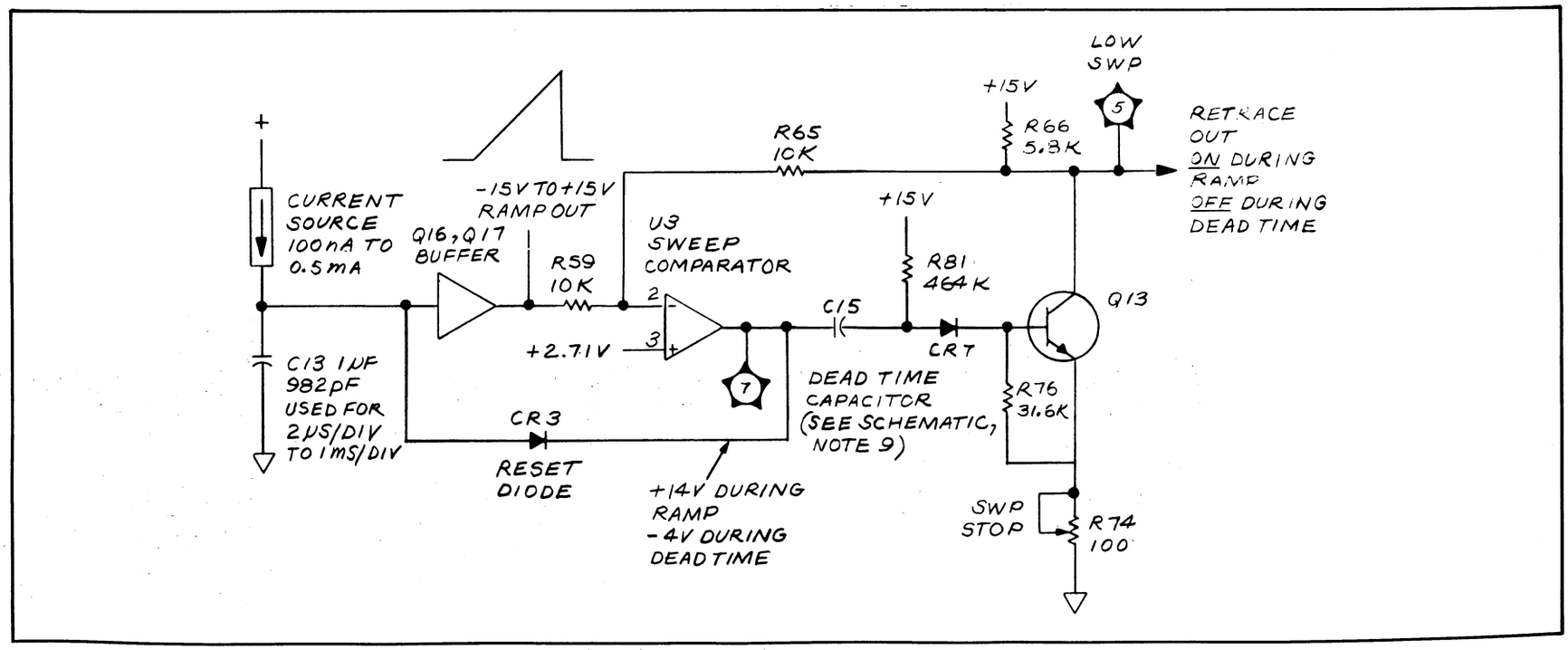

Figure 8-23. Simplified Sweep Generator in FREE RUN or AUTO

Scans by => ARTEK MEDIA © 2003-2005

Fast/Slow Sweep Time Operation. Timing capacitors C12 and C13 are used to provide fast and slow sweep operation. When a fast sweep time (≤1 ms SEC/DIV) is selected by the SWEEP TIME/DIV switch, the FAST SWEEP control line is grounded, turning off Q18 and Q15. With Q15 off, C12 and C13 are in series and C12 is the timing capacitor. With Q18 off, the +15V at R88 will back bias CR11 and CR9, so C15 is switched out of the dead-time circuit. C11 is switched out of the dead time circuit by CR8, R84, and Q21 for all frequency span modes except FULL BAND and 1.7 – 22 GHz SPAN. The short dead time (about 0.4 ms) is set by C10. For sweep times >1 mSEC/DIV (or in AUTO sweep times), the ST FAST control line is open, and Q18 and Q15 are both on. With Q15 on, a ground is provided for C13, and it becomes the timing capacitor. If the same amount of charging current is supplied to a larger capacitor, it will charge at a slower rate. CR11 and CR9 are on because of the conduction of Q18. C10 and C15 are in parallel, so the longer dead time (about 22 ms) is set by C15.

In FULL BAND or 1.7 – 22 GHz SPAN modes, Q21 is turned on by CR25 (FULL BAND) or CR26 (1.7 – 22 GHz SPAN). This forward biases CR8, placing C11 in parallel with C10 and C15. This sets the dead time at about 80 ms.

FREE RUN Operation. When selecting FREE RUN or triggered modes, the state of Q13 is controlled by CR10 and R82. In FREE RUN mode, +15V is applied through the SWEEP TRIGGER switch to the voltage divider R82 and R83. The voltage at the cathode of CR10 is approximately +1.5V and CR10 does not conduct. The Sweep Generator circuit free runs and Q13 turns on following the previous sweep and after the dead time, which is determined by the RC time constants.

Manual Sweep Control C

Manual control of the sweep is obtained with the SWEEP SOURCE switch in MAN (see Figure 8-24). In INT, Q19 and Q20 are turned off because Q20 base is pulled to ground through R97 and Q19 is held off by R99. In MAN mode, Q19 and Q20 are turned on through R100. Q19 turns Q13 on and keeps it on. U3 holds CR3 on, and the feedback loop to the timing capacitor is closed. Turning the MANUAL SWEEP control changes the input current through Q20 to U3 pin 2. Since the output current through R65 is constant, any change in MANUAL SWEEP current must be compensated for by a change in the current through R59, thereby varying the ramp output voltage.

Sweep Trigger E

The Sweep Trigger circuit generates the signal that is applied to the Sweep Generator to start a sweep in INT, EXT, or LINE trigger modes. The front-panel SWEEP TRIGGER switch selects between the video signal (INT), the external trigger signal from the rear panel (EXT), and an ac voltage at the line frequency (LINE). The ac line voltage is attenuated to a 0V to 3V peak-to-peak signal, and the external trigger is attenuated and filtered on the RF-IF Mother Board before being routed to the front-panel

Scans by ARTEK MEDIA =>

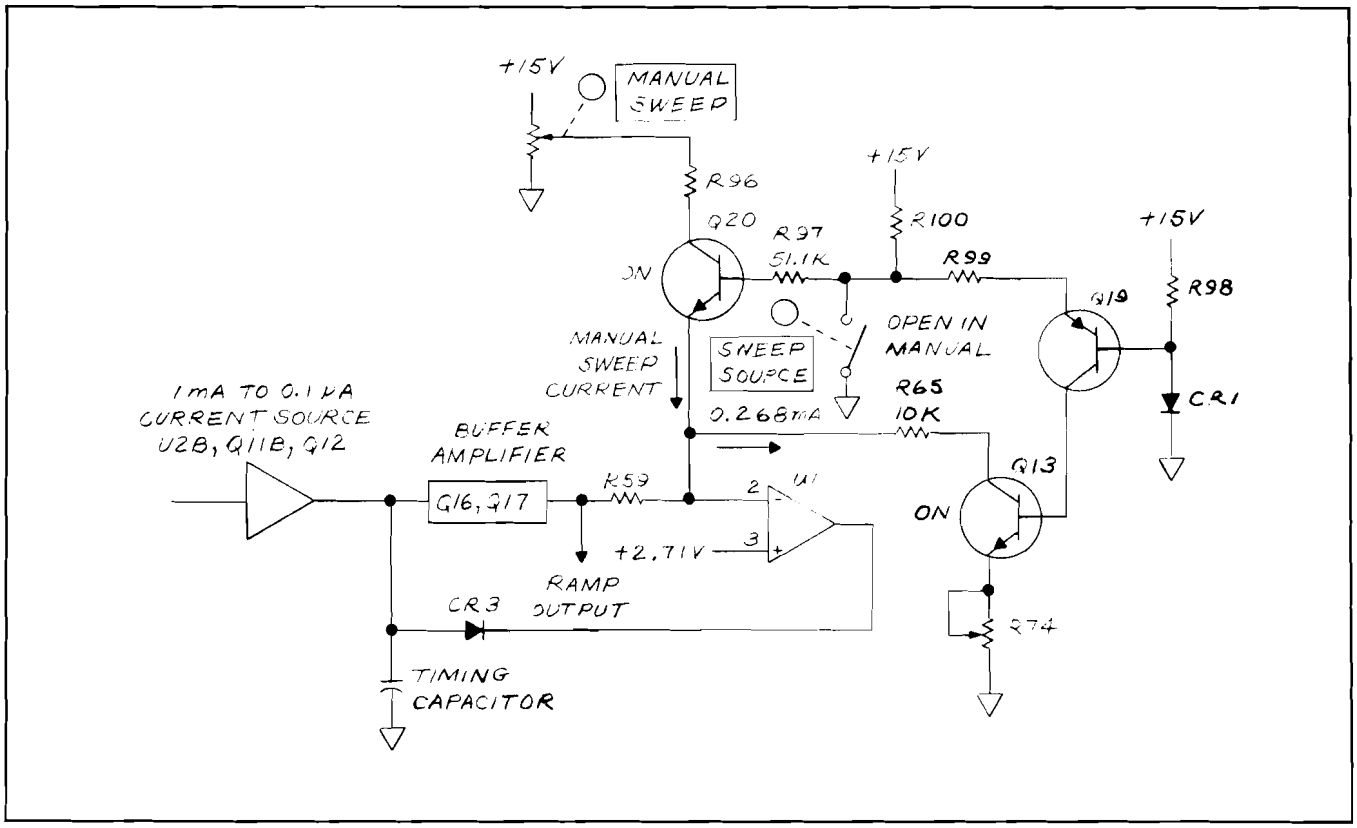

Figure 8-24. Manual Sweep Simplified Schematic

SWEEP TRIGGER switch. The selected trigger signal is applied to the inverting input fo comparator U4. A 0V to 0.8V reference voltage proportional to the front panel TRIGGER LEVEL setting is applied to the noninverting input of U4 from voltage divider R121 and R122. When the SWEEP TRIGGER switch is in LINE, VIDEO, or EXT position, Q13 is held cut off by R83 and CR10. A sweep can then be generated only when a negative pulse is applied to the emitter of Q13 in the Sweep Generator. The negative pulse is generated by a Pulse Shaper circuit when the output of trigger comparator U4 goes low. The Pulse Shaper consists of a differentiator (C22 and R126) and an emitter follower (Q6).

During a sweep, RETRACE BLANK is approximately −0.6V, and Q3 and output pull-up resistor R124 disable U4 to prevent trigger pulses from going to the Sweep Generator. When RETRACE BLANK is high; and when trigger signal rises above the trigger level voltage, the output of U4 switches from approximately +5V to 0V, turning on Q6 through C20. A negative-going pulse is coupled through R75 to turn on Q13 in the Sweep Generator, starting a sweep.

After the ramp is completed, the circuit returns to its dead-time state, and another trigger is required to generate another sweep. Triggers (negative transitions at U4 pin 7) may occur during the dead time, but these will not start a sweep until the end of the dead time, when the dead time capacitors are charged sufficiently to place the anode of CR7 at approximately −2V or higher.

Scans by ARTEK MEDIA =>

Scans by => ARTEK MEDIA © 2003-2005

Auto Sweep Time Current Limit (B)

Tracing between the YTO and YTF is degraded if the analyzer frequency is swept too fast. To limit the frequency sweep rate to approximately 20 MHz per msec and a maximum rate of 2 msec per division, CMOS logic gates U5 through U8 in the Auto Sweep Time Current Limit circuit select which of six different current limit values to apply to the Current Source. Since sweep rate is proportional to current, limiting the current prevents the sweep rate from exceeding a certain upper limit. Control lines from the front-panel FREQUENCY SPAN/DIV, FREQUENCY SPAN MODE, and FREQUENCY BAND GHz switches drive the current limit logic. Refer to the simplified schematic, Figure 8-25.

Q11B supplies current to the charge timing capacitors C12 and C13 in the Sweep Generator. Q11A supplies a current (proportional to timing capacitor current) to sampling resistors R27 through R33 in the Auto Swep Time Current Limit circuit. The voltage developed across the sampling resistors is proportional to sweep rate and is compared with a reference voltage by op amp U1. When the input voltage at U1 pin 2 is less than the reference voltage at pin 3, the current source is not current limited. The output of U1 is approximately + 14 volts, CR30 is reverse biased, and the current source is not affected. If the Current Source current level becomes high enough to cause the voltage across the sampling resistors (that is, the voltage at U1 pin 2) to equal the voltage at U1 pin 3, the current limit is activated. The output of U1 is approximately + 10V or less, and CR30 is forward biased, closing the feedback loop around Q11A, U1, CR30, U2B, and associated circuitry. When this feedback loop is closed, the voltage at the positive input of op amp U2B is pulled down by current through R26. This reduces the voltage developed by U2B at the emitters of Q11A and Q11B, reducing the current supplied by Q11A to sampling resistors R27 through R33, and the current supplied by Q11B to the timing capacitors in the Sweep Generator. The collector currents are reduced to a level at which the sampling resistor voltage equals the reference voltage. AST LIMIT R25 sets the reference voltage. R25 is adjusted to compensate for the mismatch in collector currents for equal base-emitter voltages in Q11A and Q11B.

The reference voltage is nominally +1V, but to compensate for mismatch in Q11, it can range between +0.6V and +1.4V.

Because of the similar operation of each of the current limits, only one case will be described. In the example, the analyzer is in PER DIV, 200 kHz/DIV, RESOLUTION BW of 10 kHz, VIDEO FILTER OFF. NARROW AND FS – 10 control lines are approximately +15V. CR27 and CR28 are forward biased. R54 and R55 form a voltage divider, causing the input to U5D pin 12 to be approximately +5V, a logic high. The output of U5D is approximately +5V, and Q31 is turned on, placing R32 in parallel with R33. The output of U7C is low, FULL is low, and ST CAL is high, so Q5, Q7, and Q28 through Q30 are off. As shown in the table, Note 8, on the schematic, when the sampling resistance is R32 in parallel with R33, the sweep rate cannot be faster than ≈2 mSEC/DIV in AUTO. With the above bandwidth and frequency span settings, the auto sweep time is approximately 45 ms (4.5 ms/DIV). Suppose the bandwidth is now increased to 100 kHz. This increase in bandwidth by a factor of 10 would cause the current source to increase current by a factor of 100 (if the current limit were not present), resulting in a sweep rate of 45 μsec/div. However, the Current Source current only increases to the level that causes the voltage across the sampling resistors to equal the reference voltage at U1 pin 3. At this point CR30 becomes forward biased and prevents current from increasing beyond the level required to generate a 2 ms per division sweep. In other frequency span widths, different sweep rate limits are set when the current limit logic selects different values of sampling resistance. See the table on the schematic (Note 8) for the current limits for various frequency span settings.

In calibrated sweep times, ST CAL is grounded, pulling U8A pin 1 low. U8A pin 2 goes high and turns on Q28, placing R27 in the sampling resistance. Q28 is turned on, making the sampling resistance 99.9 ohms. This sampling resistance is low enough to prevent current limiting in any of the calibrated sweep times.

(Continued on next page.)

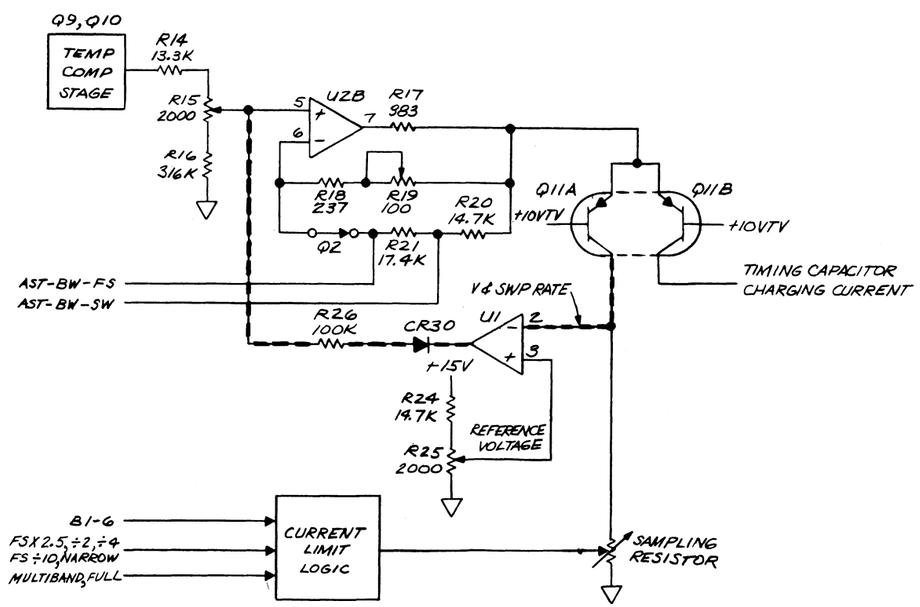

Figure 8-25. Auto Sweep Time Current Limit, Simplified Schematic

Scans by => ARTEK MEDIA © 2003-2005

(Continued from preceding page.)

External Sweep Input Buffer (F)

When a 0V to +10V signal is applied to the EXT SWEEP INPUT on the rear panel, it is level-shifted by resistive divider R127 and R128 and buffered by amplifier U9A. The output of op amp U9A is a −5V to +5V signal which becomes the analyzer sweep signal when the front panel SWEEP SOURCE switch is in the EXT position. VR3 protects U9A from excessive voltages applied to the input.

1/N Sweep Attenuator (G)

To maintain per division frequency span calibration in harmonic nixing modes, the sweep voltage supplied to the Sweep Attenuator Assembly is the −5V to +5V SWEEP divided by N. (N is the harmonic number.) In the .01 to 1.8 GHz frequency band, N = 1. Band control line B1 is +15V, and B2 through B8 are pulled to approximately −15V through pull-down resistors in the Sweep Generator Assembly and the Frequency control Assembly. Q22 through Q27 of the 1/N Sweep Attenuator are turned off, and the sweep signal applied to R101 is not attenuated. The sweep is buffered by unity gain follower U9B. Operation is the same in the 1.7 to 4.1 GHz frequency band (N = 1). In the 3.8 to 8.5 GHz frequency band (N 7 2), B3 is at +15V, turning on Q27. This causes R101 and R104 to form a 2 to 1 voltage divider, and 1/N SWP from U9B is now −2.5V to +2.5V. The operation of the 1/N Sweep Attenuator is similar for the remaining bands. Refer to the table on the schematic (Note 6) for the band line and harmonic number for each frequency band.

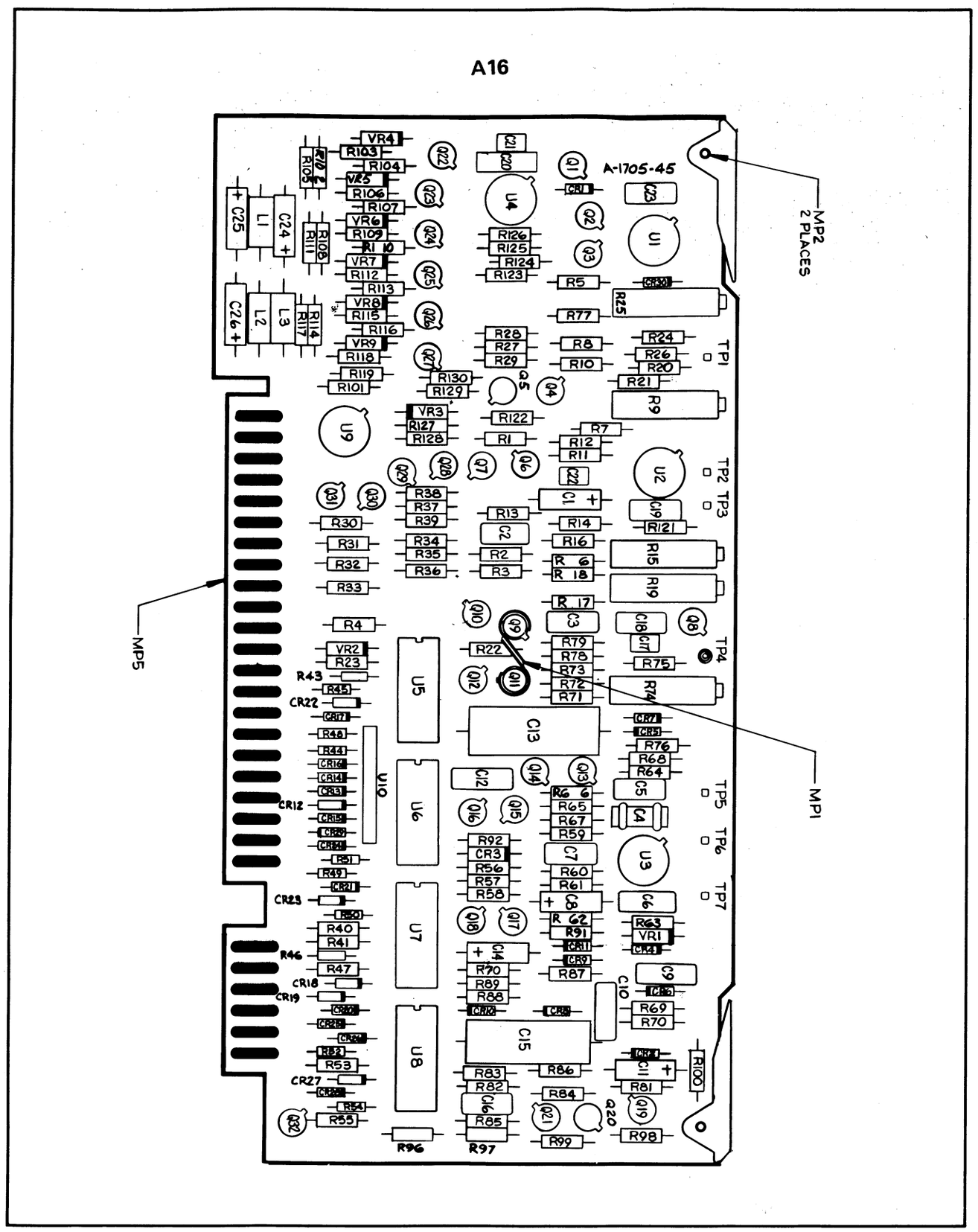

Figure 8-26. A16 Sweep Generator Assembly, Component Locations

Scans by => ARTEK MEDIA © 2003-2005

A16 SWEEP GENERATOR ASSEMBLY 08565-60019

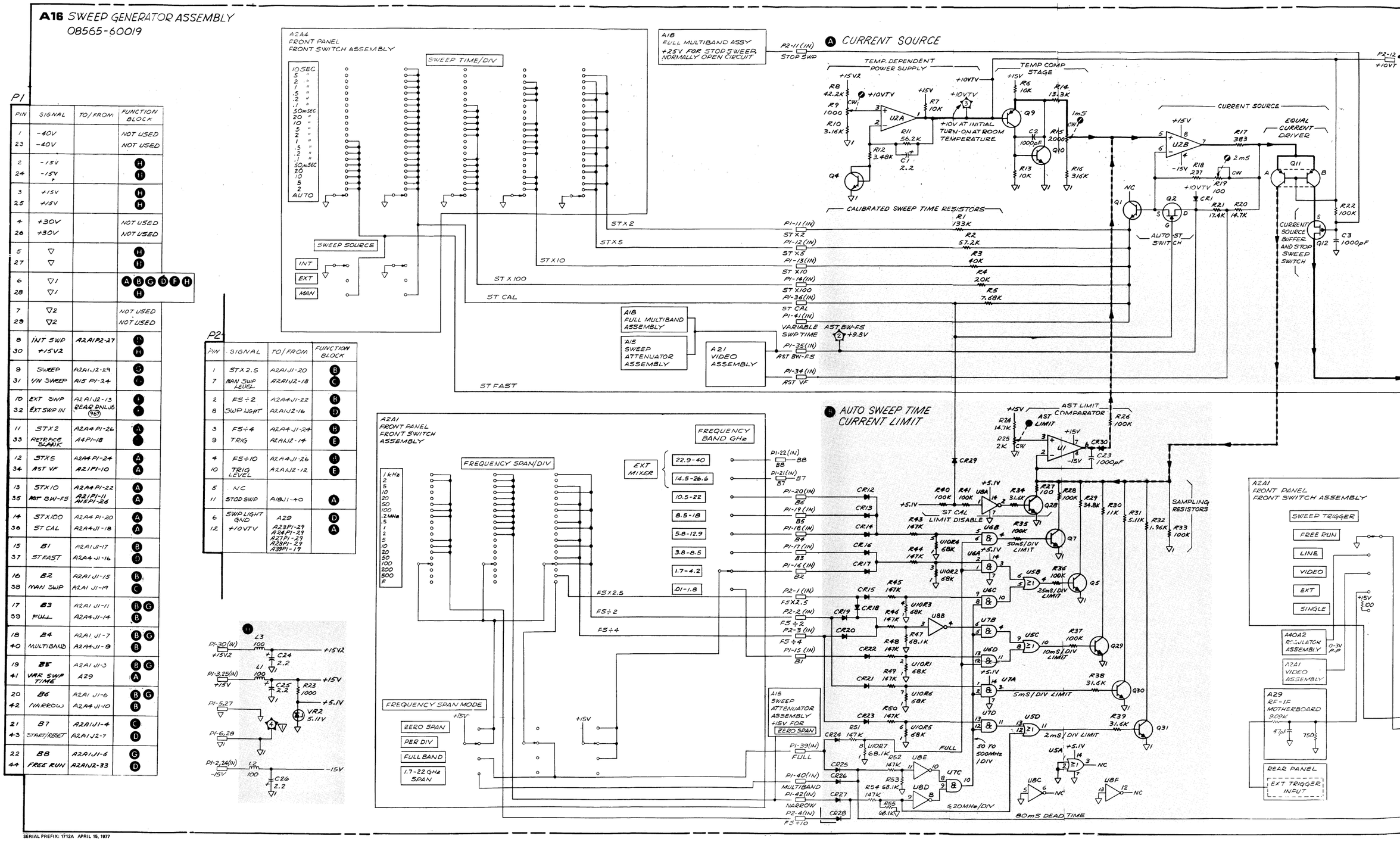

P1

PIN	SIGNAL	TO/FROM	FUNCTION BLOCK
1	-40V		NOT USED
23	-40V		NOT USED
2	-15V		H
24	-15V		H
3	+15V		H
25	+15V		H
4	+30V		NOT USED
26	+30V		NOT USED
5	▽		H
27	▽		H
6	▽1		A B G D F H
28	▽1		H
7	▽2		NOT USED
29	▽2		NOT USED
8	INT SWP	A2A1P2-27	H
30	+15V2		H
9	SWEEP	A2A1J2-29	G
31	V/N SWEEP	A15 P1-24	A
10	EXT SWP	A2A1J2-13	E
32	EXT SWP IN	REAR PNLJ6 (967)	E
11	STX2	A2A4 P1-26	A
33	RETRACE BLANK	A4P1-18	
12	STX5	A2A4 P1-24	A
34	AST VF	A21P1-10	A
13	STX10	A2A4 P1-22	A
35	AST BW-FS	A21P1-11, A15P1-26	A
14	STX100	A2A4 P1-20	A
36	ST CAL	A2A4J1-18	A
15	B1	A2A1J1-17	B
37	ST FAST	A2A4J1-16	D
16	B2	A2A1 J1-15	B
38	MAN SWP	A2A1 J1-19	C
17	B3	A2A1 J1-11	B G
39	FULL	A2A4J1-14	B
18	B4	A2A1 J1-7	B G
40	MULTIBAND	A2A4J1-9	B
19	B5	A2A1 J1-3	B G
41	VAR SWP TIME	A29	A
20	B6	A2A1 J1-6	B G
42	NARROW	A2A4 J1-10	B
21	B7	A2A1J1-4	C
43	START/RESET	A2A1J2-7	D
22	B8	A2A1J1-6	G
44	FREE RUN	A2A1J2-33	D

P2

PIN	SIGNAL	TO/FROM	FUNCTION BLOCK
1	STX2.5	A2A1J1-20	B
7	MAN SWP LEVEL	A2A1J2-18	C
2	FS÷2	A2A4J1-22	B
8	SWP LIGHT	A2A1J2-16	D
3	FS÷4	A2A4J1-24	B
9	TRIG	A2A1J2-14	E
4	FS÷10	A2A4J1-26	B
10	TRIG LEVEL	A2A1J2-12	E
5	NC		
11	STOP SWP	A1BJ1-40	A
6	SWP LIGHT GND	A29	D
12	+10VTV	A23P1-29, A24P1-29, A21P1-29, A28P1-29, A39P1-19	A

Scans by => ARTEK MEDIA © 2003-2005

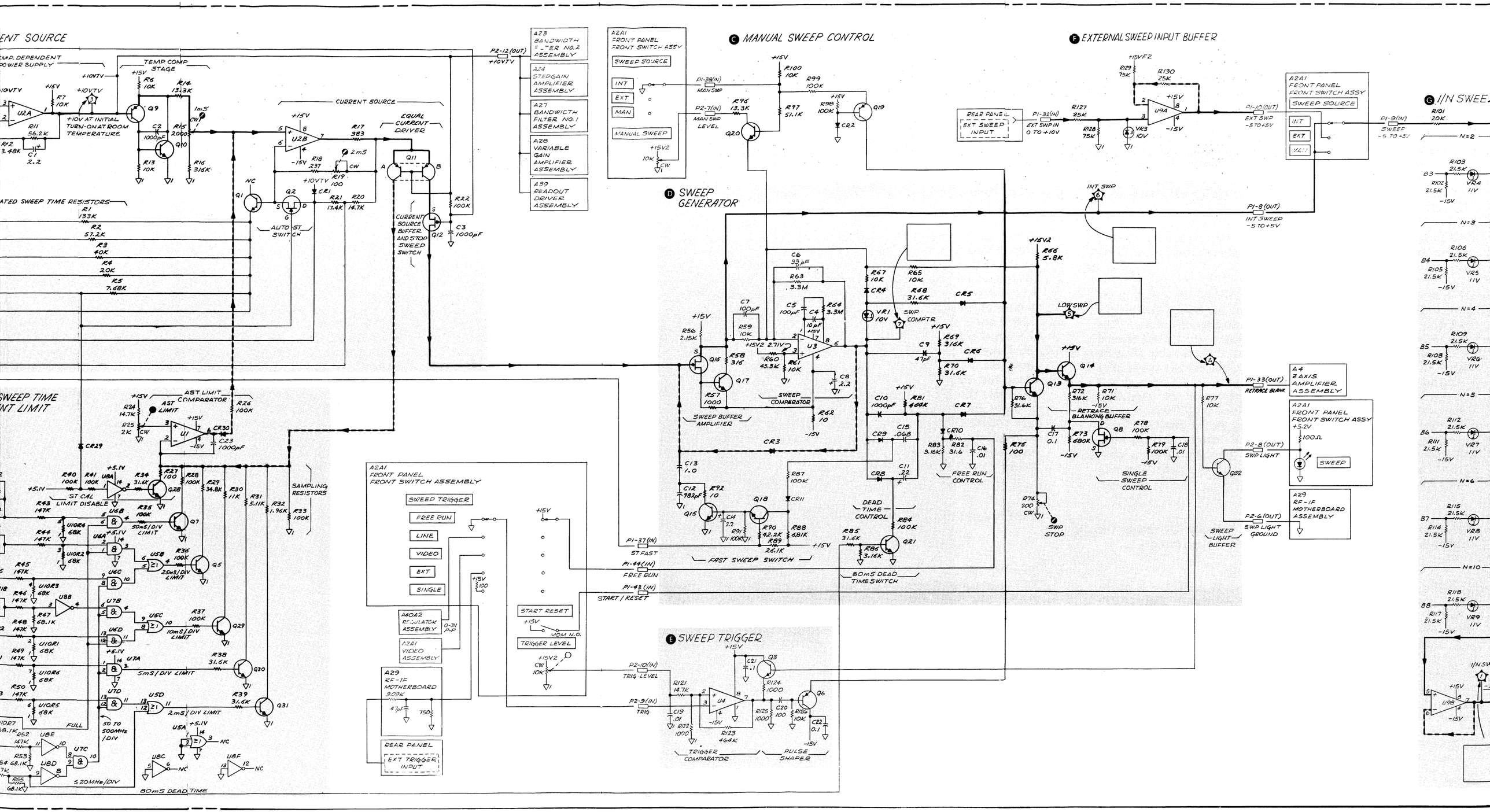

Scans by => ARTEK MEDIA © 2003-2005

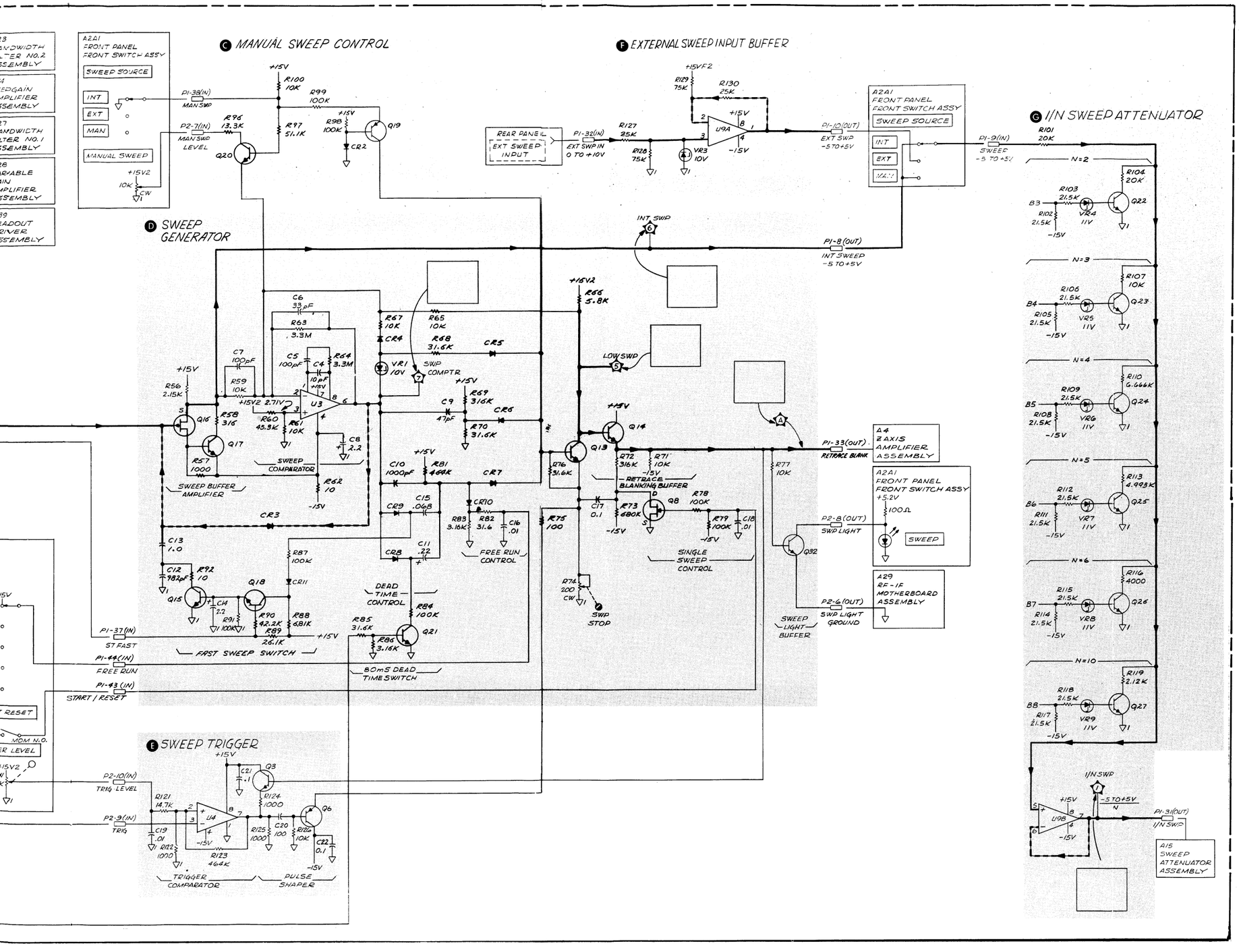

NOTES

1. REFERENCE DESIGNATORS WITHIN THIS ASSEMBLY ARE ABBREVIATED. FOR COMPLETE DESIGNATOR PREFIX WITH ASSEMBLY REFERENCE DESIGNATOR.
2. UNLESS OTHERWISE INDICATED
   RESISTANCE IN OHMS (Ω)
   CAPACITANCE IN MICROFARADS (μF)
   INDUCTANCE IN MICROHENRIES (μH)
3. TEST POINT WAVEFORMS ASSUME THE FOLLOWING SETTINGS:
   GREEN (NORMAL) SETTINGS
   FREQUENCY SPAN/DIV: 100 MHz
   FREQUENCY BAND: 1.7-4.1 GHz
   FREQUENCY: 3.000 GHz
4. TEST POINT SIGNAL VOLTAGES ARE REFERENCED TO SIGNAL GROUND (⏚) ON THIS ASSEMBLY. CONNECT THE LOW INPUT OF A DVM TO TP4 FOR MOST ACCURATE DC MEASUREMENTS. SET ANALYZER TO SINGLE SWEEP TRIGGER OR MAN SWEEP SOURCE TO MEASURE DC VOLTAGES AT TP1 & TP6.
5. MNEMONICS:
   AST = AUTO SWEEP TIME
   BW-FS = BANDWIDTH - FREQUENCY SPAN
   VF = VIDEO FILTER
   ST = SWEEP TIME
   TV = TEMPERATURE VARIABLE
6. FREQUENCY BANDS

FREQUENCY BAND GHz	BAND LINE	HARMONIC NUMBER
.01-1.8	B1	N=1
1.7-4.1	B2	N=1
3.8-8.5	B3	N=2
5.8-12.9	B4	N=3
8.5-13	B5	N=4
10.5-22	B6	N=5
14.5-26.6	B7	N=6
22.9-40	B8	N=10

7. THERE ARE GUARD RING TRACES ON THE PC BOARD WHICH ARE NOT SHOWN ON THE SCHEMATIC. THESE GUARD SENSITIVE CIRCUIT POINTS FROM LEAKAGE CURRENTS.
8. AUTO SWEEP TIME CURRENT LIMIT.

SWEEP TIME NOT LESS THAN	FREQUENCY SPAN MODE	FREQUENCY SPAN/DIV	SWEEP TIME/DIV	SAMPLING RESISTOR GROUNDED
100mS/DIV	1.7-22GHz SPAN		AUTO	B R33 (SEE NOTE 10 TYPICAL)
	FULL BAND BAND 7 OR 8		AUTO	
50mS/DIV	FULL BAND BAND 4, 5 OR 6		AUTO	B R33 R28
25mS/DIV	FULL BAND BAND 2 OR 3		AUTO	B R33
	PER DIV	500 MHz	AUTO	B R29
10mS/DIV	FULL BAND BAND 1		AUTO	B R33
	PER DIV	200 MHz	AUTO	B R30
5mS/DIV	PER DIV	100 MHz	AUTO	B R33 R31
2mS/DIV	PER DIV	≤ 50 MHz	AUTO	B R33 R32
CURRENT LIMIT DISABLED			CALIBRATED SWEEP TIMES	B R33 R27

REFERENCE DESIGNATORS

A16	
LAST USED	NOT USED
C26 CR30 L3 Q32 R130 U10 VR9	R42, R80, R93-R95, R120

9. SWEEP DEAD TIME (NOMINAL)

DEAD TIME	SWEEP TIME/DIV	FREQUENCY SPAN MODE	SWEEP GENERATOR BOARD COMPONENTS
.33mS	≤ 1mS	ZERO SPAN	D C10
22mS	≥ 2mS OR AUTO	ZERO SPAN OR PER DIV	D CR10 C15
80mS		FULL OR 1.7-22 GHz SPAN	D R21, R48 CR8, CR11

10. B OR D INDICATES AFFECTED FUNCTION BLOCK.

10 A16

Figure 8-27. A16 Sweep Generator Assembly, Schematic Diagram

Scans by => ARTEK MEDIA © 2003-2005

SERVICE SHEET 11

A15 SWEEP ATTENUATOR ASSEMBLY, CIRCUIT DESCRIPTION

The Sweep Attenuator Assembly contains the circuits which attenuate the sweep ramp, 1/N SWP, from the Sweep Generator Assembly to provide the different frequency spans as selected by the FREQUENCY SPAN/DIV control. For wide frequency spans (5 MHz/DIV to 500 MHz/DIV) the 1/N SWP signal is attenuated and applied to the Frequency Control Assembly, where it is summed with the voltage from the TUNING control. The signal then goes to the YIG Driver Assembly, which applies current to the Main Tuning Coil of the YIG-Tuned Oscillator (YTO) to control its frequency. For narrow frequency spans (1 kHz/DIV to 2 MHz/DIV) the 1/N SWP signal is attenuated and applied to the Tuning Stabilizer Control Assembly, where it is summed with the voltage from the FINE Tuning control. The output signal then goes to the Tickler Coil Driver, which applies current to the YTO tickler coil for small frequency changes.

DC control lines from the FREQUENCY SPAN/DIV switch at the front panel control transistor switches in the Sweep Attenuator Assembly to select the different sweep attenuation settings. The chart (schematic Note 7) gives the control lines which are activated (+15V) and the total attenuation factor of this assembly for each FREQUENCY SPAN/DIV setting. When one of the control lines is not activated, the front panel switch provides an open circuit for that line. If the only circuit involved was in this assembly, these lines would go to −15V because of the pull-down resistors. However, the lines also control circuits in the Readout Input Assembly, which pull a slight amount of current through these pull-down resistors. Thus, the voltage on these control lines, when they are not activated, is −14V. The FULL line is pulled down to −39V when it is not activated.

The capacitors across the inputs of U1, U3, and U4 reduce the susceptibility of these op amps to external RF interference.

With the SWEEP TIME/DIV control set to AUTO, the sweep time is automatically controlled by the Auto Sweep Time (AST) circuitry. The sweep time is varied as a function of RESOLUTION BW, FREQUENCY SPAN/DIV, and VIDEO FILTER settings to maintain absolute amplitude calibration. As the FREQUENCY SPAN/DIV switch position is changed, the control lines turn on AST transistors which connect AST resistors to ground through diodes. This controls the current in the AST BW-FS line to which all the AST resistors in this assembly are connected. The resistors in turn control the sweep time of the sweep ramp generated in the Sweep Generator Assembly. As the FREQUENCY SPAN/DIV is narrowed, with RESOLUTION BW and VIDEO FILTER held constant, the resistance on the AST BW-FS line is lowered, causing the sweep rate to increase. However, the sweep rate is limited to a maximum of 20 MHz/ms and 2 ms/div for AUTO sweep time by the Current Limit circuit in the Sweep Generator Assembly.

÷1, ÷2, ÷4, Zero Sweep Attenuator (A)

The 1/N SWP input comes from the Sweep Generator Assembly. It has a level of −5V to +5V for fundamental (N = 1) mixing mode operation. To maintain per-division frequency span calibration on harmonic mixing bands, this sweep input is reduced by the factor 1/N in the Sweep Generator Assembly (see schematic Note 6). This stage has a resistive voltage divider in which resistors are connected one at a time to ground by transistor switches. Op amp U5 is a non-inverting unity gain buffer.

When none of the control lines is activated, this stage has unity gain. When the FS ÷2 line is activated (+15V), Q22 and Q18 are turned on, connecting R5 to ground and producing a ÷2 voltage divider of R1 and R5. Q22 connects the ÷2 AST resistor R4 to ground through the base-emitter diode of Q18. When the ÷4 line is activated (+15V), Q23 and Q19 are turned on, connecting R9 to ground, and producing a ÷4 voltage divider of R1 and R9. Q23 connects the ÷4 AST resistor R8 to ground through the base-emitter diode of Q19. When ZERO SPAN mode is selected, the ZERO line is activated (+15V), turning on Q24 and Q20 to shunt the positive input of U5 to ground. Because of the saturation resistance of Q20 there is actually a voltage division of only a few thousand. This by itself is not sufficient attenuation of the sweep to put the analyzer in ZERO SPAN mode, so the ZERO line also activates, through CR14 and CR17 respectively, the ÷100 attenuator and switches the sweep to the TICK ATTEN SWP line. Q24 connects the Zero AST resistor R12 to ground through the base-emitter diode of Q20. The Tuning Stabilizer Control Assembly momentarily activates the ZERO line during the YTO frequency stabilization process.

Per Div Auto Sweep Time Switch (B)

The Per Div AST resistor R16 is connected to ground through Q27 and CR3 when the spectrum analyzer is neither in FULL BAND nor in PER DIV F mode. The FULL line is activated (+15V) for FULL BAND and PER DIV F modes. This turns on the inverter Q26, which turns off Q27. Thus R16 is disconnected, slowing down the auto sweep. The signal through CR2 turns off Q25, disconnecting the ÷1 AST resistor R36 when the FULL line is activated.

When the FS ÷ 10 line is activated (+15V), Q21 is also turned on connecting the ÷ 10 AST resistor R38 to ground through CR10.

÷1, ÷10, X2.5 Sweep Attenuator (C)

This stage has op amp U2 connected as an inverting amplifier in which different sets of input and feedback resistors are selected by FET switches. Since the three sections (÷1, ÷10, and X2.5), which are switched in one at a time, are nearly identical, only the operation of the ÷10 section will be described. When the FS ÷10 line is not activated (open circuit at the front panel), Q12 has approximately −14V at the base and −14.5V at the emitter. This is enough reverse bias at the gate of Q9 to keep it turned off. R27 is a pull-down resistor which provides −15V for the FS ÷10 line.

When the FS ÷10 line is activated (+15V), Q12 is turned on with the base at approximately +0.6V and the emitter at 0V, connecting the gate of Q9 to ground. Now Q9 is no longer reverse biased By R25, but is turned on because the source and gate are at the same potential. (The source is at a virtual ground because of the operation of U2.) With Q9 on, the input resistor R22 and feedback resistor R23 are connected to the negative input of U2, giving an inverted attenuation of 10.

With Q9 on, CR5 has no effect; but when Q9 and this section are off, CR5 clamps the drain voltage of Q9 at −0.6V. This prevents Q9 from being turned on during part of a span because of the signal from the output of U2 being applied through R23. R24 reduces the current flowing through CR5 to prevent overloading of the output of U2. The ÷1 and X2.5 sections have higher value feedback resistors and do not have this current limiting resistor.

When the FS X2-5 line is activated (+15V), the X2.5 section is switched in, giving an inverted gain of 2.5 through the stage. There is no X2.5 AST resistor as this is the base freqency span from which all Per Div AST resistors are referenced. When neither the FS Δ10 nor the FS X2.5 line is activated, Q27 is turned off (CR7, CR8, and Q17 perform a NOR function) and the ÷1 section is switched in, giving an inverted unity gain. For ÷1, Q25 is turned on, connecting the ÷1 AST resistor R36 to ground through CR9.

÷1, ÷100 Sweep Attenuator (D)

This stage has op amp U1 connected as an inverting amplifier in which different sets of input and feedback resistors are selected by FET switches. These two sections (÷ 1 and ÷ 100) are nearly identical to the sections of the ÷1, ÷10, X2.5 Sweep Attenuator stage. (See the description of the ÷10 section.) When the FS ÷100 line is activated (+15V), the ÷100 section is switched in, giving an inverted attenuation of 100. The FS ÷100 line, when activated, also turns on Q14, connecting the ÷100 AST resistor R52 to ground through CR15. When the FS ÷100 line is not activated, the inverter Q6 is turned off and the ÷ 1 section is switched in, giving an inverted unity gain. MAIN SWP OFFSET adjustment R53 is adjusted to compensate for the op amp's offset voltage so that the signal remains centered on the CRT when the FREQUENCY SPAN/DIV control is switched from 5 MHz/DIV to 2 MHz/DIV (i.e., when the sweep is switched from MAIN ATTEN SWP to TICK ATTEN SWP).

Main and Tickler C

This stage is essenti
sweep ramp to eithe
ing Stabilizer Co
SPAN/DIV (5 MH
is not activated (ope
on, shunting the sw
and Q7 are now tu
ground at the positi
ATTEN SWP) fro
the Frequency Con
voltage from the T
the YIG Driver Ass
to the Main Coil of
in which the freque

When the NARRO
the Narrow AST res

Scans by => ARTEK MEDIA © 2003-2005

ASSEMBLY, CIRCUIT

ntains the circuits which at- from the Sweep Generator quency spans as selected by ol. For wide frequency spans /N SWP signal is attenuated l Assembly, where it is sum- NG control. The signal then which applies current to the Oscillator (YTO) to control y spans (1 kHz/DIV to 2 tenuated and applied to the where it is summed with the rol. The output signal then applies current to the YTO s.

CY SPAN/DIV switch at the es in the Sweep Attenuator ep attenuation settings. The trol lines which are activated or of this assembly for each When one of the control lines ch provides an open circuit olved was in this assembly, e of the pull-down resistors. cuits in the Readout Input nt of current through these on these control lines, when FULL line is pulled down to

U1, U3, and U4 reduce the rnal RF interference.

ol set to AUTO, the sweep e Auto Sweep Time (AST) s a function of RESOLU- V, and VIDEO FILTER set- e calibration. As the FRE- on is changed, the control connect AST resistors to the current in the AST BW- rs in this assembly are con- he sweep time of the sweep tor Assembly. As the FRE- ith RESOLUTION BW and sistance on the AST BW-FS e to increase. However, the f 20 MHz/ms and 2 ms/div Limit circuit in the Sweep

÷1, ÷2, ÷4, Zero Sweep Attenuator (A)

The 1/N SWP input comes from the Sweep Generator Assembly. It has a level of −5V to +5V for fundamental (N = 1) mixing mode operation. To maintain per-division frequency span calibration on harmonic mixing bands, this sweep input is reduced by the factor 1/N in the Sweep Generator Assembly (see schematic Note 6). This stage has a resistive voltage divider in which resistors are connected one at a time to ground by transistor switches. Op amp U5 is a non-inverting unity gain buffer.

When none of the control lines is activated, this stage has unity gain. When the FS ÷2 line is activated (+15V), Q22 and Q18 are turned on, connecting R5 to ground and producing a ÷2 voltage divider of R1 and R5. Q22 connects the ÷2 AST resistor R4 to ground through the base-emitter diode of Q18. When the ÷4 line is activated (+15V), Q23 and Q19 are turned on, connecting R9 to ground, and producing a ÷4 voltage divider of R1 and R9. Q23 connects the ÷4 AST resistor R8 to ground through the base-emitter diode of Q19. When ZERO SPAN mode is selected, the ZERO line is activated (+15V), turning on Q24 and Q20 to shunt the positive input of U5 to ground. Because of the saturation resistance of Q20 there is actually a voltage division of only a few thousand. This by itself is not sufficient attenuation of the sweep to put the analyzer in ZERO SPAN mode, so the ZERO line also activates, through CR14 and CR17 respectively, the ÷100 attenuator and switches the sweep to the TICK ATTEN SWP line. Q24 connects the Zero AST resistor R12 to ground through the base-emitter diode of Q20. The Tuning Stabilizer Control Assembly momentarily activates the ZERO line during the YTO frequency stabilization process.

Per Div Auto Sweep Time Switch (B)

The Per Div AST resistor R16 is connected to ground through Q27 and CR3 when the spectrum analyzer is neither in FULL BAND nor in PER DIV F mode. The FULL line is activated (+15V) for FULL BAND and PER DIV F modes. This turns on the inverter Q26, which turns off Q27. Thus R16 is disconnected, slowing down the auto sweep. The signal through CR2 turns off Q25, disconnecting the ÷1 AST resistor R36 when the FULL line is activated.

When the FS ÷ 10 line is activated (+15V), Q21 is also turned on connecting the ÷ 10 AST resistor R38 to ground through CR10.

÷1, ÷10, X2.5 Sweep Attenuator (C)

This stage has op amp U2 connected as an inverting amplifier in which different sets of input and feedback resistors are selected by FET switches. Since the three sections (÷1, ÷10, and X2.5), which are switched in one at a time, are nearly identical, only the operation of the ÷10 section will be described. When the FS ÷10 line is not activated (open circuit at the front panel), Q12 has approximately −14V at the base and −14.5V at the emitter. This is enough reverse bias at the gate of Q9 to keep it turned off. R27 is a pull-down resistor which provides −15V for the FS ÷10 line.

When the FS ÷10 line is activated (+15V), Q12 is turned on with the base at approximately +0.6V and the emitter at 0V, connecting the gate of Q9 to ground. Now Q9 is no longer reverse biased By R25, but is turned on because the source and gate are at the same potential. (The source is at a virtual ground because of the operation of U2.) With Q9 on, the input resistor R22 and feedback resistor R23 are connected to the negative input of U2, giving an inverted attenuation of 10.

With Q9 on, CR5 has no effect; but when Q9 and this section are off, CR5 clamps the drain voltage of Q9 at −0.6V. This prevents Q9 from being turned on during part of a span because of the signal from the output of U2 being applied through R23. R24 reduces the current flowing through CR5 to prevent overloading of the output of U2. The ÷1 and X2.5 sections have higher value feedback resistors and do not have this current limiting resistor.

When the FS X2-5 line is activated (+15V), the X2.5 section is switched in, giving an inverted gain of 2.5 through the stage. There is no X2.5 AST resistor as this is the base freqency span from which all Per Div AST resistors are referenced. When neither the FS Δ10 nor the FS X2.5 line is activated, Q27 is turned off (CR7, CR8, and Q17 perform a NOR function) and the ÷1 section is switched in, giving an inverted unity gain. For ÷1, Q25 is turned on, connecting the ÷1 AST resistor R36 to ground through CR9.

÷1, ÷100 Sweep Attenuator (D)

This stage has op amp U1 connected as an inverting amplifier in which different sets of input and feedback resistors are selected by FET switches. These two sections (÷1 and ÷100) are nearly identical to the sections of the ÷1, ÷10, X2.5 Sweep Attenuator stage. (See the description of the ÷10 section.) When the FS ÷100 line is activated (+15V), the ÷100 section is switched in, giving an inverted attenuation of 100. The FS ÷100 line, when activated, also turns on Q14, connecting the ÷100 AST resistor R52 to ground through CR15. When the FS ÷100 line is not activated, the inverter Q6 is turned off and the ÷ 1 section is switched in, giving an inverted unity gain. MAIN SWP OFFSET adjustment R53 is adjusted to compensate for the op amp's offset voltage so that the signal remains centered on the CRT when the FREQUENCY SPAN/DIV control is switched from 5 MHz/DIV to 2 MHz/DIV (i.e., when the sweep is switched from MAIN ATTEN SWP to TICK ATTEN SWP).

Main and Tickler Coil Switches (E)

This stage is essentially an SPDT switch, routing the attenuated sweep ramp to either the Frequency Control Assembly or the Tuning Stabilizer Control Assembly. For wide FREQUENCY SPAN/DIV (5 MHz/DIV to 500 MHz/DIV) the NARROW line is not activated (open circuit at the front panel), and Q16 is turned on, shunting the sweep to ground at the positive input of U4. Q15 and Q7 are now turned off, so they do not shunt the sweep to ground at the positive input of U3. The attenuated sweep (MAIN ATTEN SWP) from this unity gain buffer amplifier is applied to the Frequency Control Assembly, where it is summed with the voltage from the TUNING control. The output signal then goes to the YIG Driver Assembly, where the YTO Driver applies a current to the Main Coil of the YTO, tuning the YTO over its full range, in which the frequency is proportional to the current.

When the NARROW line is activated, Q5 is turned on, connecting the Narrow AST resistor R62 to ground through CR18.

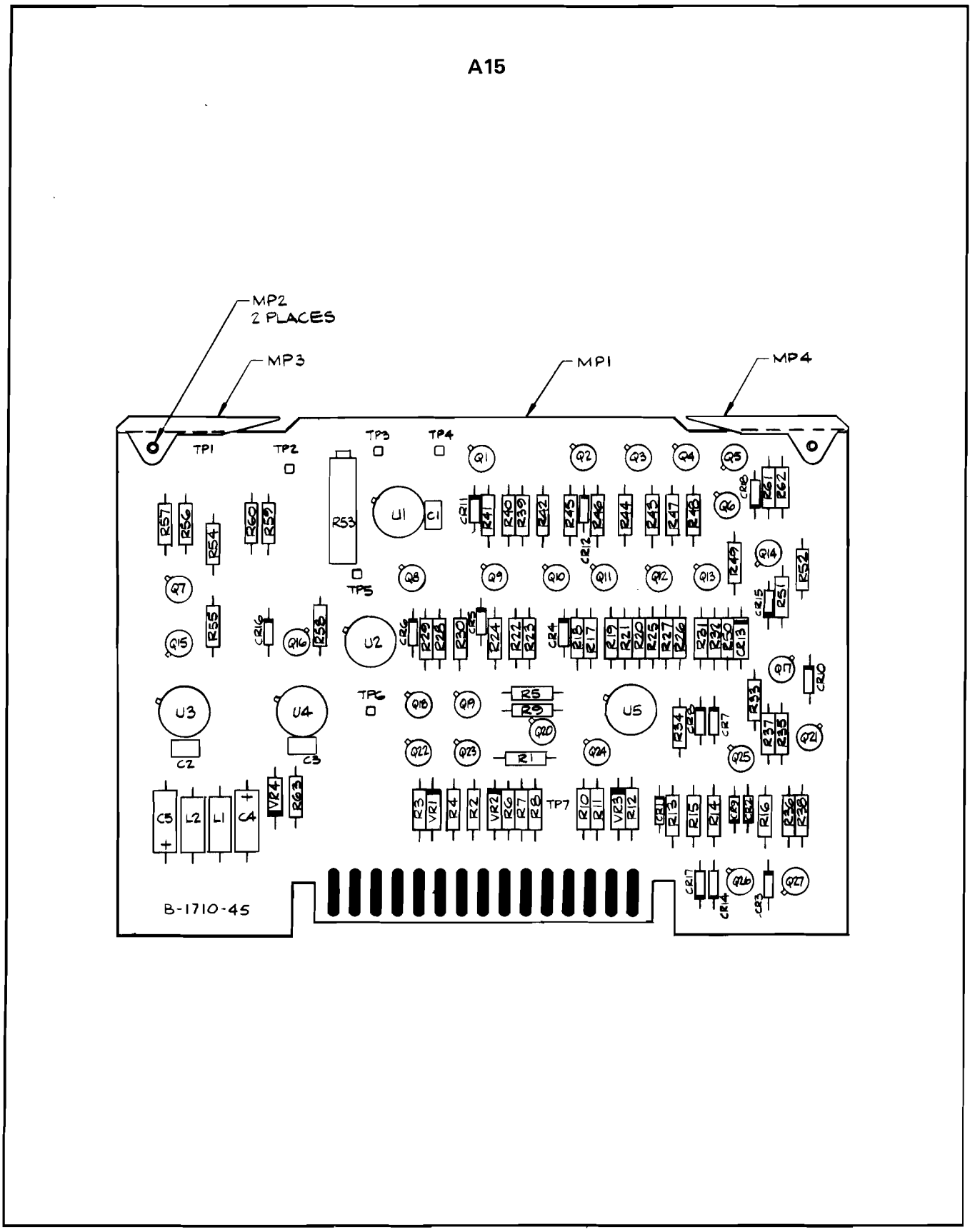

Figure 8-28. A15 Sweep Attenuator Assembly, Component Locations

Scans by ARTEK MEDIA =>

Scans by => ARTEK MEDIA © 2003-2005

A15 SWEEP ATTENUATOR ASSEMBLY
08565-60032

P1

PIN	SIGNAL	TO/FROM	FUNCTION BLOCK
1	-40V		F
16	-40V		F
2	-15V		F
17	-15V		F
3	+15V		F
18	+15V		F
4	+30V		NOT USED
19	+30V		NOT USED
5	▽		F
20	▽		F
6	▽1		F
21	▽1		F
7	▽2		F
22	▽2		F
8	NC		
23	MAIN ATTEN SWP	A17 P1-11	E
9	NC		
24	1/N SWP	A16 P1-24	A
10	TICK ATTEN SWP	A14 P1-10	E
25	NC		
11	FS X 2.5	A2A1J1-20	C
26	AST BW-FS	A16 P1-35	A B C D E
12	FS÷2	A2A1J1-22	A
27	FULL	A2A1J1-13	B
13	FS÷4	A2A1J1-24	A
28	NC		
14	FS÷10	A2A1J1-26	C
29	ZERO	A2A1J1-5 A14 P1-29	A
15	FS÷100	A2A1J1-28	D
30	NARROW	A2A1J1-1	E

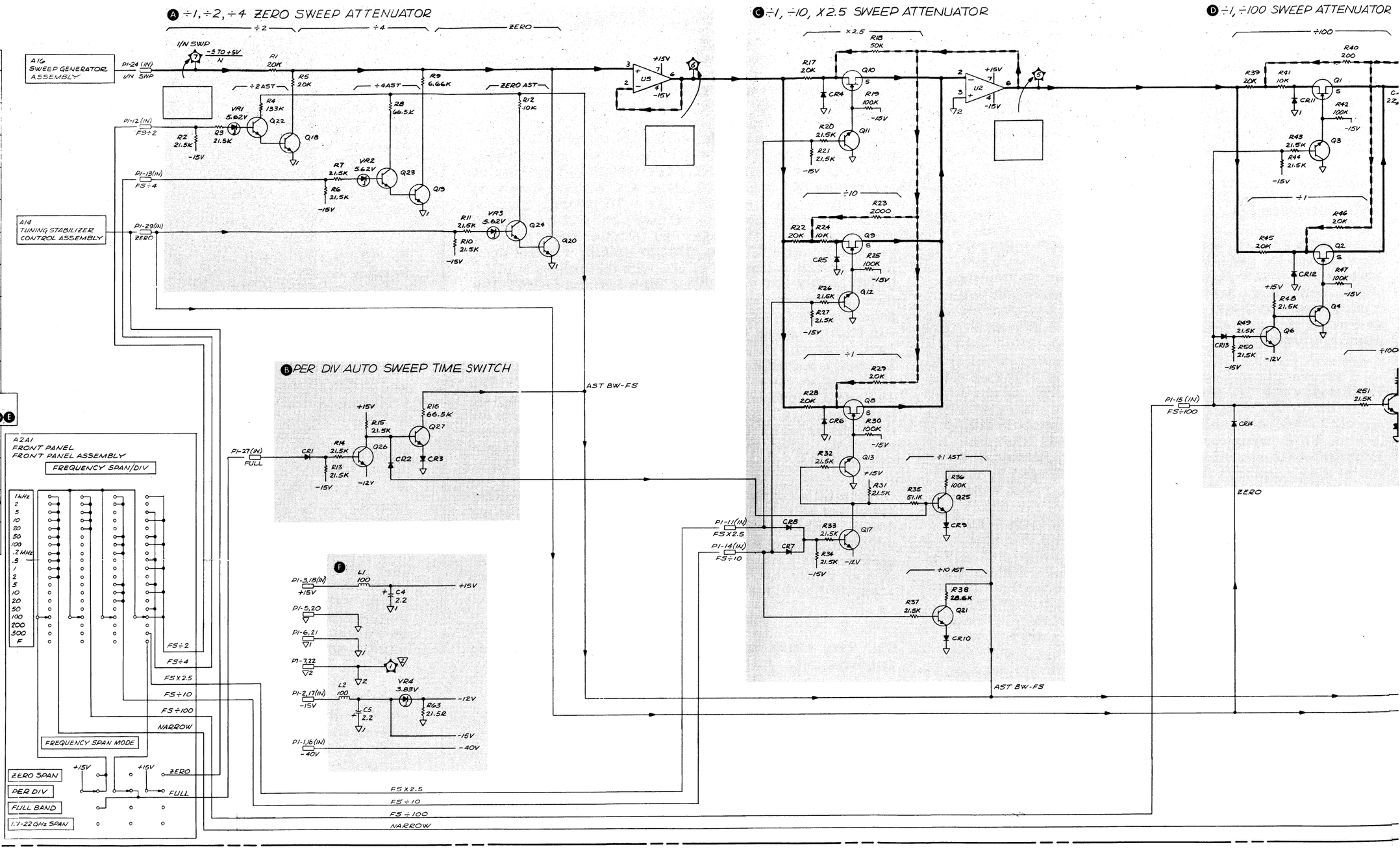

SERIAL PREFIX: 1712A APRIL 15, 1977

Scans by => ARTEK MEDIA © 2003-2005

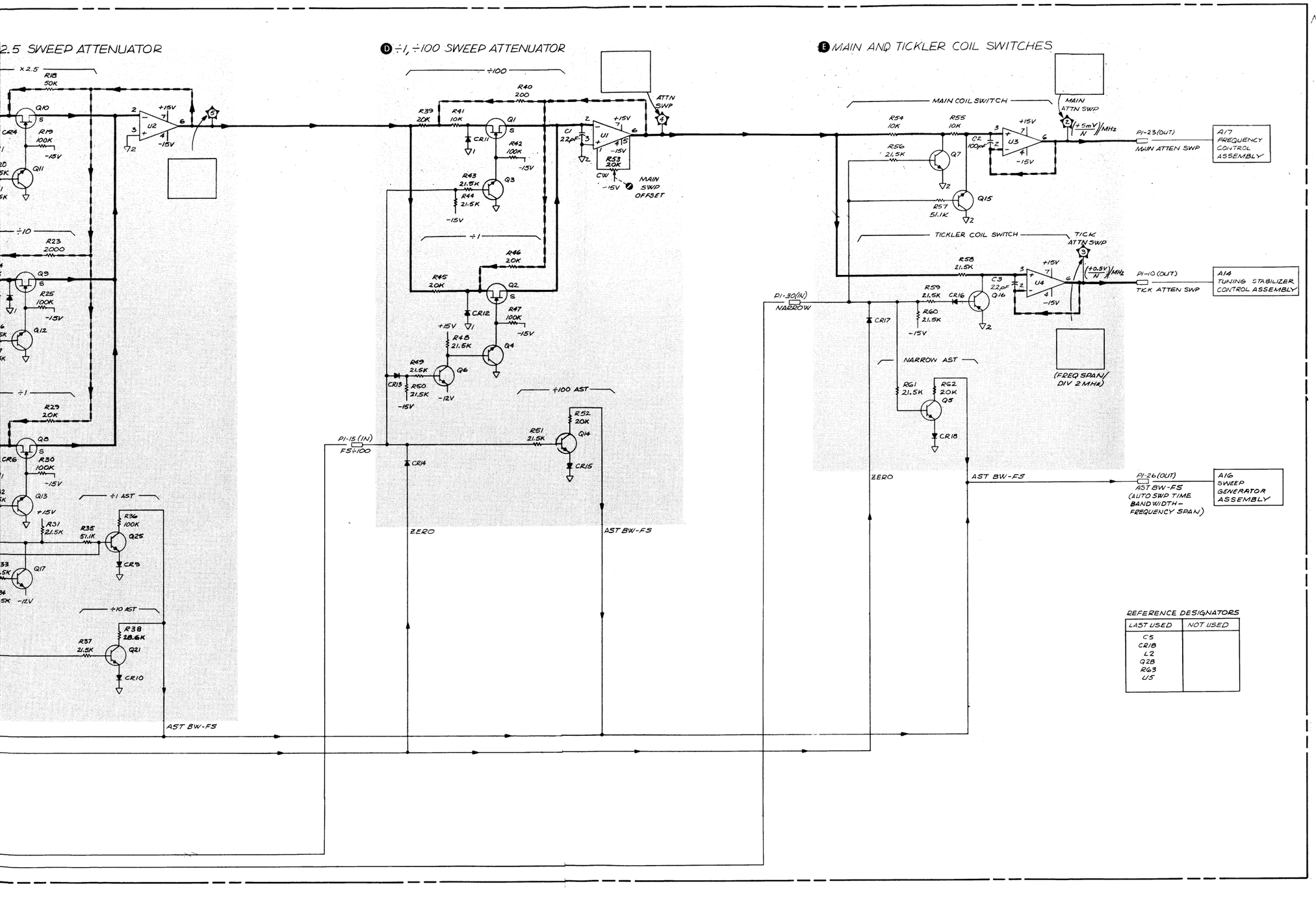

NOTES

1. REFERENCE DESIGNATORS WITHIN THIS ASSEMBLY ARE ABBREVIATED. FOR COMPLETE DESIGNATOR PREFIX WITH ASSEMBLY REFERENCE DESIGNATOR.

2. UNLESS OTHERWISE INDICATED:
   RESISTANCE IN OHMS (Ω)
   CAPACITANCE IN MICROFARADS (μF)
   INDUCTANCE IN MICROHENRIES (μH)

3. TEST POINT WAVE FORMS ASSUME THE FOLLOWING SETTINGS:
   GREEN (NORMAL) SETTINGS
   FREQUENCY SPAN/DIV: 100 MHz
   FREQUENCY BAND: 1.7-4.1 GHz
   FREQUENCY: 3.000 GHz

4. TEST POINT SIGNAL VOLTAGES ARE REFERENCED TO SIGNAL GROUND ▽1 ON THIS ASSEMBLY. CONNECT THE LOW INPUT FROM A DVM TO TP1 FOR MOST ACCURATE DC MEASUREMENTS. FOR SOME TEST POINTS NEED TO SET ANALYZER TO SINGLE SWEEP SO HAVE A DC VOLTAGE WITHOUT SWEEP.

5. TUNING SENSITIVITIES (IN $\frac{mV}{MHz}$) ARE FOR THE YTO (1ST LO) NTH HARMONIC. THE TUNING SENSITIVITIES FOR THE YTO FUNDAMENTAL, ALWAYS HAS N=1. SEE NOTE 6 FOR HARMONIC NUMBER (N) VERSES FREQUENCY BAND. SET ANALYZER TO SINGLE SWEEP TRIGGER TO MEASURE DC VOLTAGES AT TEST POINTS.

6. FREQUENCY BANDS

FREQUENCY BAND GHz	BAND LINE	HARMONIC NUMBER
.01-1.8	B1	N=1
1.7-4.1	B2	N=1
3.8-8.5	B3	N=2
5.8-12.9	B4	N=3
8.5-18	B5	N=4
10.5-22	B6	N=5
14.5-26.6	B7	N=6
22.9-40	B8	N=10

7.

FREQUENCY SPAN/DIV	CONTROL LINES						ATTENUATION FACTOR	
	NARROW	FS÷100	FS÷10	FS÷4	FS÷2	FS X 2.5	TICK ATTEN SWP	MAIN ATTEN SWP
1 kHz	H	H	H		H		OFF	÷2000
2 "	H	H	H				OFF	÷1000
5 "	H	H		H			OFF	÷400
10 "	H	H			H		OFF	÷200
20 "	H	H					OFF	÷100
50 "	H		H	H			OFF	÷40
100 "	H		H		H		OFF	÷20
.2 MHz	H		H				OFF	÷10
.5 "	H			H			OFF	÷4
1 "	H				H		OFF	÷2
2 "	H						OFF	÷1
5 "			H	H			÷40	OFF
10 "			H		H		÷20	OFF
20 "			H				÷10	OFF
50 "				H			÷4	OFF
100 "					H		÷2	OFF
200 "							÷1	OFF
500 "						H	X2.5	OFF
F							—	—

H = ACTIVATED (+15V)

8. THERE ARE GUARD RING TRACES ON THE PC BOARD WHICH ARE NOT SHOWN ON THE SCHEMATIC. THESE GUARD SENSITIVE CIRCUIT POINTS FROM LEAKAGE CURRENTS

REFERENCE DESIGNATORS

LAST USED	NOT USED
C5	
CR18	
L2	
Q28	
R63	
U5	

11
A15

Figure 8-29. A15 Sweep Attenuator Assembly, Schematic Diagram

Scans by => ARTEK MEDIA © 2003-2005

SERVICE SHEET 12
A17 FREQUENCY CONTROL ASSEMBLY, CIRCUIT DESCRIPTION

The Frequency Control Assembly contains circuits for controling and displaying the frequency to which the analyzer is tuned. There are three main outputs from this assembly: a signal proportional to the YTO frequency, a signal proportional to the YTF frequency, and a signal proportional to the center (or marker) frequency. It also includes three precise, low-noise, reference power supplies. The TUNE voltage and offset voltages are derived from these. The outputs of the power supplies are also used in other assemblies in the analyzer.

The MAIN ATTEN SWP from the Sweep Attenuator Assembly is summed with the voltage from the coarse TUNING control in this assembly. The YTO FREQ ANALOG (proportional to the YTO frequency) which goes to the YIG Driver Assembly to control the YTO frequency is selected by the FREQUENCY SPAN MODE switch from one of three sources, depending on whether the analyzer is in PER DIV, FULL BAND, or 1.7 — 22 GHz SPAN mode. This signal is also applied to the YTF N/5 Attenuator circuit, which attenuates and offsets it according to the FREQUENCY BAND GHz setting. The output of this circuit is the YTF FREQ ANALOG signal (proportional to the YTF frequency) which goes to the YIG Driver Assembly to control the frequency of the YTF. The Center Frequency N/5 Attenuator circuit attenuates and offsets the voltage from the TUNING controls to provide an output proportional to the center (or marker) frequency of the analyzer.

The capacitors across the inputs of U2 through U7 reduce the susceptibility of these op amps to external RF interference.

+ 10V Reference (B)

This circuit is a precise, stable, low-noise +10.000V reference power supply. Its output, the +10V REF voltage, is the input to the +22.3V Reference and −10V Reference supplies. The +10V REF and +22.3V REF voltages go to the coarse TUNING control from which the TUNE voltage is obtained. The +10V REF and −10V REF voltages are also used in the YTF N/5 Attenuator and Center Frequency N/5 Attenuator to produce offsets; and in other assemblies where an accurate, low-noise voltage is required.

VR1 is a temperature-compensated 6.2V zener diode whose current is supplied through R7, which is bootstrapped to the output of op amp U5. R6 and C1 form a low-pass filter which filters out noise generated by VR1. The regulated voltage from VR1 is applied to the positive input of U5. Resistors R9 through R13 form a resistive voltage divider. The op amp output is driven to a level such that the output from the voltage divider, which is applied to the negative input, is equal to the voltage at the positive input. The output is set at +10.000V by means of factory-selected resistor R9 and the +10VR pot R11. R8 is a booster resistor that supplies additional output current for the stage.

+ 22.3V Reference (A)

This circuit is a precise, low-noise +22.30V reference power supply. Its output, the +22.3V REF voltage, is used along with the +10V REF voltage for generating the TUNE voltage. Op amp U4 is connected as a non-inverting amplifier with a gain (2.230) that is determined solely by R1 and R2 (unless the analyzer is in FREQUENCY BAND GHz .01 —1.8). The input is +10.000V, so the output is +22.30V. When FREQUENCY BAND GHz is set to .01 — 1.8,the B1 line is activated (+15V), which biases FET Q1 on. This shunts R5 across R1, which lowers the gain of the stage to 1.935; thus, the output voltare is +19.35V.

− 10V Reference (C)

This circuit is a precise, low-noise −10.00V reference power supply. Its output, the −10V REF voltage, is used in the YTF N/5 Attenuator and Center Frequency N/5 Attenuator to produce offsets. This voltage is also used in other asemblies where a precise, low-noise voltage is required. Op amp U7 is connected as an inverting unity gain amplifier. The input is +10.000V, so the output is −10.000V.

TUNE Buffer (D)

The +22.3V REF AND +10V REF voltages go to the coarse TUNING and FINE tuning controls at the front panel. The coarse TUNING control sets the center frequency in PER DIV mode and sets the marker frequency in the FULL BAND, PER DIV F, and 1.7 — 22 GHz SPAN modes. Op amp U5 is connected as a non-inverting, unity gain buffer. The output from +10V to +22.3V (+10V to +19.35V for FREQUENCY BAND GHz .01 —1.8) depends on the setting of the coarse TUNING control. The output from U6, the BUFF TUNE signal, goes to the Sweep + Tune Summer, where it is summed with the MAIN ATTEN SWP signal from the Sweep Attenuator Assembly. It also goes to the Center Frequency Inverter, where it eventually determines the FREQUENCY GHz readout at the front panel. The BUFF TUNE signal also goes to the Full Multiband Assembly, where it is used in the Full Marker Circuit.

Sweep + Tune Summer (F)

This stage sums the BUFF TUNE signal from the TUNE Buffer (which is proportional to center frequency in PER DIV mode) with the MAIN ATTEN SWP signal from the Sweep Attenuator Assembly (which is proportional to frequency span). Op amp U3 is connected as an inverting amplifier with unity gain for both input signals. In PER DIV mode, the output PER DIV SWEEP + TUNE signal is connected to the YTO FREQ ANALOG line, which goes to the YIG Driver Assembly where it controls the frequency of the YTO.

Span Mode Switch (G)

This stage functions as a switch in which one of three input signals is connected to the output. The output is the YTO FREQ ANALOG signal (proportional to the YTO frequency), which goes to the YIG Driver Assembly where it controls the frequency of the YTO. This line also goes to the YTF N/5 Attenuator, the outpu of which goes to the YIG Driver Assembly to control the frequency of the YTF.

The output of the Span Mode Switch is selected from the three input signals PER DIV SWEEP + TUNE, FULL FREQ ANALOG, and MULTIBAND FREQ ANALOG by turning on one of three FET switches Q2, Q4, or Q6. With the analyzer in PER DIV mode, the FULL and MULTIBAND lines are not activated (open circuit at front panel), and Q22 is turned off, which turns off Q3. The Per Div FET Q2 is then turned on by the gate-source resistor R24. The PER DIV SWEEP + TUNE signal is thus applied to the input of U2. With the analyzer in FULL BAND or PER DIV F, the FULL line is activated (+15V). This turns Q22 on, turning Q3 on. The −35V applied through Q3 biases Per Div FET Q2 off. The FULL line also turns off Q5. Full FET Q4 is then turned on by the gate-source resistor R28. Thus, the FULL FREQ ANALOG signal from the Full Multiband Assembly is applied to the input of U2. With the analyzer in 1.7 — 22 GHz SPAN mode, the MULTIBAND line is activated (+15V). This turns Q22 off, turning Q3 on. The −35V applied through Q3 biases Per Div FET Q2 off. The MULTIBAND line also turns off Q7. Multiband FET Q6 is then turned on by the gate-source resistor R31. Thus, the MULTIBAND FREQ ANALOG signal from the Full Multiband Assembly is applied to the input of U2.

Op amp U2 is connected as a non-inverting, unity gain buffer. The output of U2 is the YTO FREQ ANALOG signal, which is a precise voltage proportional to the frequency of the YTO. The sensitivity at this point is −5 mV per MHz for fundamental frequency of the YTO. This sensitivity is divided by the harmonic number N for the harmonic mixing frequency bands (see schematic Notes 6 and 7).

The YTO FREQ ANALOG signal goes to the following assemblies: and

1. YIG Driver Assembly, where it controls the frequency of the YTO by controlling the current in the Main Coil of the YTO;
2. Bias Assembly, where it controls (as a function of frequency) the FLATNESS signal to the Variable Gain Amplifier Assembly, which controls the IF gain to compensate for losses is the RF circuitry;
3. Full Multiband Assembly, where it is used in the Oversweep Blanking Circuit.

Scans by => ARTEK MEDIA © 2003-2005

The YTO FREQ ANALOG also is applied to the YTF N/5 Attenuator circuit, the output of which is the YTF FREQ ANALOG signal (proportional to the frequency of the YTF).

YTF N/5 Attenuator

THE YTO FREQ ANALOG signal from the FREQUENCY SPAN MODE switch goes to this stage, where it is attenuated and offset an amount selected by the band lines B1 through B8, from the FREQUENCY BAND GHz switch. The output of this stage is the YTF FREQ ANALOG signal (proportional to the YTF frequency) that goes to the YIG Driver Assembly, where it controls the frequency to which the YTF is tuned.

The YTF N/5 Attenuator circuit has op amp U8 connected as an inverting amplifier in which different sets of input and feedback resistors are selected by FET switches. There are five nearly identical sections, which are switched in one at a time. They provide inverted gains of N/5 where N = 1 to 5. The operation of the N = 2− section will be described. When the B3 line is not activated (open circuit at the front panel), Q11 has approximately −15V at both the base and the emitter; this is enough reverse bias at the gate of Q10 to keep it turned off. Pull-down resistor R87 in the Center Frequency N/5 Attenuator circuit provides −15V for the B3 line.

When the B3 line is activated (+15V), Q11 is turned on with the base at approximately +0.6V and the emitter at 0V, reverse biased by R45 but is turned on because the source and gate are at the same potential. (The source is at a virtual ground because of the operation of U8.) With Q10 on, the input resistors R41 through R43 and the feedback resistor R44 are connected to the negative input of U8, giving an inverted gain of 0.4 (2/5) to the YTO FREQ ANALOG signal. R41 provides an offset to account for the 321.4 MHz IF offset frequency between the YTF frequency and the YTO frequency (or the harmonic frequency of the YTO for harmonic mixing bands). The polarity of this offse tis reversed for the N = 4+ and N = 5+ sections (see schematic Note 7). YTF OFFSET N2 potentiometer R43 provides a slight adjustment in offset to compensate for hysteresis effects in the YTF.

With Q10 on, CR7 has no effect; but when Q10 and this section are off, CR7 clamps the drain voltage of Q10 at −0.6V. This prevents Q10 from being turned on during part of a span because of the signal from the output of U8 being applied through R44. This diode is not necessary for the N = 1− section.

When the B1, B2, B7 or B8 line is activated (+15V) the N = 1- section is switched in, giving an inverted gain of 0.2 (1/5) to the YTO FREQ ANALOG signal. The B4, B5, and B6 lines respectively switch in the N = 3-, N = 4+, and N = 5+ sections for inverted gains of 0.6, 0.8, and 1.

The YTF CORRECT signal from the Tuning Stabilizer Control Assembly is summed at the input of U8 through R68. This signal is proportional to the frequency change in the YTO caused by the Tickler Coil. The frequency change caused by this signal can be a maximum of ±10.5 MHz.

The output of U8 is the YTF FREQ ANALOG signal, which is a precise voltage proportional to the frequency of the YTF. (Hysteresis effects of the YTF between frequency bands, as compensated for by the YTF OFFSET adjustments N2 through N5, cause a slight discrepancy in this proportionality). The tuning sensitivity at this point is +1 mV per MHz of frequency at the YTF. The YTF FREQ ANALOG signal goes to the YIG Driver Assembly, where it determines the frequency to which the YTF is tuned by controlling the current in the Coil of the YTF, and to the Full Multiband Assembly, where it is used in the Multiband Marker circuit.

Center Frequency Inverter E

The BUFF TUNE signal from the TUNE Buffer is inverted to apply the correct polarity to the Center Frequency N/5 Attenuator. Op amp U1 is connected as an inverting amplifier with unity gain for this signal. The CENTER FREQ CORRECT signal is summed in at this stage. This signal, which comes from the Tuning Stabilizer Control Assembly, is the summation of three signals: those from the FREQ CAL and FINE TUNING controls at the front panel, and the ERROR signal in the stabilized mode. R20 is a booster resistor that supplies additional output current for the stage. The output of the Center Frequency Inverter goes to the Center Frequency N/5 Attenuator.

Center Frequency N/5 Attenuator I

The output from the Center Frequency Inverter goes to the Center Frequency N/5 Attenuator, where it is attenuated and offset an amount selected by the band lines B1 through B8, from the FREQUENCY BAND GHz switch, and the MULTIBAND line. The output of this stage is the CENTER FREQUENCY signal (proportional to the center frequency to which the analyzer is tuned) that goes to the DVM Analog Assembly, which in conjunction with the DVM Digital Assembly provides the FREQUENCY GHz readout.

The Center Frequency N/5 Attenuator has op amp U9 connected as an inverting amplifier, in which different sets of input and feedback resistors are selected by FET switches. There are nine nearly identical sections, which are switched in one at at a time. Six of the sections provide inverted gains of N/5 where N = 1 to 5, and two sections provide inverted gains of N/50 where N = 6 and 10. Offsets equivalent to ±321.4 MHz or ±2050 MHz are summed in depending on the FREQUENCY BAND GHz setting (see schematic Note 7). There is also a Multiband section, which is switched in to read out the marker frequency in the 1.7 — 22 GHz SPAN mode. The operation of the N = 2− section will be described.

With Q18 on, CR13 has no effect; but when Q18 and this section are off, CR13 clamps the drain voltage of Q18 at −0.6V. This prevents Q18 from being turned on during part of a span because of the signal from the output of U9 being applied through R84. (This diode is not necessary for some sections.) CR14 is connected to Q36, which when the MULTIBAND line is activated applies −15V to this diode to keep Q19 off and hence Q18 off in the 1.7 — 22 GHz SPAN mode. The B3 line is activated during part of the multiband span; this keeps the N = 2− section from being turned on when only the Multiband section should be on.

The B1, B2, B4, B5, B6, B7, and B8 lines respectively switch in the N = 1- (2050), N = 1-, N = 3-, N = 4+, N = 5+, N = 6+, and N = 10+ sections for inverted gains of 0.2, 0.2, 0.6, 0.8, 1, 0.12, and 0.2. (For the N = 6+ and N = 10+ sections, this stage has a gain of N/50 instead of N/5, which is the gain for the other sections.) When the Multiband line is activated (+15V), Q36 is turned on to keep all the other sections off. The Multiband section provides a gain and offset such that the output of U9 goes over a range from slightly more than +1.7V to +22V for the full range of the coarse TUNING control.

CF OFF potentiometer R125 is adjusted to zero the offset voltage of U9, eliminating the error that would otherwise be introduced in switching between sections. Q35 is a booster transistor that increases the positive voltage output current capability of the stage. R126 is in series with the positive power input to U9. As the current is increased in R126 approximately 3 mA because of the increased current load at the output of U9, Q35 is slightly turned on, supplying some of the output current. As more current is required, the voltage across R126 increases, and Q35 provides a greater proportion of the output current.

The output of U9 is the CENTER FREQ signal, which is a precise voltage proportional to the center frequency to which the analyzer is tuned in PER DIV mode or proportional to the marker frequency in the FULL BAND, PER DIV F, and 1.7 — 22 GHz SPAN modes. The sensitivity at this point is +1 mV per MHz. The CENTER FREQ signal goes to the DVM Analog Assembly, which with the DVM Digital Assembly measures this voltage and digitally displays it as the FREQUENCY GHz readout. The CENTER FREQ signal also goes to the Full Multiband Assembly, where it is used in the Multiband Marker circuit.

Scans by ARTEK MEDIA =>

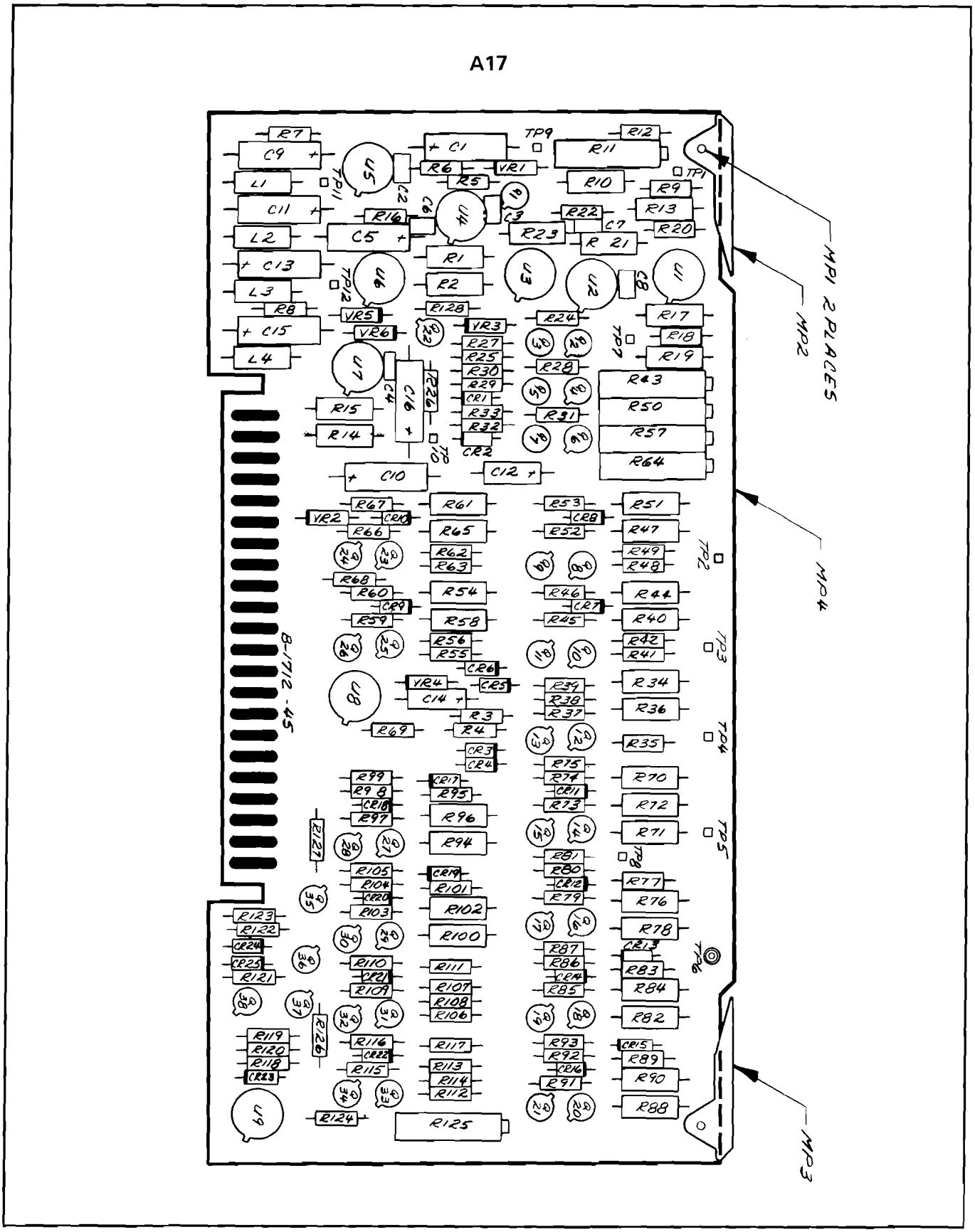

Figure 8-30. Frequency Control Assembly, Component Locations

Scans by ARTEK MEDIA =>

Scans by => ARTEK MEDIA © 2003-2005

A17 FREQUENCY CONTROL ASSEMBLY
08565-60020

P1

PIN	SIGNAL	TO/FROM	FUNCTION BLOCK
1 23	-40V -40V		J J
2 24	-15V -15V		J J
3 25	+15V +15V		J J
4 26	+30V +30V		NOT USED NOT USED
5 27	▽ ▽		J J
6 28	▽1 ▽1		J J
7 29	▽2 ▽2		J J
8 30	-10V REF YTO FREQ ANALOG	A12P1-22, A19P1-8, A18P1-8, A14P1-11 A19P1-30, A18 P1-30, A20P1-30	C G
9 31	+10V REF YTF FREQ ANALOG	A18P1-9, A19P1-9 A2A3P1-5 (9/4) A18P1-31 A19P1-31	B H
10 32	+22.3V REF TUNE	A18P1-10 A2A3P1-4 (9/3) A2A3P1-6 (9/5)	A D
11 33	MAIN ATTEN SWP BUFF TUNE	A15P1-23 A18P1-33	F D
12 34	NC FULL FREQ ANALOG	A18P1-34	G
13 35	YTF CORRECT MULTIBAND FREQ ANALOG	A14P1-24 A18P1-35	H G
14 36	CENTER FREQ CORRECT CENTER FREQ	A14P1-25 A12P1-21 A18P1-36	E I
15 37	B1 NC	A2A1J1-17	A H I
16 38	B2 NC	A2A1J1-15	H I
17 39	B3 FULL	A2A1J1-11 A2A1J1-13	H I G
18 40	B4 MULTIBAND	A2A1J1-7 A2A1J1-9	H I G
19 41	B5 NC	A2A1J1-3	H I
20 42	B6 NC	A2A1J1-2	H I
21 43	B7 NC	A2A1J1-4	H I
22 44	B8 NC	A2A1J1-6	H I

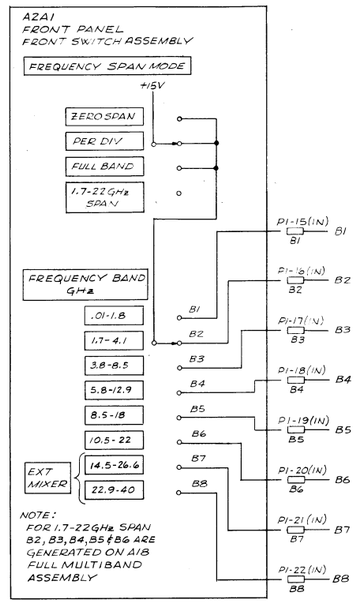

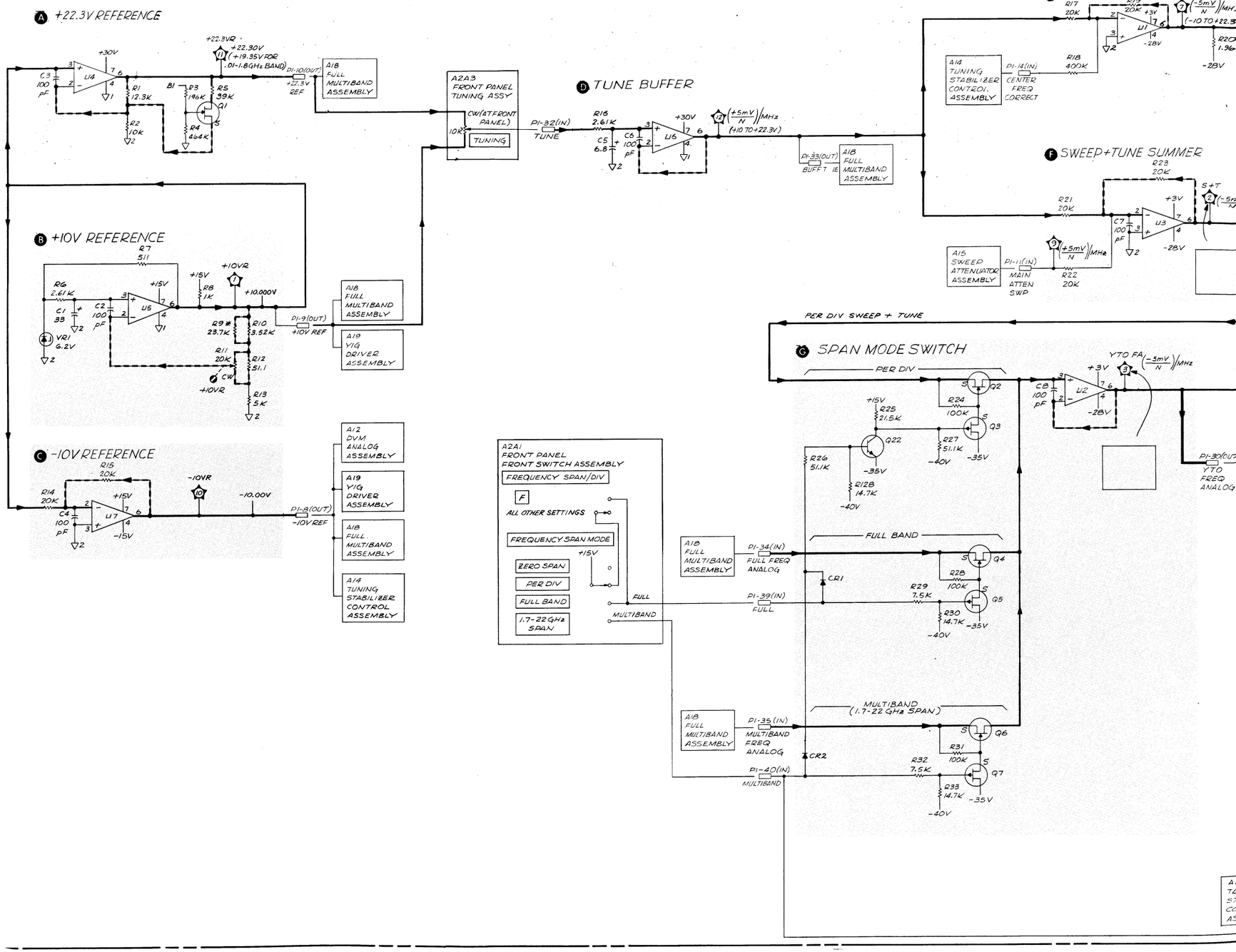

Scans by => ARTEK MEDIA © 2003-2005

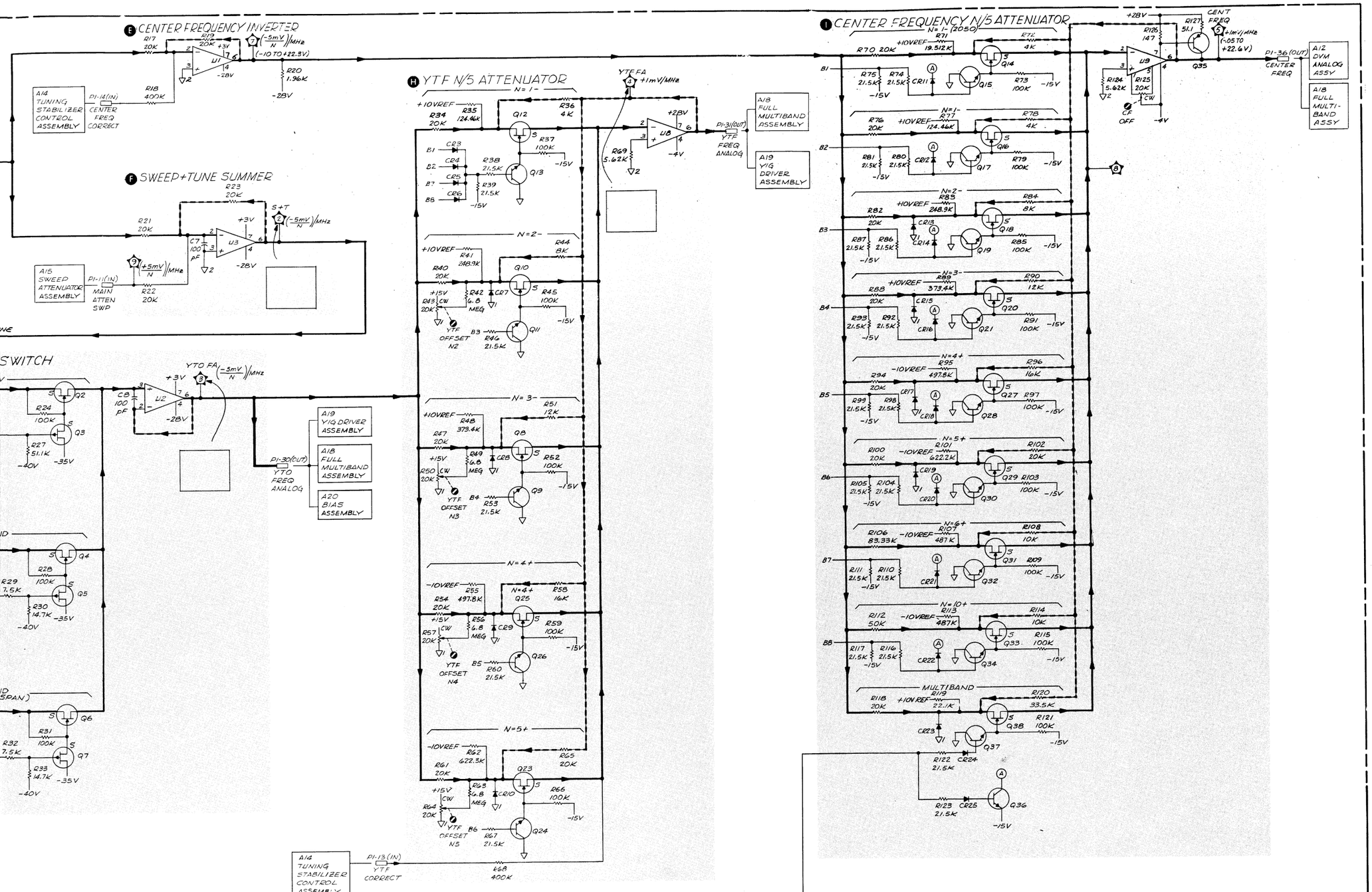

NOTES:

1. REFERENCE DESIGNATORS WITHIN THIS ASSEMBLY ARE ABBREVIATED. FOR COMPLETE DESIGNATOR, PREFIX WITH ASSEMBLY REFERENCE DESIGNATOR.

2. UNLESS OTHERWISE INDICATED
   RESISTANCE IN OHMS (Ω)
   CAPACITANCE IN MICROFARADS (μF)
   INDUCTANCE IN MICROHENRIES (μH)

3. * ASTERISK DENOTES FACTORY SELECTED COMPONENT. NOMINAL VALUE SHOWN.

4. TEST POINT WAVE FORMS ASSUME THE FOLLOWING SETTINGS:
   GREEN (NORMAL) SETTINGS
   FREQUENCY SPAN/DIV: 100 MHz
   FREQUENCY BAND: 1.7-4.1 GHz
   FREQUENCY: 3.000 GHz

5. TEST POINT SIGNAL VOLTAGES ARE REFERENCED TO SIGNAL GROUND ▽2 ON THIS ASSEMBLY. CONNECT THE LOW INPUT OF A DVM TO TP6 FOR MOST ACCURATE DC MEASUREMENTS. SET ANALYZER TO ZERO SPAN TO MEASURE DC VOLTAGES AT TP2, TP3 & TP4.

6. TUNING SENSITIVITIES (IN $\frac{mV}{\mu}$/MHz) ARE FOR THE YTO (1st LO) Nth HARMONIC. THE TUNING SENSITIVITIES FOR THE YTO FUNDAMENTAL, ALWAYS HAS N=1. SEE NOTE 7 FOR HARMONIC NUMBER (N) VERSUS FREQUENCY BAND.

7. FREQUENCY BANDS

FREQUENCY BAND GHz	BAND LINE	HARMONIC NUMBER	SIGN	IF FREQ MHz
.01-1.8	B1	N=1	−	2050
1.7-4.1	B2	N=1	−	321.4
3.8-8.5	B3	N=2	−	321.4
5.8-12.9	B4	N=3	−	321.4
8.5-18	B5	N=4	+	321.4
10.5-22	B6	N=5	+	321.4
14.5-26.6	B7	N=6	+	2050
22.9-40	B8	N=10	+	2050

8. THERE ARE GUARD RING TRACES ON THE PC BOARD WHICH ARE NOT SHOWN ON THE SCHEMATIC. THESE GUARD SENSITIVE CIRCUIT POINTS FROM LEAKAGE CURRENTS.

REFERENCE DESIGNATORS

A17	
LAST USED	NOT USED
C16 CR25 L4 Q38 R128 U9 VR6	

12
A17

Figure 8-31. A17 Frequency Control Assembly, Schematic Diagram

Scans by => ARTEK MEDIA © 2003-2005

SERVICE SHEET 13
A18 FULL MULTIBAND ASSEMBLY, CIRCUIT DESCRIPTION

The Full Multiband Assembly contains circuits for spectrum analyzer operation in the full band modes of FULL BAND and PER DIV F (FREQUENCY SPAN/DIV in F) and also in the multiband mode 1.7 — 22 GHz SPAN. For the full band modes, the SWEEP from the Sweep Generator Assembly is offset and amplified in the FULL Sweep Amplifier to provide the FULL FREQ ANALOG signal to the Frequency Control Assembly. There is also circuitry to control the Auto Sweep Time (AST) and to generate a marker for the full band modes.

In the multiband mode, the SWEEP ramp from the Sweep Generator Assembly is offset and amplified. Band Edge Comparators compare this ramp against fixed voltages that control the band transitions. The frequency band lines are sequentially switched by Band Logic circuits to display all five frequency ranges on a single sweep. The SWEEP ramp goes through a switched gain 5/N Amplifier, controlled by the frequency band lines, which then provides the MULTIBAND FREQ ANALOG signal to the Frequency Control Assembly. The frequency band lines also go to other assemblies to control mixer diode bias, flatness gain compensation, and the YTF N/5 Attenuator. There is also circuitry to generate the multiband marker. In PER DIV mode, there is an Over Sweep blanking circuit that blanks the CRT trace when the frequency is swept beyond the frequency band edges.

Sweep + Offset Amplifier (A)

This circuit amplifies and offsets a sweep ramp to produce a ramp for the multiband 1.7 — 22 GHz SPAN. The SWEEP ramp input (−5V to +5V) comes from the Sweep Generator Assembly. This signal goes to the negative input of op amp U4B. A reference voltage (+10V REF) froh the Frequency Control Assembly also goes to the negative input of U4B, which is connected as an inverting amplifier with an inverted gain of 2.1 for sweep and 1.21 for the offset. When the MULTIBAND line is not activated (open circuit at the front panel), −15V through R3 and CR2 is applied to the negative input of U4B, which offsets the multiband ramp sufficiently so that none of the Band Edge Comparators will be driven positive. When the 1.7 — 22 GHz SPAN mode is selected, the MULTIBAND line is activated (+15V), CR2 is reverse biased, and R3 causes no offset. Op amp U3A is a unity gain inverting amplifier. Its output is the MB RAMP, which has a voltage range of +1.7V to +22.5V (see Figure 8-32).

Band Edge Comparators (B)

This circuit consists of four comparators that sequentially go positive at the frequency band switching points of the multiband span. The +22.3V REF voltage from the Frequency Control Assembly is applied to the resistive voltage divider consisting of R7 through R11. Voltages from this divider go to the negative inputs of op amps U1A, U1B, U2A, and U2B, which are connected as voltage comparators. The multiband sweep, MB RAMP, from the output of U3A is applied to the positive inputs of U1A, U1B, U2A, and U2B. The output of each comparator is approximately −3V when the negative input is at a lower voltage than the positive input. When the voltage at the positive input exceeds that at the negative input, the output will be approximately +24V. The op amps U1B, U1A, U2B, and U2A go positive in sequence during a single sweep ramp. The output of each remains positive until the next sweep ramp is started (see Figure 8-32). The comparator outputs go to both the Band Logic and the Stop Sweep triggers.

Band Logic (C)

The outputs of the Band Edge Comparators (U2A, U2B, U1A, and U1B) drive the Band Logic transistors, where five band lines (B2 through B6) are activated in sequence during one multiband sweep (see Figure 8-32). When the outputs of all comparators are negative, Band 2 transistor Q5 is turned on providing +14V on line B2. The emitter of Q5 is at +14V only when the MULTIBAND line is activated (+15V); otherwise it is open. When the output of U1B goes positive (+24V), Q5 is turned off and the inverter Q24 is turned off, which turns on Q4 to provide +15V on line B3. At the next band edge, when U1A has a positive output, Q4 is turned off by this voltage applied through CR8. Q23 is also turned off, which turns on Q3 to provide +15V on line B4. The circuits for Band 5 and Band 6 work in the same manner. In the multiband mode, the FREQUENCY BAND GHz switch on the front panel is disconnected and the band lines activated in this circuit go to other assemblies to control mixer diode bias, flatness gain compensation, and the N/5 Attenuaor.

Stop Sweep Triggers (E)

The Band Edge Comparaors drive the Stop Sweep Triggers, which stop the sweep for approximately 15 ms while the spectrum analyzer is switching from one band to the next (see Figure 8-32). Since there are four identical Stop Sweep Triggers, the operation of only one of these will be described. When the output of U2A goes from negative to positive, this transition is coupled through C1 and R31 to the base of Q21, momentarily turning it on. This shunts the collector of Q21 to ground, which turns on Q25. When Q25 is on, +25V is applied through CR14 to the Sweep Generator Assembly, where this STOP SWP signal stops the sweep at its current level and holds it there until the line is opened. The output from Q25 is also ORed into the OVER SWP BLANK line through CR13 so that the CRT is blanked while the sweep is stopped.

5/N Amplifier (F)

The multiband sweep, MB RAMP (+1.7V to +22.5V) from the Sweep + Offset Amplifier circuit goes to the 5/N Amplifier, where it is amplified and offset an amount selected by the band lines B2 through B6, which are activated in the Band Logic circuit. These band lines are activated in sequence during a single sweep. The output of this stage is the MULTIBAND FREQ ANALOG signal (proportional to the YTO frequency) that goes to the Frequency Control Assembly, where it is switched to the YTO (see Figure 8-32). The YTO FREQ ANALOG signal then goes to the YIG Driver Assembly to drive the YTO Main Coil. The MULTIBAND FREQ ANALOG signal has a level of −5mV per MHz divided by the harmonic number N (see schematic Notes 5 and 6).

The 5/N Amplifier circuit has op amp U4A connected as an inverting amplifier in which different sets of input and feedback resistors are selected by FET switches. There are five nearly identical sections, which are switched in one at a time. They provide inverted gains of 5/N, where N = 1 to 5. The operation of the N = 5 section will be described. When the B6 line is not activated (open circuit at the source in the Band Logic circuit), Q16 has approximately −15V at both the base and the emitter. This is at the gate of Q15 to keep it turned off. There is a pull-down resistor to −15V for the B6 line, which is located in the Frequency Control Assembly. When the B6 line is activated (+15V), Q16 is turned on with the base at approximately +0.6V and the emitter at 0V, connecting the gate of Q15 to ground. Now Q15 is no longer reverse biased by R45 but is turned on because the source and gate are at the same potential. (The source is at a virtual ground because of the operation of U4A.)

With Q15 on, CR15 has no effect; but when Q15 and this section are off, CR15 clamps the drain voltage of Q9 at −0.6V. This prevents Q15 from being turned on during part of a span because of the signal from the output of U4A being applied through R42. This diode is not necessary for the N = 1 section. With Q15 on, the input resistors R41 and R43 and the feedback resistor R42 are connected to the negative input U4A, giving an inverted gain of 1 (5/5) to the sweep ramp. R43 provides an offset to account for the 321.4 MHz. It also provides a slight overlap of frequencies between bands to insure that there will be no gaps.

When the B5 line is activated (+14V) the N = 4 section is switched in, giving an inverted gain of 1.25 (5/4) to the sweep. The B4, B3, and B2 lines respectively switch in the N = 3, N = 2, and N = 1 sections for inverted gains of 1.67, 2.5 and 5.

Oversweep Blanking (D)

This circuit provides a blanking signal which goes to the Z Axis Amplifier Assembly and blanks the CRT when the frequency is swept more than a slight margin beyond the band edges. Nominally it blanks the CRT when the sweep exceeds the frequency range of the coarse TUNING control, which is slightly larger than the specified band edges. The YTO FREQ ANALOG signal from the Frequency Control Assembly is applied to the negative input of U3B, which is connected as an inverting unity gain amplifier. The output from U3B goes to the positive input of U7A and to the negative input of U7B, which are op amps connected as comparators. Reference voltage +10V REF is applied to the positive input of U7B and reference voltage +22.3V REF to the negative input of U7A. These two voltages are the voltages at the ends of

Scans by => ARTEK MEDIA © 2003-2005

the coarse TUNING range. For a sweep plus tune voltage at output of U3B between +10V and +22.3V, the outputs of both U7A and U7B are negative (about −3V) and are isolated from the OVER SWP BLANK line by CR11 and CR12. If the output of U3B is less than +10V, U7B goes positive to about +24V for the part of the frequency span. The output of U7B goes through CR12 and R30 to the Z Axis Amplifier Assembly, blanking the CRT. If the output of U3B is greater than +22.3V, U7A goes positive to about +24V for that portion of the frequency span. The output of U7A goes through CR11 and R30 to the Z Axis Amplifier Assembly to blank the CRT. For narrow frequency spans (1 kHz/DIV to 2 MHz(DIV) and for the ZERO SPAN mode, the NARROW line is activated (+15V), which turns on Q2 and shunts the OVER SWP BLANK line to ground. This disables the oversweep blank function for narrow frequency spans. For wide frequency spans, the blanking is never for more than approximately half the CRT trace.

Full Sweep Amplifier H

This SWEEP ramp from the Sweep Generator Assembly goes to this stage, where it is amplified and offset an amount as selected by the band lines B1 through B8 from the FREQUENCY BAND GHz switch. The output of this stage is the FULL FREQ ANALOG signal (proportional to the YTO frequency) that goes to the Frequency Control Assembly, where it is switched to the YTO FREQ ANALOG line. The YTO FREQ ANALOG signal then goes to the YIG Driver Assembly to drive the YTO Main Coil.

This stage has op amp U8A connected as an inverting amplifier in which different sets of input and feedback resistors are selected by FET switches. There are three nearly identical sections, which are switched in one at a time. These sections are similar to those in the 5/N Amplifier circuit. (Refer to that circuit for operation of a typical section.) When the B1 line is activated (+15V), the B1 section is switched in, giving an inverted gain of 0.91 for the sweep and 1.47 for +10V REF. When the B2, B3, B4, or B5 line is activated (+15V), the corresponding section is switched in, giving an inverted gain of 1.22 for the sweep and 1.61 for +10V REF. When the B6, B7 or B8 line is activated (+15V), the corresponding section is switched in, giving a gain of 1.16 for the sweep and 1.59 for +10V REF. The FULL FREQ ANALOG output is −5 mV per MHz divided by the harmonic number N (see schematic Notes 5 and 6).

AST Full Span G

With the SWEEP TIME/DIV swich set to AUTO, the sweep time is automatically controlled by the Auto Sweep Time (AST) circuits. The sweep time is varied as a function of RESOLUTION BW, FREQUENCY SPAN/DIV, and VIDEO FILTER settings to maintain absolute amplitude calibration. In the PER DIV F mode, this circuit controls the sweep time as a function of the FREQUENCY BAND GHz setting. In the FULL BAND mode, the circuit is switched in but has no effect on sweep time because the RESOLUTION BW and VIDEO FILTER are fixed respectively at 3 MHz and .003. Under these conditions the sweep time is determined solely by the Current Limit circuit in the Sweep Generator Assembly.

In FULL BAND or PER DIV F, the FULL line is activated (+15V), and this signal through CR39 turns on Q33 to connect CR21, CR22, CR23, CR24, CR25, and CR26 to ground.

There are six identical AST switches for the bands B1 through B6 (see schematic Note 6). The operation of the Band 6 AST circuit will be described. When Band 6 is selected (10.5 — 22 GHz) by the FREQUENCY BAND GHz switch, the B6 line is activated (+15V), which turns on Q27 to connect the Band 6 AST resistor R68 to ground through CR21 and Q33. The other end of R68 is connected through CR19 to the AST BW-SW line. Switching the AST resistors in controls the current in the AST BW-FS line, which in turn controls the sweep time of the sweep ramp generated in the Sweep Generator Assembly. The lower the resistance, the faster the sweep speed.

Multiband Marker I

This circuit provides the marker for the multiband 1.7 — 22 GHz SPAN mode. When not in 1.7 — 22 GHz SPAN, the MULTIBAND line is not activated, and −15V through R100 and CR35 is applied to the negative input of U5A, which offsets the ramp sufficiently to disable the Multiband marker. When the MULTIBAND line is activated (+15V), CR35 is reverse biased, and R100 causes no offset. Op amp U8B is an inverting unity gain amplifier that inverts the YTF FREQ ANALOG signal from the Frequency Control Assembly. The signal is proportional to the frequency to which the spectrum analyzer is swept in the multiband mode (−1 mV/MHz at output of U8B). Op amp U5A is an inverting amplifier with a gain of 50. The CENT FREQ line from the Frequency Control Assembly is proportional to the FREQUENCY GHz readout (+1 mV/MHz). The YTF FREQ ANALOG and CENT FREQ voltages are summed through R98 and R99 at the negative input of U5A. When the two inputs are near the same absolute level, the output of U5A is a positive-going ramp. The output of op amp U5B, an inverting unity gain amplifier, is a negative-going ramp when the output of U5A is a positive-going ramp. As long as the output of U5B is greater than that of U5A, the output at the junction of CR36 and CR37 will be a negative-going ramp from U5B. When the output of U5B is less than that of U5A, the output at the junction of CR36 and CR37 will be a positive-going ramp from U5A. This generates a positive V-shaped pulse with its apex at 0V. R104 and R105 offset the "V" pulse so that its apex is at approximately −6V. CR38 allows this marker to be ORed with the Full Marker. The MARKER pulse generated goes to the Video Assembly, where it is added to the vertical signal to produce a "V" notch marker on the CRT trace at the frequency corresponding to that on the FREQUENCY GHz display.

Full Marker J

This circuit provides the marker in the full span modes of FULL BAND and PER DIV F. When not in a full span mode, the FULL line is not activated and −15V through R108 and CR40 is applied to the negative input of U6A, which offsets the ramp sufficiently to disable the FULL marker. When in a full span mode, the FULL line is activated (+15V), CR40 is reverse biased, and R108 causes no offset. Op amp U6A is an inverting amplifier with a gain of 50. The BUFF TUNE signal from the Frequency Control Assembly is proportional to the FREQUENCY GHz readout and also to the center frequency in PER DIV mode (+5 mV/MHz). The FULL FREQ ANALOG signal is proportional to the frequency to which the spectrum analyzer is swept in (−5 mV/MHz). The BUFF TUNE and FULL FREQ ANALOG voltages are summed through R106 and R107 at the negative input of U6A. When the two inputs are near the same absolute level, the output of U6A will be a positive-going ramp. The output of op amp U6B, an inverting unity gain amplifier, is a negative-going ramp when the output of U6A is a positive-going ramp taken from U6B. When the output of U6B is less than that of U6A, the output at the junction of CR41 and CR42 will be a positive-going ramp taken from U6A. This generates a positive V-shaped pulse with its apex at 0V. R112 and R113 offset this "V" pulse so that its apex is at approximately −6V. CR43 allows this marker to be ORed with the Multiband Marker. The MARKER pulse generated goes to the Video Assembly, where it is added to the vertical signal to produce a "V" notch marker on the CRT trace at the frequency corresponding to that on the FREQUENCY GHz display.

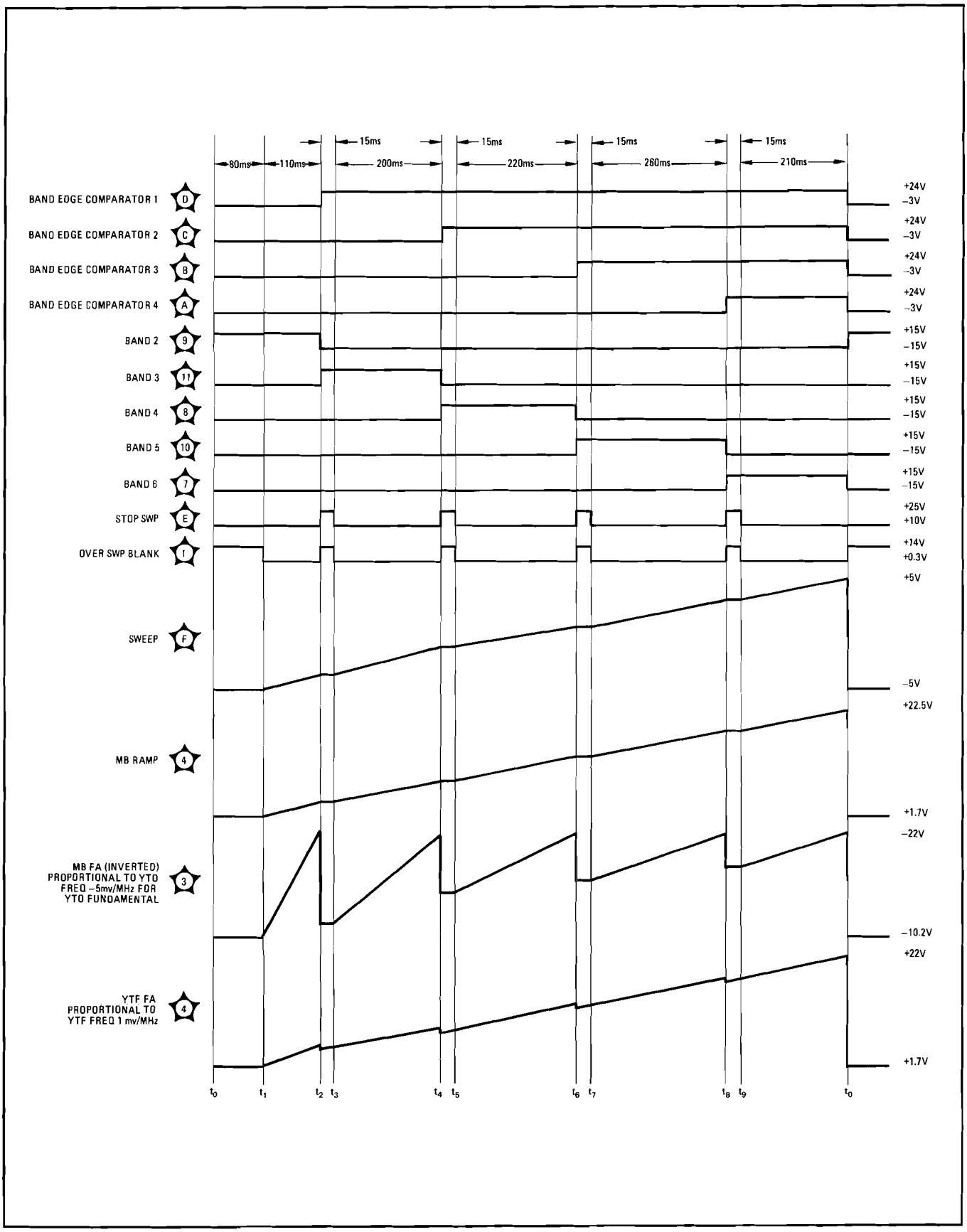

Figure 8-32. Full Multiband Assembly, Timing Diagram

Scans by ARTEK MEDIA =>

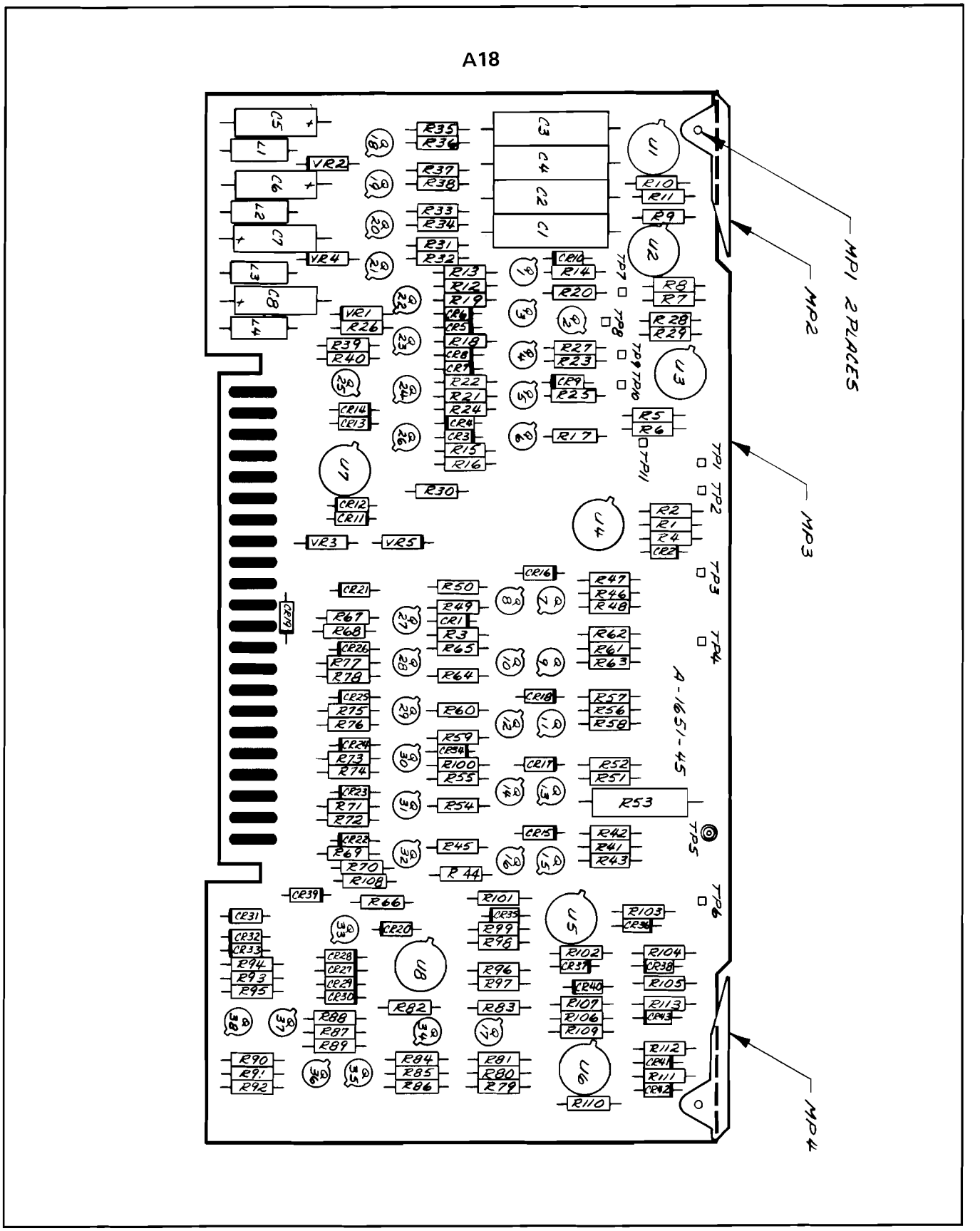

Figure 8-33. A18 Full Multiband Assembly, Component Locations

Scans by ARTEK MEDIA =>

Scans by => ARTEK MEDIA © 2003-2005

A18 FULL MULTIBAND ASSEMBLY
08565-60021

P1

PIN	SIGNAL	TO/FROM	FUNCTION
1 23	-40V -40V		K K
2 24	-15V -15V		K K
3 25	+15V +15V		K K
4 26	+30V +30V		K K
5 27	▽ ▽		K K
6 28	▽1 ▽1		K K
7 29	▽2 ▽2		NOT USED NOT USED
8 30	-10V REF YTO FREQ ANALOG	A17 P1-8 A17 P1-30	F D
9 31	+10V REF YTF FREQ ANALOG	A17 P1-9 A17 P1-31	A F H I
10 32	+22.3V REF SWEEP	A17 P1-10 A2A1 J2-27	B A
11 33	AST BW-F5 BUFF TUNE	A16 P1-35 A17 P1-33	G J
12 34	NC FULL FREQ ANALOG	A17 P1-34	H
13 35	NC MULTIBAND FREQ ANALOG	A17 P1-35	F
14 36	NC CENTER FREQ	A17 P1-36	I
15 37	B1 MARKER	A2A1 J1-17 A21 P1-12	G H I
16 38	B2 OVER SWP BLANK	A2A1 J1-15 A4-P1-5	C F G H D
17 39	B3 FULL	A2A1 J1-11 A2A1 J1-39	C F G H J
18 40	B4 MULTIBAND	A2A1 J1-7 A2A1 J1-9	C F G H A I
19 41	B5 NC	A2A1J1-3	C F G H
20 42	B6 NARROW	A2A1 J1-6 A2A21 J1-1	C F G H D
21 43	B7 STOP SWP	A2A1 J1-4 A16 P2-11 REAR PNL J2-7 (95)	H E
22 44	B8 NC	A2A1 J1-6	H

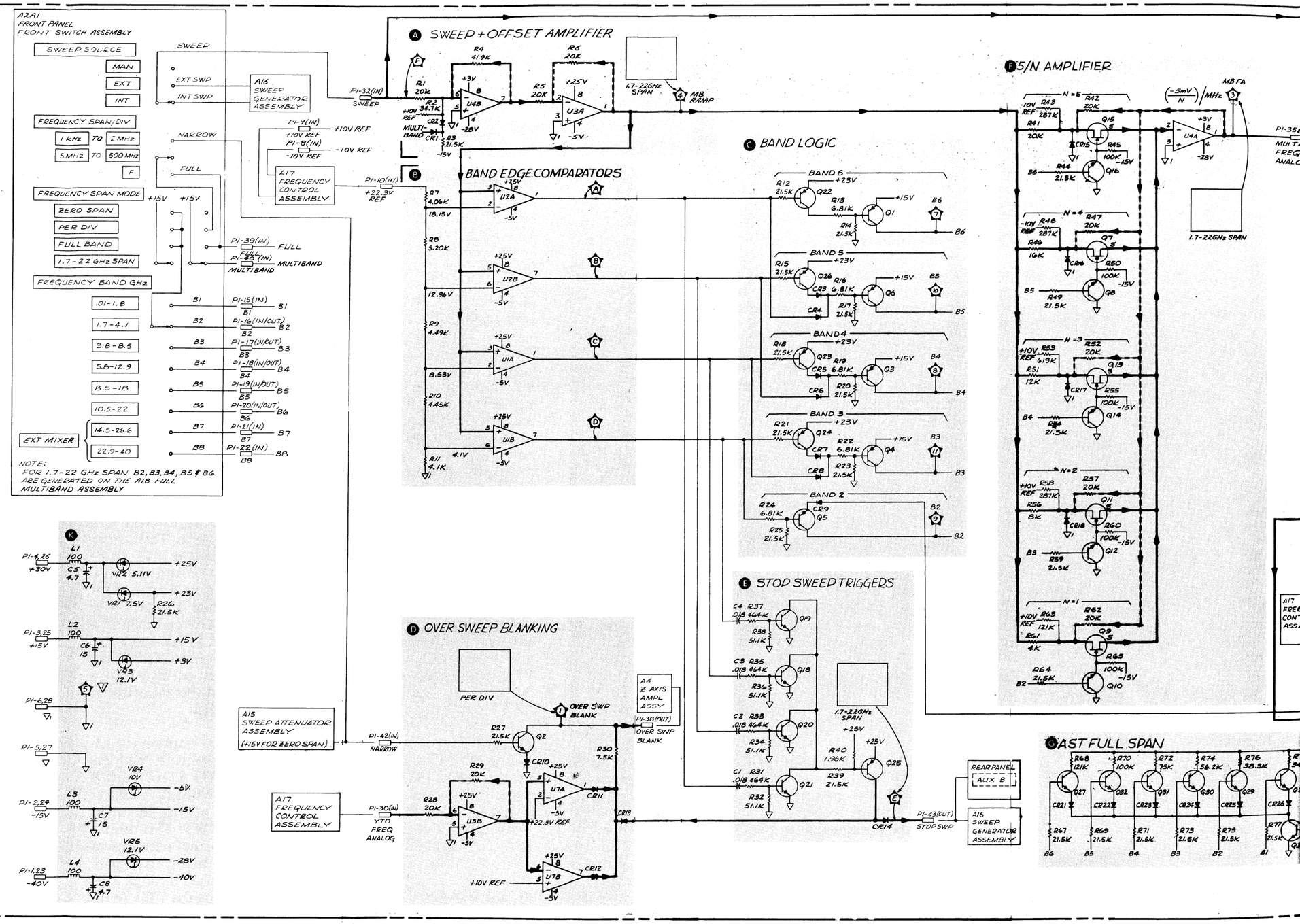

SERIAL PREFIX: 1712A APRIL 15, 1977

Scans by => ARTEK MEDIA © 2003-2005

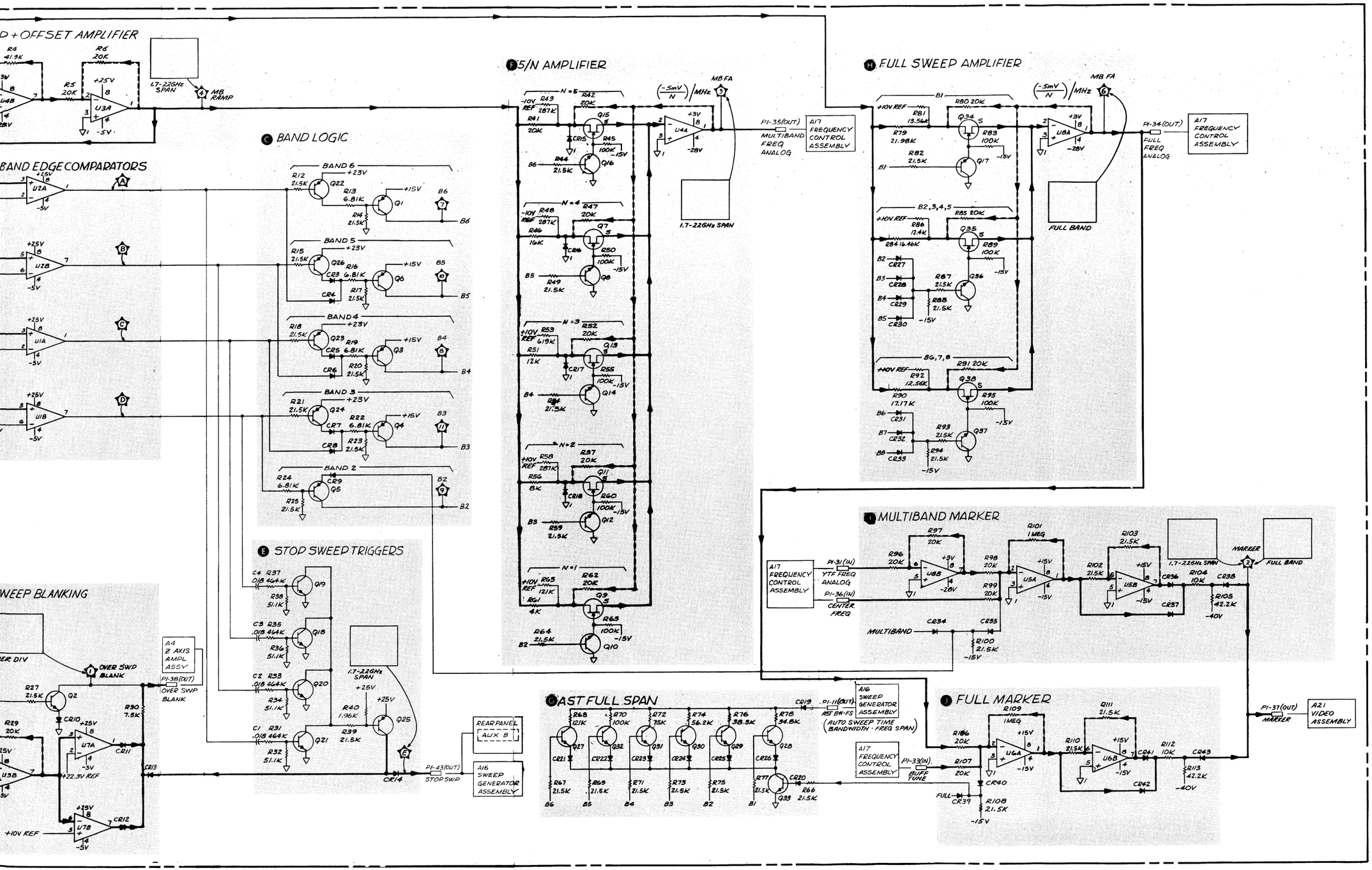

NOTES

1. REFERENCE DESIGNATORS WITHIN THIS ASSEMBLY ARE ABBREVIATED. FOR COMPLETE DESIGNATOR, PREFIX WITH ASSEMBLY REFERENCE DESIGNATOR.
2. UNLESS OTHERWISE INDICATED:
   RESISTANCE IN OHMS (Ω)
   CAPACITANCE IN MICROFARADS (μF)
   INDUCTANCE IN MICROHENRIES (μH)
3. TEST POINT WAVEFORMS ASSUME FOLLOWING SETTINGS
   GREEN (NORMAL) SETTINGS
   FREQUENCY SPAN/DIV: 100MHz
   FREQUENCY BAND: 1.7-4.1GHz
   FREQUENCY: 3.800GHz
   FREQUENCY SPAN MODE: AS INDICATED
4. TEST POINT SIGNAL VOLTAGES ARE REFERENCED TO SIGNAL GROUND ▽1 ON THIS ASSEMBLY. CONNECT THE LOW INPUT OF A DVM TO TP5 FOR MOST ACCURATE DC MEASUREMENTS. SET ANALYZER TO MAN SWEEP SOURCE TO MEASURE DC VOLTAGES AT TP3, TP4, AND TP6.
5. TUNING SENSITIVITIES (IN $\frac{mV}{N}$/MHz) ARE FOR THE YTO (1ST LO) N^{TH} HARMONIC. THE TUNING SENSITIVITIES FOR THE YTO FUNDAMENTAL, ALWAYS HAS N=1. SEE NOTE 6 FOR HARMONIC NUMBER (N) VERSUS FREQUENCY BAND.
6. FREQUENCY BANDS

FREQUENCY BAND GHz	BAND LINE	HARMONIC NUMBER	SIGN	IF FREQ MHz
.01-1.8	B1	N=1	−	2050
1.7-4.1	B2	N=1	−	321.4
3.8-8.5	B3	N=2	−	321.4
5.8-12.9	B4	N=3	−	321.4
8.5-18	B5	N=4	+	321.4
10.5-22	B6	N=5	+	321.4
14.5-26.6	B7	N=6	+	2050
22.9-40	B8	N=10	+	2050

7. THERE ARE GUARD RING TRACES ON THE PC BOARD WHICH ARE NOT SHOWN ON THE SCHEMATIC. THESE GUARD SENSITIVE CIRCUIT POINTS FROM LEAKAGE CURRENTS.

REFERENCE DESIGNATORS

A18	
LAST USED	NOT USED
C8	
CR43	
L4	
Q38	
R113	
VR5	

13
A18

Figure 8-34. A18 Full Multiband Assembly, Schematic Diagram

Scans by => ARTEK MEDIA © 2003-2005

SERVICE SHEET 14
A19 YIG DRIVER ASSEMBLY, CIRCUIT DESCRIPTION

The YIG Driver Assembly contains circuits that tune the YIG-Tuned Oscillator (YTO) over the frequency range from 2.00 GHz to 4.46 GHz. Tuning is accomplished by controlling the current (which is proportional to frequency) in the YTO Main Coil. Also in this assembly are the circuits that tune the YIG-Tuned Filter (YTF) preselector over the frequency range from 1.7 GHz to 22 GHz. Tuning is accomplished by controlling the current (which is proportional to frequency) in the YTF coil. E1 through E14 are insulated terminals that are used to reduce leakage currents to sensitive signal paths.

– 20V Reference Supply (A)

Op amp U1 is connected as a non-inverting amplifier with a gain of 2. A reference voltage (−10V REF) from the Frequency Control Assembly is applied to the positive input of U1, providing a −20.0V reference voltge at the output.

YTO Main Coil Predriver (B)

The main input to this stage is the YTO FREQ ANALOG signal which comes from the Frequency Control Assembly. This is a precise voltage equal to −5 mV per MHz for fundamental (N = 1) mixing mode. For harmonic mixing bands, this voltage is divided by the harmonic number N (see schematic Notes 5 and 6). For narrow frequency spans (1 kHz/DIV to 2 MHz/DIV) and for ZERO SPAN mode, the voltage from the TUNING control determines the YTO FREQ ANALOG voltage. For wide frequency spans (5 MHz/DIV to 500 MHz/DIV), the attenuated sweep ramp is summed with the voltage from the TUNING control in the Frequency Control Assembly to produce the YTO FREQ ANALOG voltage. For the full band modes (FULL BAND and PER DIV F) and for the multiband mode (1.7 — 22 GHz SPAN), the FULL BAND FREQ ANALOG or the MULTIBAND FREQ ANALOG voltage is generated in the Full Multiband Assembly and switched to the YTO FREQ ANALOG line in the Frequency Control Assembly. The YTO FREQ ANALOG signal goes through R8, R9, and R10 to the negative input of op amp U3. This stage is an inverting amplifier with a gain of 0.5 for the YTO FREQ ANALOG voltage, with the YTO GAIN adjustment R8 at its nominal position.

A reference voltage (−20V REF) from U1 is applied through the voltage divider R4 and R11 to put −10.25V at the positive input of U3. The −20V REF also goes through R5, R6, and R7 to the negative input of U3, where it cancels out most of the offset that was introduced at the positive input. YTO OFFSET adjustment R5 is adjusted to tune the YTO to 2.05 GHz when −10.25V is applied to the YTO FREQ ANALOG input. The negative input of U3 is at a virtual potential equal to the voltage at the positive input of U3 (i.e., −10.25V) because of the operation of the op amp. Thus with the YTO FREQ ANALOG voltage at −10.25V, the YTO GAIN adjustment R8 has no effect because there is no current through it. This makes the YTO GAIN adjustment non-interacting with the YTO OFFSET adjustment when the latter is first adjusted with the YTO FREQ ANALOG voltage at −10.25V. The YTO GAIN adjustment is then adjusted to tune the YTO to 4.4 GHz when −22V is at the YTO FREQ ANALOG input. C1 is placed across the inut of U3 to reduce its susceptibility to external RF interference.

YTF Coil Predriver (C)

The main input to this stage is the YTF FREQ ANALOG signal that comes from the Frequency Control Assembly. This is a precise voltage equal to +1 mV per MHz. This voltage varies from +1.7V to +22V as the YTF is tuned from 1.7 to 22 GHz. The YTF FREQ ANALOG signal goes through R17, R18, and R19, and also through R20 and C2 (a speed-up circuit to compensate for some of the magnetic delay in the YTF coil) to the negative input of op amp U4. This stage is an inverting amplifier with a gain of 0.9 for the YTF FREQ ANALOG voltage when the YTF GAIN adjustment R17 is at its nominal position.

The +10V reference voltage (+10V REF) from the Frequency Control Assembly is applied through the voltage divider R13 and R25 to put +2.00V at the positive input of U4. The +10V REF also goes through R14, R15, and R16 to the negative input of U4, where it cancels out most of the offset that was introduced at the positive input. The YTF OFFSET adjustment R14 is adjusted to tune the YTF to 2.00 GHz when +2.00V is at the YTF FREQ ANALOG input. The negative input of U4 is at a virtual potential equal to the voltage at the positive input of U4 (i.e., +2.00V), because of the operation of the op amp. Thus with the YTF FREQ ANALOG voltage at +2.00V, the YTF GAIN adjustment R17 has no effect because there is no current through it. This makes the YTF GAIN adjustment non-interacting with the YTF OFFSET adjustment when the latter is first adjusted with the YTF FREQ ANALOG voltage at +2.00V. The YTF GAIN adjustment is then adjusted to tune the YTF to 10 GHz when +10.00V is at the YTF FREQ ANALOG input. The YTF GAIN and OFFSET adjustments are made with the PRESELECTOR PEAK control at mid-position. This control allows the tracking of the YTF to the YTO to be adjusted at the front panel for the best performance at the particular signal frequencies of interest. It adjusts the offset of the YTF over a range of approximately ±40 MHz.

The YTF Track switch S1 is switched to the Test position for adjusting the YTF OFFSET and YTF GAIN adjustments. With the spectrum analyzer in ZERO SPAN and AUTO STABILIZER OFF, a signal is applied to the analyzer input. When the analyzer is tuned to that frequency, the YTF passband at that particular frequency will be swept and displayed on the CRT. This display has a calibration of about 20 MHz/DIV (the actual passband of the YTF is the reverse of that seen on the CRT). In the TEST position of S1, a sweep ramp of −5V to +5V is applied through R21, S1, and R24 to the negative input of U4, sweeping the YTF. In the NORM position of S1, R22 is connected from R24 to ground, thus presenting the same resistance to the negative input of U4 in NORM as in TEST. This is done so there will be no offset difference between the two settings. The YTF MOD input through C3 enables the YTF offset to be modulated for the test purpose of adjusting and checking tracking and amplitude flatness.

YTO Main Coil Driver (D)

The signal from the output of the YTO Main Coil Predriver is applied to op amp U2 of the YTO Main Coil Driver circuit. This driver is basically an accurate constant current source putting a current through the Main Coil of the YTO that is proportional to the input voltage to this stage. Q1, Q2, and Q3 are connected in a three-transistor Darlington configuration to provide the necessary current capability and current source accuracy.

The current through the sense resistor R34, which differs from the current in the Main Coil by only a small amount, produces a voltage across R34 which is sensed differentially. At the transistor side of R34 the signal is applied as negative feedback through R30 to the negative input of U2. A slight amount of positive feedack from the ground side of R34 is applied through R29 to the positive input of U2. This stage has a voltage-to-current conversion of 104 mV/mA. CR1 and VR3 clamp the YTO COIL + voltage during retrace at approximately −125V (−83V across the YTO Main Coil) to provide flyback voltage limiting for Q1, Q2, and Q3. C4 is placed across the input of U4 to reduce its susceptibility to external RF interference.

For narrow frequency spans (1 kHz/DIV to 2 MHz/DIV) and for ZERO SPAN mode, the NARROW line is activated (+14V), turning on relay K1, which shunts R36 to put C5, C6, and C7 (along with the series resistor R35) across the YTO Main Coil. This filter reduces the noise applied to the Main Coil when it is not being swept. R36 allows C5, C6, and C7 to be charged when the relay is open so that there will not be a large jump in frequency when it is closed. CR8 provides flyback voltage clamping of the relay coil.

YTF Coil Driver (E)

The signal from the output of the YTF Coil Predriver is applied to op amp U5 of the YTF Coil Driver. This driver is basically an accurate constant current source putting a current through the YTF Coil that is proportional to the input voltage to this stage. Q4, Q5, and Q6 are connected in a three-transistor Darlington configuration to provide the necessary current capability and current source accuracy.

The current through the sense resistor R59, which differs from the current in the coil by only a small amount, produces a voltage across R59 which is sensed differentially. At the transistor side of R59 the signal is applied as negative feedback through R55 to the negative input of U5. A slight amount of positive feedback from the ground side of R59 is applied through R54 to the positive input of U5. This stage has a voltage-to-current conversion of 67.7 mV/mA. CR7 and VR4 clamp the YTF voltage during retrace at approximately −125V (−83V across the YTF Coil), providing flyback voltage limiting for Q4, Q5, and Q6.

A18 Full Multiband Assembly
SERVICE SHEET 13

The current versus frequency of the YTF becomes non-linear enough above about 10 GHz to require compensation. The Linearity Correction circuit providing piecewise linearity correction is in five segments. Since the same circuit configurations used for each segment, only the operation for the YTF LIN 18 adjustment will be described. The YTF LIN 18 adjustment R45 is adjusted to track the YTF to the YTO at 18 GHz. The breakpoint of this segment, where it begins to have an effect, is approximately at 16 GHz. R43 and R44 form a voltage divider with a voltage of −4.7V at their junction. When the YTF is tuned to 16 GHz, the voltage at TP8 is −5.3V. This is one diode drop (0.6V) lower than the voltage at the junction of R43 and R44, which (because of CR4) is just enough to start current through R45. R45 and R43 shunt the sense resistor R59, raising the gain of the stage for frequencies above approximately 16 GHz and compensating for the lower tuning sensitivity of the YTF at higher frequencies. For frequencies below 16 GHz, CR4 is reverse biased, and the YTF LIN 18 circuit has no effect.

Scans by ARTEK MEDIA =>

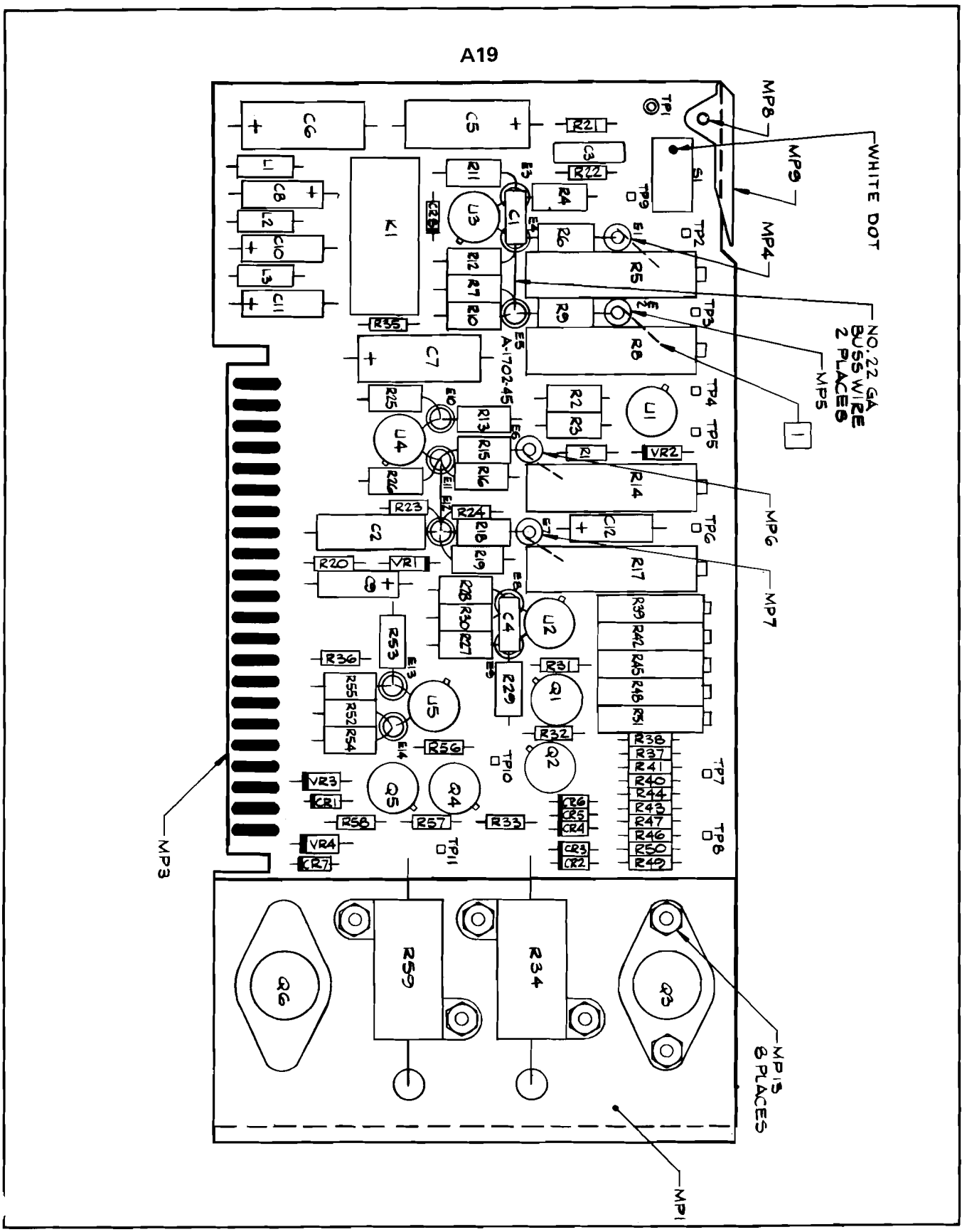

Figure 8-35. A19 YIG Driver Assembly, Component Locations

Scans by ARTEK MEDIA =>

Scans by => ARTEK MEDIA © 2003-2005

A19 YIG DRIVER ASSEMBLY
08565-60022

P1

PIN	SIGNAL	TO/FROM	FUNCTION BLOCK
1 23	−40V −40V		F F
2 24	−15V −15V		F F
3 25	+15V +15V		F F
4 26	+30V +30V		NOT USED NOT USED
5 27	▽ ▽		F F
6 28	▽1 ▽1		F F
7 29	▽2 ▽2		F F
8 30	−10V REF YTO FREQ ANALOG	A17 P1-8 A17 P1-30	A B
9 31	+10V REF YTF FREQ ANALOG	A17 P1-9 A17 P1-31	C C
10 32	YTO RS GND YTO RS GND	GND GND	D D
11 33	YTF RS GND YTF RS GND	GND GND	E E
12 34	PRESELECT PEAK NC	A2A1J2-20	C
13 35	SWEEP NC	A16 P1-9	C
14 36	YTF MOD NC	REAR PNL J2-6 (904)	C
15 37	NARROW NC	A2A1J1-1 A15 P1-30	D
16 38	NC NC		
17 39	YTO COIL FILTER+ YTO COIL FILTER+	A31J1-2 (946) A31J1-2 (946)	D D
18 40	YTO COIL+ YTO COIL+	A31J1-1 (936) A31J1-1 (936)	D D
19 41	YTO COIL− YTO COIL−	A31J1-9 (7) A31J1-9 (7)	D D
20 42	YTO COIL FILTER− YTO COIL FILTER−	A31J1-8 (945) A31J1-8 (945)	D D
21 43	YTF COIL+ YTF COIL+	A32 +TERM (7) A32 +TERM (7)	E E
22 44	YTF COIL− YTF COIL−	A32 −TERM (7) A32 −TERM (7)	E E

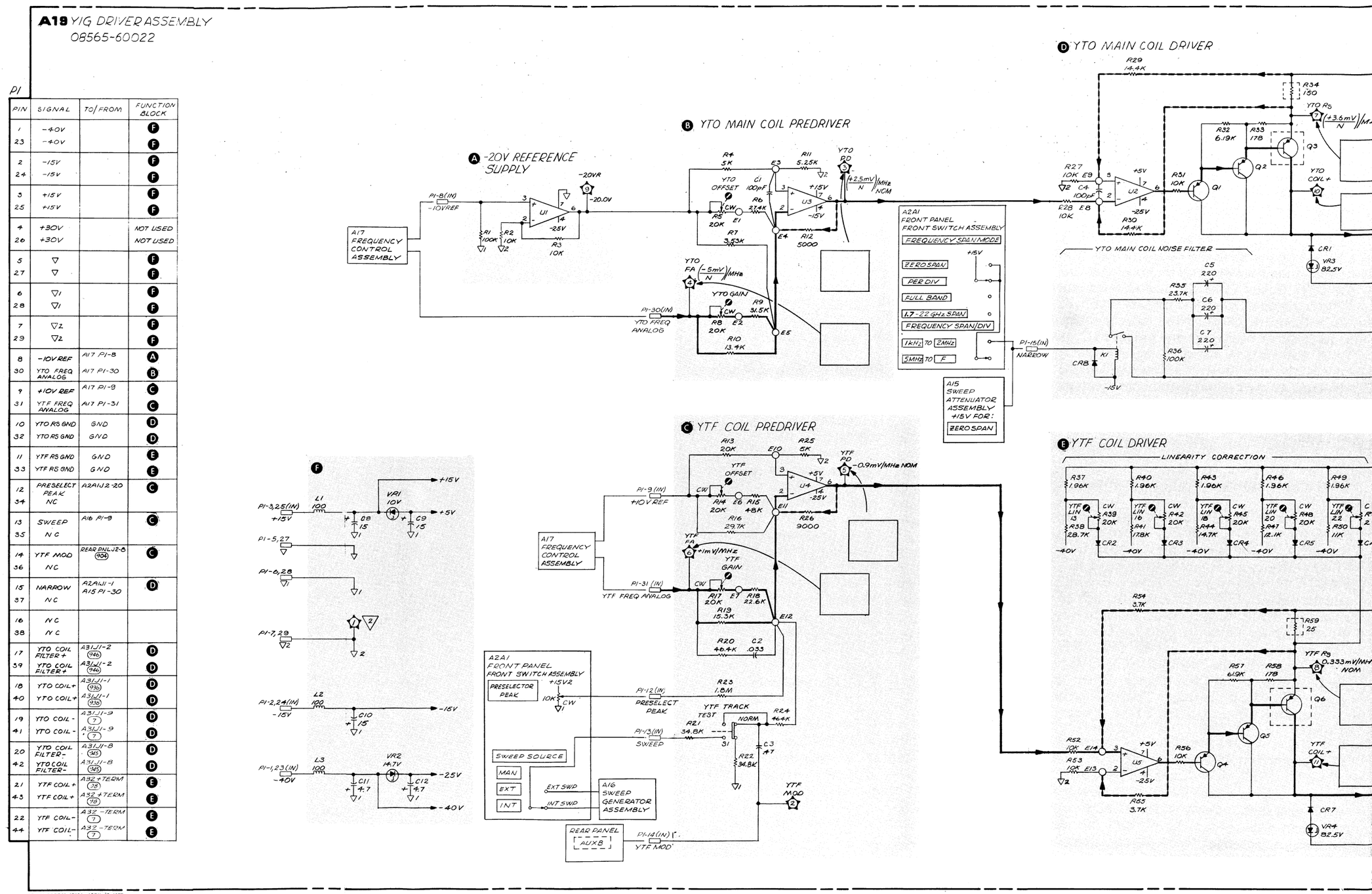

Scans by => ARTEK MEDIA © 2003-2005

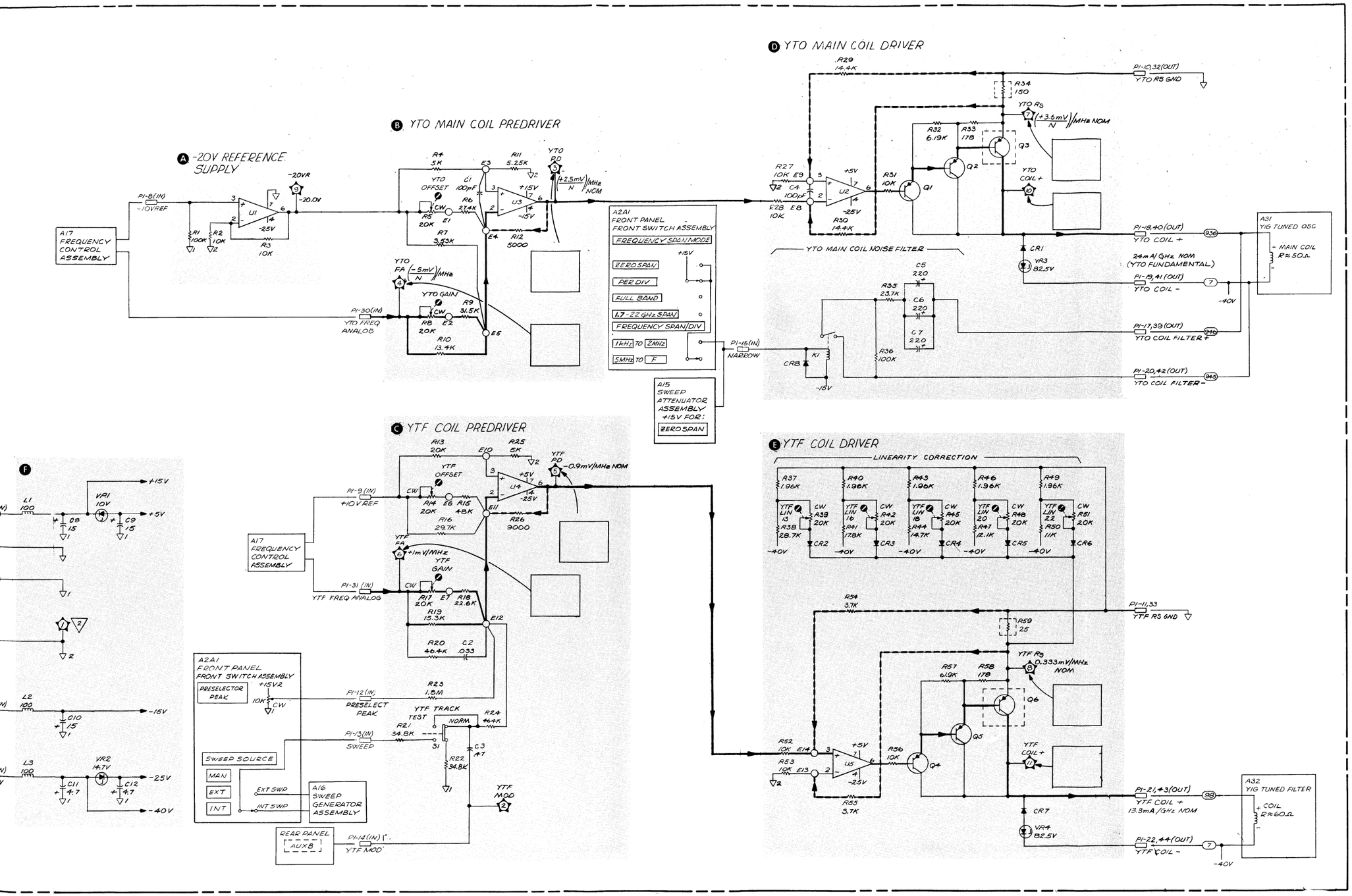

NOTES

1. REFERENCE DESIGNATORS WITHIN THIS ASSEMBLY ARE ABBREVIATED. FOR COMPLETE DESIGNATOR PREFIX WITH ASSEMBLY REFERENCE DESIGNATOR.
2. UNLESS OTHERWISE INDICATED:
   RESISTANCE IN OHMS (Ω)
   CAPACITANCE IN MICROFARADS (μF)
   INDUCTANCE IN MICROHENRIES (μH)
3. TEST POINT WAVEFORMS ASSUME THE FOLLOWING SETTINGS:
   GREEN (NORMAL) SETTINGS
   FREQUENCY SPAN/DIV: 100 MHz
   FREQUENCY BAND: 1.7-4.1 GHz
   FREQUENCY: 3.000 GHz
4. TEST POINT SIGNAL VOLTAGES ARE REFERENCED TO SIGNAL GROUND ▽2 ON THIS ASSEMBLY. CONNECT THE LOW INPUT OF A DVM TO TP1 FOR MOST ACCURATE DC MEASUREMENTS. SET ANALYZER TO ZERO SPAN TO MEASURE DC VOLTAGES AT TP3, TP4, TP6, TP7, TP8, TP10 & TP11.
5. TUNING SENSITIVITIES (IN $\frac{mV}{N}$/MHz) ARE FOR THE YTO (1st LO) Nth HARMONIC. THE TUNING SENSITIVITIES FOR THE YTO FUNDAMENTAL, ALWAYS HAS N=1. SEE NOTE 6 FOR HARMONIC NUMBER (N) VERSUS FREQUENCY BAND.
6. FREQUENCY BANDS

FREQUENCY BAND GHz	BAND LINE	HARMONIC NUMBER	SIGN	IF FREQ MHz
.01-1.8	B1	N=1	−	2050
1.7-4.1	B2	N=1	−	321.4
3.8-8.5	B3	N=2	−	321.4
5.8-12.9	B4	N=3	−	321.4
8.5-18	B5	N=4	+	321.4
10.5-22	B6	N=5	+	321.4
14.5-26.6	B7	N=6	+	2050
22.9-40	B8	N=10	+	2050

7. THERE ARE GUARD RING TRACES ON THE PC BOARD WHICH ARE NOT SHOWN ON THE SCHEMATIC. THESE GUARD SENSITIVE CIRCUIT POINTS FROM LEAKAGE CURRENTS. E1 THRU E14 ARE TERMINALS THAT ISOLATE SENSITIVE CIRCUIT POINTS FROM LEAKAGE CURRENTS.
8. REFERENCE DESIGNATORS

A19	
LAST USED	NOT USED
C12	
CR8	
E14	
K1	
L3	
Q6	
R59	
S1	
U5	
VR4	

14
A19

Figure 8-36. A19 YIG Driver Assembly, Schematic Diagram

Scans by => ARTEK MEDIA © 2003-2005

SERVICE SHEET 15

A14 TUNING STABILIZER CONTROL ASSEMBLY, CIRCUIT DESCRIPTION

The Tuning Stabilizer Control Assembly contains circuits which tune the YIG-Tuned Oscillator (YTO) over a frequency range of approximately 21 MHz. Tuning is accomplished by controling current which is proportional to frequency in the YTO Tickler Coil. There are three signals which can vary the YTO frequency as controlled by the Tickler Coil: the FINE TUNE signal, the TICK ATTEN SWP signal for narrow frequency spans (1 kHz) DIV to 2 MHz/DIV), and the ERROR signal from the Tuning Stabilizer Assembly. There are two correction circuits that process the signals which control the Tickler Coil. These circuits send center frequency and YTF frequency correction signals to the Frequency Control Assembly. Also on this board are the tuning stabilizer control circuits that are used only in the AUTO STABILIZER mode. In stabilized operation, the YTO, which is the first LO, is locked to a 1 MHz Voltage-Controlled Crystal Oscillator (VCXO). These circuits are the Control Generator, Error Amplifier, Sample and Hold, VCXO Sweep Inverter, VCXO Sweep Driver, and VCXO Sweep Buffer.

The capacitors across the inputs of U1, U2, U4, U5, U6, U7, and U8 reduce the susceptibility of these op amps to external RF interference.

Tickler Sweep + Tune Summer C

Three signals are summed into op amp U4, which is connected as an inverting summing amplifier: The FINE TUNE signal from the FINE tuning control at the front panel, the TICK ATTEN SWP from the Sweep Attenuator Assembly, and the −10V REF voltage from the Frequency Control Assembly. The −10 V REF offset voltage is summed in so that the sweep at the output of U4 will be centered about 0V when the FINE tuning control is set at mid-position. This stage has an inverting gain of 2 for the TICK ATTEN SWP signal. R42 and C8 filter out noise on the FINE TUNE line. The output of this stage goes to both the Tickler Coil Predriver and to the VCXO Sweep Inverter, the latter being used only for stabilized operation.

Tickler Coil Predriver F

The main input to the Tickler Coil Predriver is the output from the Tickler Sweep + Tune Summer. Op amp U7 is connected as an inverting amplifier with a nominal inverted gain of 0.67 to this signal. The TICK SWP adjustment R57 adjusts the gain of this stage to compensate for differences in the tuning sensitivity of the YTO Tickler Coil. It is adjusted to give the correct span for the narrow frequency spans (1 kHz/DIV to 2 MHz/DIV) for unstabilized operation. For unstabilized operation, FET 2 SWITCH Q23 is turned off. Once stabilization is completed, this FET stays on for stabilized operation. With this FET on, the output from the Error Amplifier is summed into the Tickler Coil Predriver. This is the path by which the ERROR signal from the Tuning Stabilizer Assembly is fed back to the YTO to effect changes in its frequency.

Tickler Coil Driver J

The Tickler Coil Driver drives the Tickler Coil of the YTO Assembly. Op amp U2 is basically an inverting, unity gain amplifier. R82 causes the circuit to function as a constant current source whose current is proportional to the voltage at its input. R81 has little effect on voltage levels but improves the accuracy of the constant current source. The voltage is ganged differentially across R82 with negative feedack through R78 and a slight amount of positive feedback through R81.

C19 provides frequency compensation for U2 and appreciably decreases the bandwidth of the stage to reduce the noise applied to the YTO Tickler Coil. Q17 and Q18 are current boosters to provide the required current capability (about 55 mA) for driving the YTO Tickler Coil.When the current through R79, which is in series with the positive power input to U2, reaches approximately 5 mA, there is 0.5V across the base-emitter of Q18, which turns it on slightly, providing added current to the output for positive voltages. As the current requirement increases, the voltage across R79 increases, and Q18 provides a larger proportion of the current. Q17 functions in the same way for the negative output voltages.

Center Frequency Correction Summer G

The output of the Center Frequency Correction Summer is the CENTER FREQ CORRECT signal to the Frequency Control Assembly. Three signals are summed into op amp U3A: The FINE TUNE signal from the front-panel FINE tuning control, the FREQ CAL signal from the front-panel FREQ CAL adjustment, and the output of the Error Amplifier. When the analyzer is in the stabilized mode, if the coarse TUNING control is accidentally moved slightly, an output from the Error Amplifier is generated. The resulting change on the CENTER FREQ CORRECT output of U3A corrects the FREQUENCY GHz readout on the front panel so that it does not change. When the analyzer is in the stabilized mode, if the coarse TUNING control is moved slightly, the back loop will prevent the YTO frequency from shifting.

YTF Correction Attenuator I

Op amp U3B is connected as an inverting, unity gain amplifier with a gain of 0.2. The YTF CORRECT output signal goes to the Frequency Control Assembly where this signal (proportional to the frequency change in the YTO caused by the Tickler Coil) is added to the YTO FREQ ANALOG signal (proportional to the frequency change in the YTO caused by the Main Coil) so that the YTF will track with the YTO. The YTF CORRECT signal has a maximum effect on the YTF frequency of ±10.5 MHz.

Control Generator A

The Control Generator generates a series of timing pulses to trigger events necessary to accomplish AUTO STABILIZER lock of the YTO, which is the first LO in the analyzer. (See Figure 8-37.) When the analyzer controls are changed from unstabilized mode to stabilized settings, the TUNE STAB line is activated (+15V) and the timing pulse train, which lasts for about 430 msec, is initiated. The analyzer settings for stabilized mode are: AUTO STABILIZER on (pushbutton out) with analyzer in ZERO SPAN mode or in PER DIV mode with FREQUENCY SPAN/DIV set to 100 kHz/DIV or less (the blue numbered region). When in the stabilized mode, the STABILIZED FINE TUNE ONLY LED is lit. Once the Control Generator has generated a train of pulses and the YTO is stabilized, another train will be generated only if the stabilizer is turned off and back on again.

When the last of the three series-connected switches is closed (FREQUENCY SPAN/DIV, FREQUENCY SPAN MODE, or AUTO STABILIZER), +15V is applied to the TUNE STAB line and the stabilization process begins at this time t_0. At this instant the +15V turns on Q1, which turns on Q2 (+20V Switch), applying +20V to the Tuning Stabilizer Assembly to turn on the VCXO Pulse Amplifier. At the same time, the +20V from Q2 turns off Q10 which then turns on Q9 (Zero Span Driver) to activate the ZERO line (+15V). The ZERO signal goes to the Sweep Attenuator Assembly to put the analyzer in Zero Span mode. This removes sweep from the YTO during the stabilization process. The +15V on the TUNE STAB line charges C1 through R2, turning on Delay 1 transistors Q3 and Q4 20 msec after the TUNE STAB line is activated.

At this time (t_1), the output from Q4 goes to FET 1 Switch Driver Q16, turning it off. FET 1 Switch Q19, part of the Error Amplifier, has been on, shorting the signal to ground. It is turned off by the −15V from the FET 1 Switch Driver. The ERROR AMPL signal from the Error Amplifier is passed through the closed contacts of reed relay K1, through the Sample and Hold, VCXO Sweep Driver and VCXO Sweep Buffer circuits to the VCXO in the Tuning Stabilizer Assembly. This signal causes the VCXO to shift frequency to move a harmonic lock point to the YTO frequency. The +15V from Q4 charges C2 through R6, turning on Delay 2 transistors Q5 and Q6 300 msec after t_1.

At this time (t_2), the +15V output from Q6 turns off Relay Driver Q7, which removes the ground return for relay K1. This opens K1, leaving the ERROR AMPL signal, which was present just before time t_2, stored on C11. The +15V from Q6 charges C3 through R10, turning on Delay 3 transistors Q15 and Q14 30 msec after t_2.

At this time (t_3), +15V from Q14 turns off Q8, which then turns FET 1 Switch Driver Q16 back on. The +15V from Q16 then turns FET 1 Switch Q19 on again to discharge C7 in the Error Amplifier and A36A1C17 in the Tuning Stabilizer Assembly. The +15V from Q14 charges C4 through R15, turning on Delay 4 transistor Q13 30 msec after t_3.

Scans by => ARTEK MEDIA © 2003-2005

ɔack to the YTO to effect

Tickler Coil of the YTO
y an inverting, unity gain
ınction as a constant current
l to the voltage at its input.
ɔut improves the accuracy of
tage is ganged differentially
through R78 and a slight
R81.

on for U2 and appreciably
:o reduce the noise applied to
are current boosters to pro-
ıbout 55 mA) for driving the
t through R79, which is in
o U2, reaches approximately
mitter of Q18, which turns it
t to the output for positive
increases, the voltage across
arger proportion of the cur-
ʼay for the negative output

ınmer G

y Correction Summer is the
l to the Frequency Control
ed into op amp U3A: The
ınel FINE tuning control, the
ınel FREQ CAL adjustment,
r. When the analyzer is in the
IING control is accidentally
Error Amplifier is generated.
R FREQ CORRECT output
GHz readout on the front
When the analyzer is in the
NG control is moved slightly,
ʼequency from shifting.

verting, unity gain amplifier
CT output signal goes to the
this signal (proportional to
sed by the Tickler Coil) is ad-
gnal (proportional to the fre-
ɔy the Main Coil) so that the
YTF CORRECT signal has a
cy of ±10.5 MHz.

Control Generator A

The Control Generator generates a series of timing pulses to trigger events necessary to accomplish AUTO STABILIZER lock of the YTO, which is the first LO in the analyzer. (See Figure 8-37.) When the analyzer controls are changed from unstabilized mode to stabilized settings, the TUNE STAB line is activated (+15V) and the timing pulse train, which lasts for about 430 msec, is initiated. The analyzer settings for stabilized mode are: AUTO STABILIZER on (pushbutton out) with analyzer in ZERO SPAN mode or in PER DIV mode with FREQUENCY SPAN/DIV set to 100 kHz/DIV or less (the blue numbered region). When in the stabilized mode, the STABILIZED FINE TUNE ONLY LED is lit. Once the Control Generator has generated a train of pulses and the YTO is stabilized, another train will be generated only if the stabilizer is turned off and back on again.

When the last of the three series-connected switches is closed (FREQUENCY SPAN/DIV, FREQUENCY SPAN MODE, or AUTO STABILIZER), +15V is applied to the TUNE STAB line and the stabilization process begins at this time t_0. At this instant the +15V turns on Q1, which turns on Q2 (+20V Switch), applying +20V to the Tuning Stabilizer Assembly to turn on the VCXO Pulse Amplifier. At the same time, the +20V from Q2 turns off Q10 which then turns on Q9 (Zero Span Driver) to activate the ZERO line (+15V). The ZERO signal goes to the Sweep Attenuator Assembly to put the analyzer in Zero Span mode. This removes sweep from the YTO during the stabilization process. The +15V on the TUNE STAB line charges C1 through R2, turning on Delay 1 transistors Q3 and Q4 20 msec after the TUNE STAB line is activated.

At this time (t_1), the output from Q4 goes to FET 1 Switch Driver Q16, turning it off. FET 1 Switch Q19, part of the Error Amplifier, has been on, shorting the signal to ground. It is turned off by the −15V from the FET 1 Switch Driver. The ERROR AMPL signal from the Error Amplifier is passed through the closed contacts of reed relay K1, through the Sample and Hold, VCXO Sweep Driver and VCXO Sweep Buffer circuits to the VCXO in the Tuning Stabilizer Assembly. This signal causes the VCXO to shift frequency to move a harmonic lock point to the YTO frequency. The +15V from Q4 charges C2 through R6, turning on Delay 2 transistors Q5 and Q6 300 msec after t_1.

At this time (t_2), the +15V output from Q6 turns off Relay Driver Q7, which removes the ground return for relay K1. This opens K1, leaving the ERROR AMPL signal, which was present just before time t_2, stored on C11. The +15V from Q6 charges C3 through R10, turning on Delay 3 transistors Q15 and Q14 30 msec after t_2.

At this time (t_3), +15V from Q14 turns off Q8, which then turns FET 1 Switch Driver Q16 back on. The +15V from Q16 then turns FET 1 Switch Q19 on again to discharge C7 in the Error Amplifier and A36A1C17 in the Tuning Stabilizer Assembly. The +15V from Q14 charges C4 through R15, turning on Delay 4 transistor Q13 30 msec after t_3.

At this time (t_4), the signal from Q13 turns Q8 on again, which then turns off FET 1 Switch Driver Q16. This then turns FET 1 Switch Q19 off again. At the same time FET 2 Switch Driver Q12 is also turned on, and +15V is applied to FET 2 Switch Q23, turning it on. The ERROR AMPL signal is now routed to the YTO Tickler Coil Predriver, where it controls the YTO frequency. The +15V from Q12 charges C5 through R28, turning on Delay 5 transistor Q11 40 msec after t_4.

At this time (t_5), Q10 is turned back on, which turns off Zero Span Driver Q9. The ZERO line no longer has +15V applied to it by Q9, and the sweep is turned back on (unless the front-panel ZERO SPAN mode pushbutton is depressed). The analyzer is now in the stabilized mode.

Error Amplifier B

The input to the Error Amplifier is the ERROR signal from the Discriminator in the Tuning Stabilizer Assembly. Op amp U5 is connected as an inverting amplifier with a gain of 3.16 at dc and low frequencies. R38 and C7 roll off the gain at higher frequencies to compensate the frequency response of the stabilizer lock loop. The ERROR signal is nominally at 0 Vdc immediately after the YTO is stabilized. There is some ac signal present, corresponding to the FM which is being eliminated at the YTO. The ERROR signal has a sensitivity of +0.46V per MHz of correction for the fundamental of the YTO. This sensitivity is divided by the harmonic number N for the higher frequency bands, which use harmonic mixing. When the analyzer is not in the stabilized mode, and also at the time interval t_3 to t_4 during the stabilization process, Switch Q19 is turned on, shorting the ERROR signal to ground.

Sample and Hold D

This circuit samples and holds the ERROR AMPL signal, which was required to move the VCXO harmonic lock point to the YTO frequency. With the reed relay K1 closed, the ERROR AMPL signal from the output of the Error Amplifier is applied to the storage capacitor C11. At time T_2 during the stabilization process, K1 is opened and remains open unless the AUTO STABILIZER is turned off and back on again. C11 has a very high leakage resistance, and Q20 is a MOSFET with a very high input resistance. This means that the voltage on C11 will be maintained with little change for a long time. Q20 is connected as a source follower to monitor the voltage on the storage capacitor C11. Q21 is used to bias Q20 such that the source to drain voltage is maintained nearly constant regardless of variations in output voltage at TP12. The output of this stage goes to the VCXO Sweep Driver.

VCXO Sweep Inverter E

This stage inverts the TICK S+T signal from the Tickler Sweep + Tune Summer so it is the correct polarity for input to the VCXO Sweep Driver. Op amp U8 is connected as an inverting amplifier with an inverted gain of 1.62.

VCXO Sweep Driver H

The VCXO SWP output from this stage goes to the 2/F potentiometer which is ganged to the coarse TUNING potentiometer at the front panel. The 2/F VCXO SWP signal goes to the VCXO Sweep Buffer. The output of the VCXO Sweep Buffer, .4/F VCXO SWP, goes to the VCXO Sweep Varactor Driver in the Tuning Stabilizer Assembly. The VCXO Sweep Driver has two

TIMING SUMMARY

t_0	The stabilization process is initiated by changing the analyzer controls from unstabilized to stabilized settings. The VCXO Pulse Amplifier is turned on and the sweep is shut off by activation of the ZERO line.
t_1	FET 1 Switch, which has been on, shorting the ERROR signal to ground, is turned off. The ERROR AMPL signal is allowed to pass through the closed contacts of K1, through the Sample and Hold circuit, VCXO Sweep Driver, and VCXO Sweep Buffer to the VCXO. This signal causes the VCXO to shift frequency to move a harmonic lock point to the YTO frequency.
t_2	Relay K1 opens leaving the ERROR AMPL signal, which was present just before time t_2, stored on the capacitor C11.
t_3	FET 1 Switch is turned on again to discharge A36A1C17 at the output of the Discriminator and C7 in the Error Amplifier.
t_4	FET 1 Switch is again turned off and FET 2 Switch is turned on, routing the ERROR AMPL signal to the Tickler Coil Predriver, where it controls the YTO frequency.
t_5	The ZERO line is turned off causing the sweep to be resumed. The stabilization process is now completed with the analyzer in the stabilized mode.

Figure 8-37. Control Generator Timing Diagram (1 of 2)

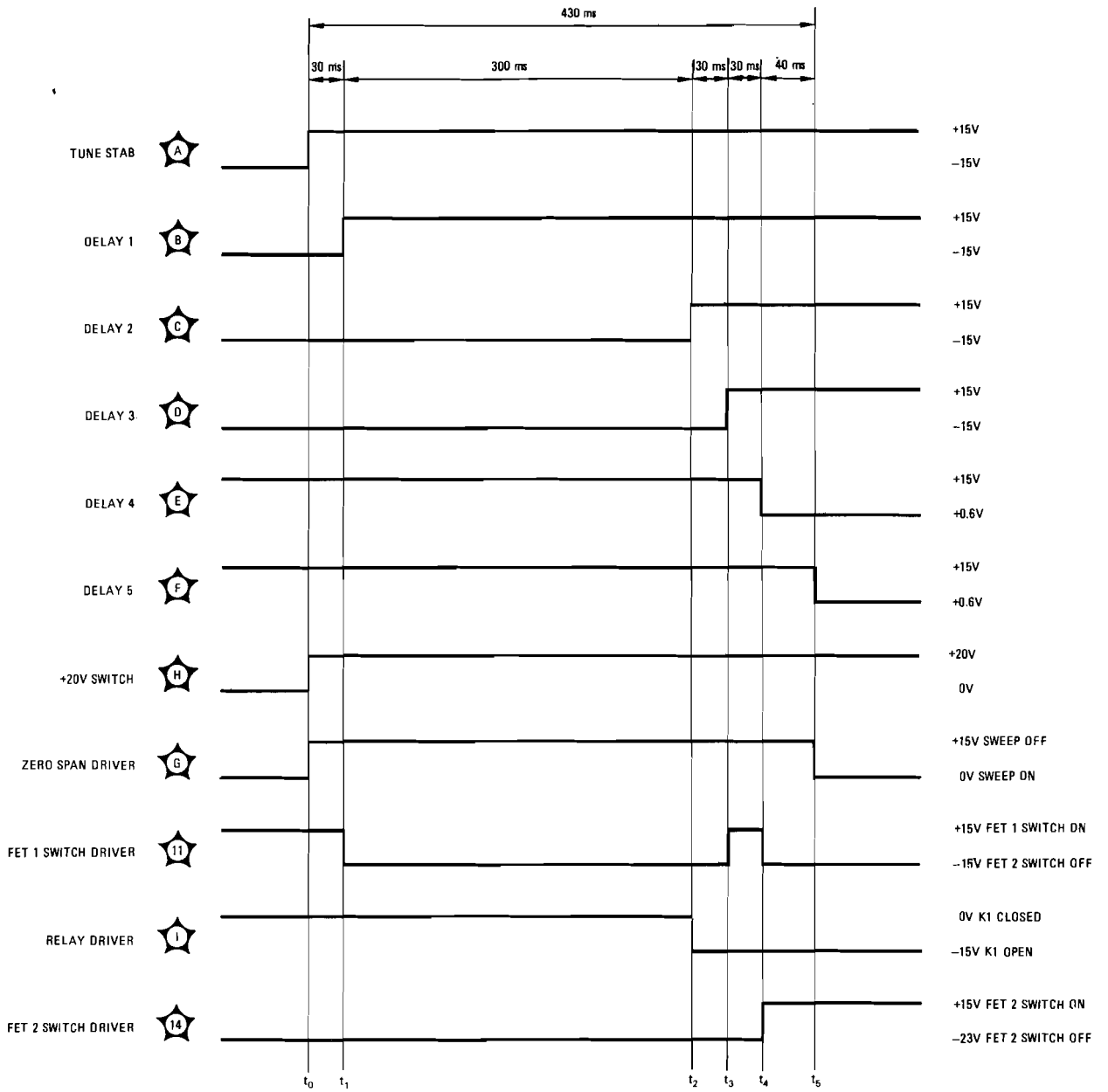

Figure 8-37. Control Generator Timing Diagram (2 of 2)

Scans by ARTEK MEDIA =>

inputs. One input is the voltage from the Sample and Hold circuit, which holds the voltage required to move the VCXO harmonic lock point to the YTO frequency. The other input, from the VCXO Sweep Inverter, is an inverted and amplified version of the TICK S+T signal at the output of the Tickler Sweep + Tune Summer. This signal provides the FINE tuning and sweep for the stabilized mode, for if the TICK S + T signal were applied only to the Tickler Coil Driver, the stabilization loop would hold the frequency constant. In stabilized operation the TICK S + T signal is still applied to the Tickler Coil Driver, so that the ERROR voltage does not need to provide the sweep ramp.

The FET OFFSET potentiometer R68 is adjusted to compensate for the offset introduced by FET Q20. R64 and C14, with R65, provide frequency compensation for the lock loop during the interval from t_1 to t_2 of the stabilization process, when the VCXO is momentarily locked to the YTO. Op amp U1 is connected as an inverting amplifier. It has a nominal inverted unity gain for the Sample and Hold output signal and a nominal inverted gain of 5.1 for the output of the VCXO Sweep Inverter. The VCXO SWP potentiometer R71 is adjusted to provide the proper frequency spans in stabilized operation.

VCXO Sweep Buffer (K)

The input to this stage (2/F VCXO SWP) comes from the 2/F potentiometer ganged with the coarse TUNING potentiometer at the front panel. The resistance put in this line by the 2/F potentiometer increases as the YTO frequency is increased. For a higher YTO frequency, the YTO is locked to a higher harmonic of the 1 MHz VCXO. This potentiometer, with R74 and R73, attenuates the signal applied to the VCXO such that a given VCXO SWP voltage causes the same movement of the VCXO harmonic to which the YTO is locked, regardless of its harmonic number. For FREQUENCY BAND GHz .01 – 1.8, the B1 line is activated (+15V) and Q22 is turned off so that R73 does not shunt R74. This gives less attenuation range to the 2/F potentiometer, which is necessary for this band as the coarse TUNING control has less YTO tuning range. For the harmonic mixing bands, this sensitivity is divided by the harmonic number N.

TUNING STABILIZER SYSTEM, CIRCUIT DESCRIPTION

A14 Tuning Stabilizer Control Assembly (Service Sheet 15) and A36 Tuning Stabilizer Assembly (Service Sheet 16) are closely related and together form the Tuning Stabilizer System.

The Tuning Stabilizer system locks the first local oscillator (LO), which is a YIG-Tuned Oscillator (YTO), to a harmonic of a 1 MHz crystal oscillator to reduce the residual FM Of the first LO. Stabilized operation is permitted for narrow frequency spans (1 kHz/DIV to 100 kHz/DIV) and for ZERO SPAN mode.

Figure 8-38 is a simplified block diagram of the Tuning Stabilizer System. The lock loop can be considered as an IF-type Automatic Frequency Control (AFC) system. The sampler functions as a

Scans by ARTEK MEDIA =>

mixer with the first LO signal as one input and the harmonic of the 1 MHz oscillator as the other input. The 2460 harmonics betweeen 2.0 and 4.46 GHz are mixed with the first LO signal in the Sampler. The Sampler output contains the sum and difference frequencies of the two inputs. The output is filtered by a 500 kHz low-pass filter, so only the difference between the LO signal and the nearest 1 MHz harmonic need be considered. The first LO signal can never be more than 500 kHz away from one of the harmonic pulses, so there will always be an output from the filter. The output from the filter is applied to a Discriminator that produces an output voltage related to frequency. (See the Discriminator block in Figure 8-38.)

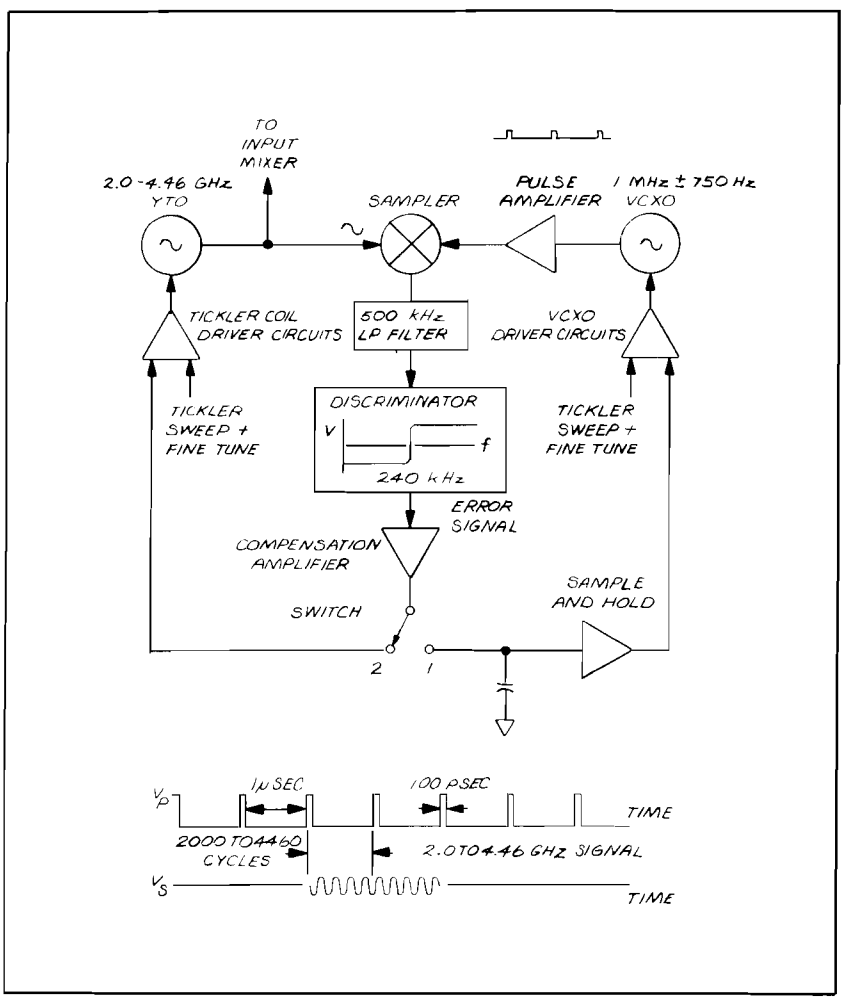

Figure 8-38. Tuning Stabilizer System, Simplified Block Diagram

The error signal from the Discriminator is fed through a Compensation Amplifier and combined with the Tickler Sweep + Fine Tune signal. This signal is then applied to the YTO, causing the frequency to change to produce a near-zero ERROR signal. This

(Continued on next Page)

Scans by ARTEK MEDIA =>

Continued from preceding page
means that the YTO frequency will differ from a 1 MHz harmonic by approximately 240 kHz, as shown below:

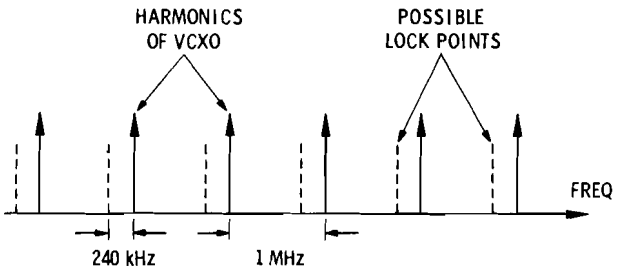

The frequency is approximate because this is an AFC system with a finite loop gain of 1000. When lock is accomplished, if the YTO has to move 100 kHz to get to a lock point, the Discriminator has to provide an ERROR voltage to do this; and the difference frequency will differ from 240 kHz by 100 Hz.

To achieve initial lock, the YTO is not actually moved to a lock point. Instead, a lock point is brought to the YTO frequency to avoid a center frequency shift in the display when the Tuning Stabilizer System is actuated. This is accomplished by initially reversing the AFC roles of the 1 MHz oscillator and the YTO.

The ERROR signal is initially fed back to the frequency control circuitry of the 1 MHz Voltage Controlled Crystal Oscillator (VCXO), switch position 1. The frequency of the VCXO is shifted to bring a lock point to the YTO. In this connection, the YTO rather than the VCXO is functioning as the reference. After a fixed time, the ERROR signal is switched from the VCXO to the YTO (switch position 2), locking the YTO to a stable VCXO. The ERROR signal that moved a lock point to the YTO frequency is stored on a capacitor in the Sample and Hold Circuit.

Scans by ARTEK MEDIA =>

A14

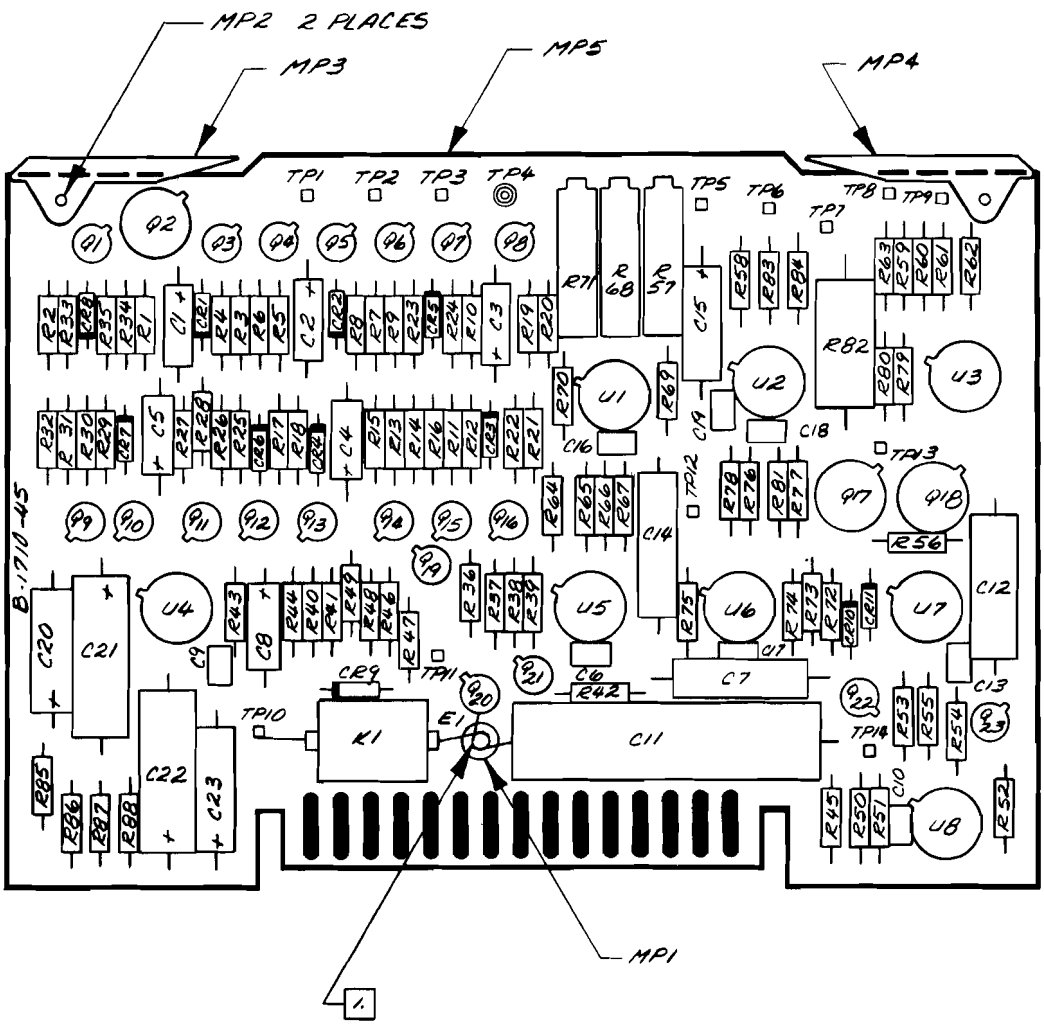

Figure 8-39. A14 Tuning Stabilizer Control Assembly, Component Locations

Scans by ARTEK MEDIA =>

Scans by => ARTEK MEDIA © 2003-2005

A14 TUNING STABILIZER CONTROL ASSEMBLY 08505-60018

P1

PIN	SIGNAL	TO/FROM	FUNCTION BLOCK
1	+20V		L
16	-40V		L
2	-15V		L
17	-15V		L
3	+15V		L
18	+15V		L
4	+20V SW	A36 (6)	A
19	+30V		L
5	▽		L
20	▽		L
6	▽1		L
21	▽1		L
7	▽2		L
22	▽2		L
8	FREQ CAL	A2A1J2-B	G
23	TUNE STAB	A2A1J2-6	A
9	FINE TUNE	A2A3 (31K)	C
24	YTF CORRECT	A17 P1-13	I
10	TICK ATTEN SWP	A15 P1-10	C
25	CENTER FREQ CORRECT	A17 P1-14	G
11	-10V REF	A17 P1-8	C H
26	ERROR	A36 (95Ω)	B
12	VCXO SWP	A2A3 (317)	H
27	.4/F VCXO SWP	A36 (36)	K
13	2/F VCXO SWP	A2A3 (318)	K
28	NC		
14	NC		
29	ZERO	A15 P1-29	A
15	B1	A2A1J1-17	K
30	YTO TICK COIL	A31 J1-3 (92Ω)	J

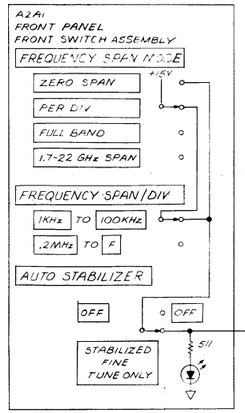

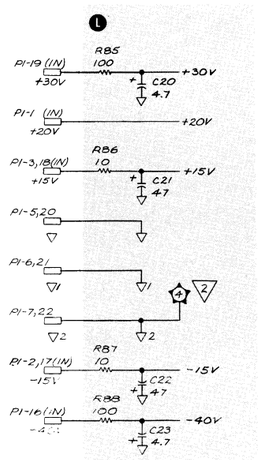

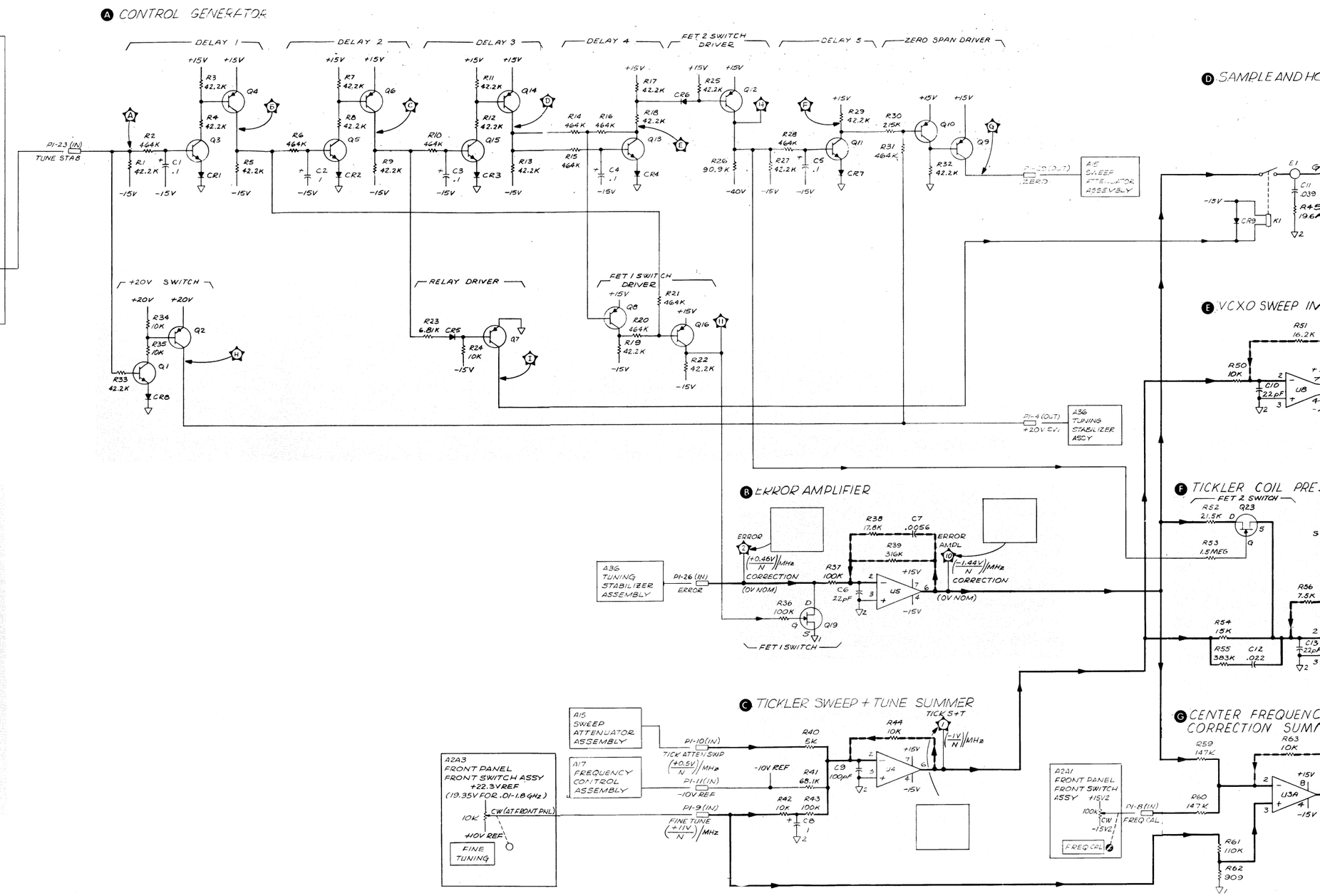

Scans by => ARTEK MEDIA © 2003-2005

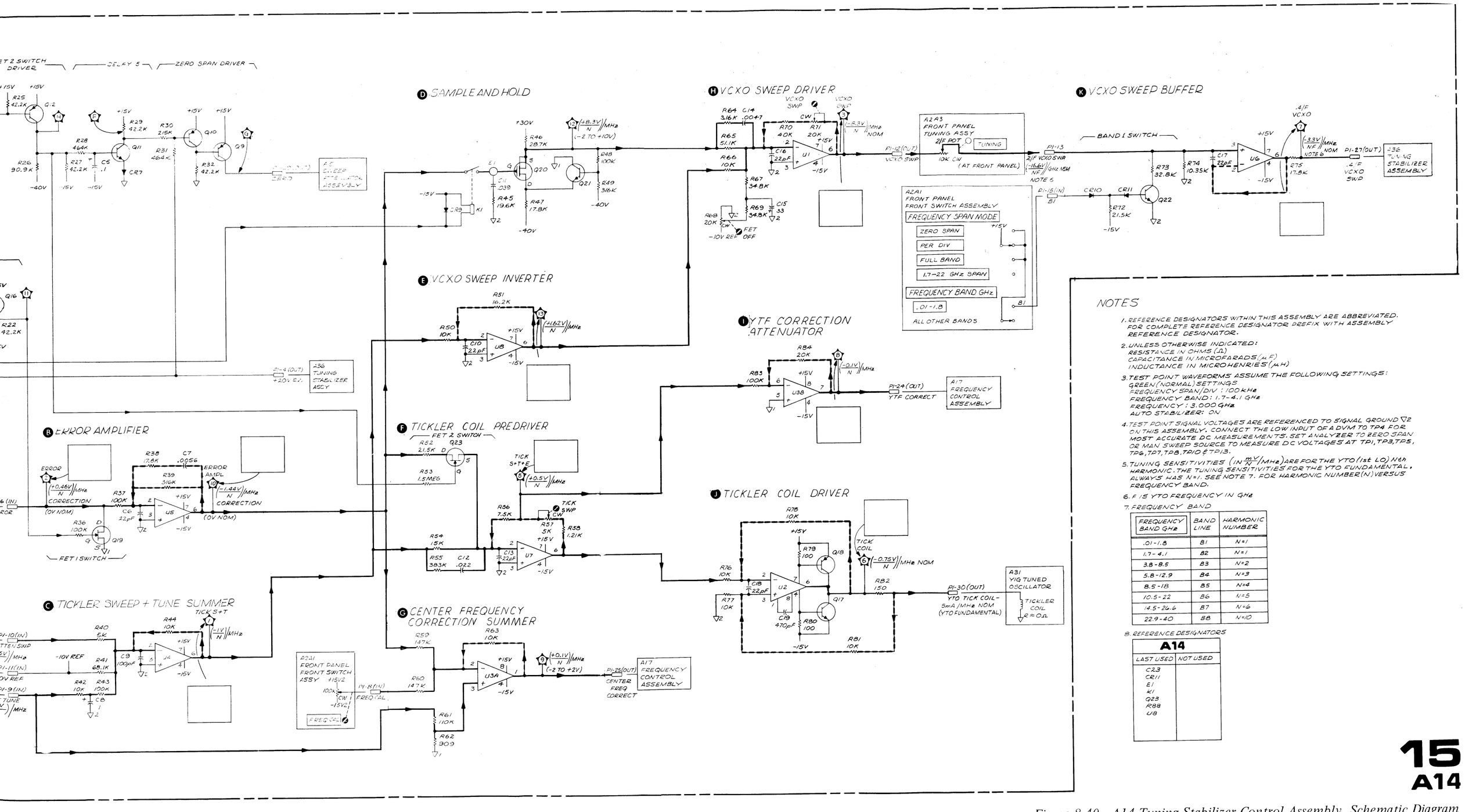

NOTES

1. REFERENCE DESIGNATORS WITHIN THIS ASSEMBLY ARE ABBREVIATED. FOR COMPLETE REFERENCE DESIGNATOR PREFIX WITH ASSEMBLY REFERENCE DESIGNATOR.
2. UNLESS OTHERWISE INDICATED:
   RESISTANCE IN OHMS (Ω)
   CAPACITANCE IN MICROFARADS (μF)
   INDUCTANCE IN MICROHENRIES (μH)
3. TEST POINT WAVEFORMS ASSUME THE FOLLOWING SETTINGS:
   GREEN (NORMAL) SETTINGS
   FREQUENCY SPAN/DIV: 100 kHz
   FREQUENCY BAND: 1.7-4.1 GHz
   FREQUENCY: 3.000 GHz
   AUTO STABILIZER: ON
4. TEST POINT SIGNAL VOLTAGES ARE REFERENCED TO SIGNAL GROUND ▽2 ON THIS ASSEMBLY. CONNECT THE LOW INPUT OF A DVM TO TP4 FOR MOST ACCURATE DC MEASUREMENTS. SET ANALYZER TO ZERO SPAN OR MAN SWEEP SOURCE TO MEASURE DC VOLTAGES AT TP1, TP3, TP5, TP6, TP7, TP8, TP10 & TP13.
5. TUNING SENSITIVITIES (IN $\frac{mV}{N}$/MHz) ARE FOR THE YTO (1st LO) Nth HARMONIC. THE TUNING SENSITIVITIES FOR THE YTO FUNDAMENTAL, ALWAYS HAS N=1. SEE NOTE 7. FOR HARMONIC NUMBER (N) VERSUS FREQUENCY BAND.
6. F IS YTO FREQUENCY IN GHz
7. FREQUENCY BAND

FREQUENCY BAND GHz	BAND LINE	HARMONIC NUMBER
.01-1.8	B1	N=1
1.7-4.1	B2	N=1
3.8-8.5	B3	N=2
5.8-12.9	B4	N=3
8.5-18	B5	N=4
10.5-22	B6	N=5
14.5-26.6	B7	N=6
22.9-40	B8	N=10

8. REFERENCE DESIGNATORS

A14	
LAST USED	NOT USED
C23	
CR11	
E1	
K1	
Q23	
R88	
U8	

15
A14

Figure 8-40. A14 Tuning Stabilizer Control Assembly, Schematic Diagram

Scans by => ARTEK MEDIA © 2003-2005

SERVICE SHEET 16
A36 TUNING STABILIZER ASSEMBLY

The Tuning Stabilizer Assembly is used only in the AUTO STABILIZER mode, where the YTO (the first LO) is locked to a 1 MHz Voltage-Controlled Crystal Oscillator (VCXO). This assembly comprises three subassemblies: A36A1 Discriminator Assembly, A36A2 VCXO Assembly, and A36A3 Sampler Assembly. Additional control circuitry for the tuning stabilizer operation is in the Tuning Stabilizer Control Assembly.

A36A2 VCXO Assembly

Voltage Controlled Crystal Oscillator (VCXO) A

The Voltage-Controlled Crystal Oscillator (VCXO) is the 1 MHz reference for the tuning stabilizer circuit. The 1 MHz oscillator is electronically tunable ±750 Hz. The VCXO consists of a high-Q Fixed Frequency Crystal Filter, a Limiting Amplifier, a low-Q LC Variable Frequency Filter, and a Phase-Splitter circuit. The oscillator will oscillate at a frequency such that the phase shift through the two filters is zero. If the Variable Frequency Filter is set by voltage on the varactor diodes to 1 MHz, the phase shift through each filter will be zero and the sum will be zero. If the frequency of the Variable Frequency Filter is set to a frequency different from 1 MHz, the frequency of oscillation will shift such that the phase shift through the Crystal Filter is equal in magnitude, but opposite in sign, to the phase shift through the Variable Frequency Filter. By changing the bias voltage on the varactor diodes A2CR1 through A2CR4, the oscillation frequency is changed. Since the Q of the Crystal Filter is much greater than the Q of the LC Filter, the frequency stability is on the order of the crystal stability.

The VCXO is tunable over ±750 Hz. This whole tuning range is used only at the low end of the 1.7 — 4.1 GHz band. Approximately ±250 Hz of this range is for moving the VCXO to the lock point as determined by the voltage output from the sample and hold circuit. Depending on how close the YTO frequency is to one of the 1 MHz harmonic lock points, the VCXO will move from 0 to ±250 Hz when stabilized operation is initiated. The FINE tuning control has a range of approximately ±250 Hz, which corresponds to ±0.5 MHz at the YTO. The amount the VCXO is tuned to achieve lock and for FINE tuning decreases as the YTO frequency is increased. The sweep ramp for a FREQUENCY SPAN/DIV of 100 kHz has a range of ±250 Hz. The amount the VCXO is swept for ramp a given frequency span is decreased as the YTO frequency is increased; it is also decreased for the higher bands, where harmonic mixing is used.

An accurate way to measure the VCXO frequency is with the VCXO cover installed. A2TP1 can be accessed through a hole in the cover. An oscilloscope probe that has less than 20 pF capacitance should be used. The frequency thus measured should be 1 MHz ± 1 kHz, with peak-to-peak amplitude of 5V to 9V. This scope probe should also be used to measure the signal at A2TP3.

There are four adjustable components in the VCXO circuit (see Tuning Stabilizer Adjustments in Section V). A2C16, 1 MHz PEAK, adjusts the center frequency of the Variable Frequency Filter. A2C2, 1.3 MHz NULL, is adjusted to balance out the capacitance of the crystal holder for A2Y1. A2C3, LINEARITY, adjusts the VCXO circuit to provide a linear frequency change with a linear change in bias voltage to varactor diodes A2CR1 through A2CR4. A2R26, 1 MHz GAIN, is a factory adjustment only. Do not adjust components unless necessary (see Section V).

A2Q2 and A2Q3 may be checked by applying a signal at A2TP1 and observing the output at A2TP3. Disconnect one end of A2C4 and connect a 1 MHz signal from A2TP1 to ground. The voltage at A2TP3 should peak between 4V and 9V when the frequency is varied around 1 MHz. The signal at the emitters of A2Q2 and A2Q3 should be a half-wave rectified sine wave with a positive peak of 2.4 ±0.5V and with the negative portion clipped at −0.6 ± 0.15V.

Quartz crystal A2Y1 can be checked for proper operation using the same test setup as for A2Q2 and A2Q3 above. Connect the oscilloscope to the source of FET A2Q4 and tune the 1 MHz signal source around 1 MHz. The 1 MHz sine wave at the source of A2Q4 should peak at 1 MHz.

VCXO Sweep Varactor Driver B.Bias voltage for varactor diodes A2CR1 through A2CR4 is supplied by op amp A2U1. The input to A2U1 is the .4/F VCXO SWP from the Tuning Stabilizer Co ol Assembly. This signal is an attenuated combination of the TICK ATTEN SWP and FINE TUNE signals and the output of the Sample and Hold circuit in the Tuning Stabilizer Control Assembly. This signal has been attenuated by an amount depending on the YTO frequency. When the analyzer is tuned to the low end of a band, the YTO frequency is near 2.05 GHz. With the YTO at 2.05 GHz, when locked to the 2050th VCXO harmonic, a frequency shift of 1 Hz at the VCXO will cause a shift of 2050 Hz at the YTO. When the analyzer is tuned to the high end of a band, the YTO frequency is near 4.40 GHz. With the YTO at 4.40 GHz, when locked to the 4400th VCXO harmonic, a frequency shift of 1 Hz a the VCXO will cause a shift of 4400 Hz at the YTO. To correct for the change in frequency shift as the YTO is tuned toward the high end of its range, the input signal to the VCXO must be attenuated.

The nominal tuning sensitivity on the .4/F VCXO line is −300 Hz/V for the 1 MHz fundamental. The nominal tuning sensitivity referred to the YTO frequency is −3.3V/MHz, divided by the YTO frequency in GHz. These sensitivities are for fundamental mixing in the First Mixer Assembly. For the harmonic mixing bands, these sensitivities are divided by the harmonic number N. The .4/F VCXO SWP is summed with an offset voltage at the negative input of A2U1. A2U1 has an inverted gain of 1.04 for the .4/F VCXO SWP signal. THERMISTOR A2RT1 varies the offset as a function of temperature to compensate for the temperature dependence of the varactors A2CR1 through A2CR4.

Pulse Amplifier C .The Pulse Amplifier converts the 1 MHz signal (±750 Hz) from the VCXO to a square wave pulse of sufficient amplitude to drive the mixer diode in the Sampler Assembly. The positive portion of the 1 MHz sine wave from the VCXO turns on A2Q5. The output of A2Q5 goes from +20V when it is turned off to near 0V when it is on. The +20VF2 voltage is switched off, disabling the Pulse Amplifier, when the analyzer is not in the AUTO STABILIZER mode. A2R23, A2R24, and A2CR9 provide for the same power dissipation whether +20 VF2 is off or on; this minimizes VCXO drift when the stabilizer is turned on after a period of analyzer operation with the stabilizer off. The pulse from A2Q5 is capacitively coupled to A2Q6, where it is inverted, giving an output at the collector of A2Q6 of −10V when off to near 0V when on. This signal is coupled into the Step Recovery Diode Driver A2Q7, whose output (TPD) is approximately a square wave of 1 MHz going from −10V when on to +0.7V when off. The positive portion of the output pulse is clamped at this level by the sampler diode (not shown) in the Sampler Assembly.

A36A3 Sampler Assembly

Sampler D . The Sampler mixes the 2.00 to 4.46 GHz signal from the YTO first LO with the harmonics from the 1 MHz VCXO and produces sum and difference output signals for the Discriminator Assembly. The YTO signal is routed through the First Mixer Assembly and a 2.0 to 4.5 GHz isolator AT2 before being applied to the Sampler. The YTO signal fed through the Sampler is terminated in a 50-ohm load at the rear-panel 1ST LO OUTPUT. The 1 MHz square wave from theVCXO Pulse Amplifier drives a step recovery diode in a differentiator circuit to produce a train of very narrow pulses. The frequency spectrum of the 1 MHz pulse train is a series of 1 MHz harmonics extending through 4.5 GHz. The Sampler mixes the 2460 harmonics between 2.00 and 4.46 GHz with the 2.00 to 4.46 GHzYTO signal. The output is amplified, then filtered through a 500 kHz Lowpass Filter and applied to a 240 kHz Discriminator. The output of the Discriminator is fed back as the ERROR signal to the Tuning Stabilizer Control Assembly, locking the YTO frequency to a harmonic from the VCXO. Immediately after the YTO is stabilized, the output from the Discriminator is 0V and the YTO frequency is offset from the nearest VCXO harmonic by approximatley 240 kHz.

To check the Sampler, do the following with the Analyzer in the stabilized mode: Observe voltage at TPD with an oscilloscope. The signal should be a 1 MHz square wave between −10 ± 1V and +0.7 ± 0.2V with a frequency of 1 MHz ± 10 kHz. If the waveform at TPD has an upper limit approaching +20V, check for an open A2W1 Cable or open Sampler Assembly step recovery diode. The sampler diode may be checked by inserting a wire in the pulse input connector J3 and checking the diode with an ohmmeter. Using an HP 412A Volt-Ohm-Ammeter, on the 100-ohm range, the diode should indicate 100 to 500 ohms with the positive probe to the center conductor and the negative probe to ground. The ohmmeter should indicate greater than 1 megohm in the reverse direction.

Scans by => ARTEK MEDIA © 2003-2005

nts in the VCXO circuit (see Section V). A2C16, 1 MHz y of the Variable Frequency adjusted to balance out the A2Y1. A2C3, LINEARITY, le a linear frequency change e to varactor diodes A2CR1 AIN, is a factory adjustment ss necessary (see Section V).

y applying a signal at A2TP1 Disconnect one end of A2C4 2TP1 to ground. The voltage nd 9V when the frequency is at the emitters of A2Q2 and ed sine wave with a positive ative portion clipped at −0.6

d for proper operation using d A2Q3 above. Connect the A2Q4 and tune the 1 MHz MHz sine wave at the source

.Bias voltage for varactor pplied by op amp A2U1. The P from the Tuning Stabilizer tenuated combination of the NE signals and the output of e Tuning Stabilizer Control nuated by an amount depen- e analyzer is tuned to the low is near 2.05 GHz. With the e 2050th VCXO harmonic, a will cause a shift of 2050 Hz ed to the high end of a band, . With the YTO at 4.40 GHz, armonic, a frequency shift of of 4400 Hz at the YTO. To y shift as the YTO is tuned e input signal to the VCXO

the .4/F VCXO line is −300 The nominal tuning sensitivity −3.3V/MHz, divided by the sitivities are for fundamental ly. For the harmonic mixing by the harmonic number N. an offset voltage at the nega- inverted gain of 1.04 for the OR A2RT1 varies the offset as pensate for the temperature through A2CR4.

Pulse Amplifier (C) .The Pulse Amplifier converts the 1 MHz signal (±750 Hz) from the VCXO to a square wave pulse of sufficient amplitude to drive the mixer diode in the Sampler Assembly. The positive portion of the 1 MHz sine wave from the VCXO turns on A2Q5. The output of A2Q5 goes from +20V when it is turned off to near 0V when it is on. The +20VF2 voltage is switched off, disabling the Pulse Amplifier, when the analyzer is not in the AUTO STABILIZER mode. A2R23, A2R24, and A2CR9 provide for the same power dissipation whether +20 VF2 is off or on; this minimizes VCXO drift when the stabilizer is turned on after a period of analyzer operation with the stabilizer off. The pulse from A2Q5 is capacitively coupled to A2Q6, where it is inverted, giving an output at the collector of A2Q6 of −10V when off to near 0V when on. This signal is coupled into the Step Recovery Diode Driver A2Q7, whose output (TPD) is approximately a square wave of 1 MHz going from −10V when on to +0.7V when off. The positive portion of the output pulse is clamped at this level by the sampler diode (not shown) in the Sampler Assembly.

A36A3 Sampler Assembly

Sampler (D) . The Sampler mixes the 2.00 to 4.46 GHz signal from the YTO first LO with the harmonics from the 1 MHz VCXO and produces sum and difference output signals for the Discriminator Assembly. The YTO signal is routed through the First Mixer Assembly and a 2.0 to 4.5 GHz isolator AT2 before being applied to the Sampler. The YTO signal fed through the Sampler is terminated in a 50-ohm load at the rear-panel 1ST LO OUTPUT. The 1 MHz square wave from theVCXO Pulse Amplifier drives a step recovery diode in a differentiator circuit to produce a train of very narrow pulses. The frequency spectrum of the 1 MHz pulse train is a series of 1 MHz harmonics extending through 4.5 GHz. The Sampler mixes the 2460 harmonics between 2.00 and 4.46 GHz with the 2.00 to 4.46 GHzYTO signal. The output is amplified, then filtered through a 500 kHz Lowpass Filter and applied to a 240 kHz Discriminator. The output of the Discriminator is fed back as the ERROR signal to the Tuning Stabilizer Control Assembly, locking the YTO frequency to a harmonic from the VCXO. Immediately after the YTO is stabilized, the output from the Discriminator is 0V and the YTO frequency is offset from the nearest VCXO harmonic by approximatley 240 kHz.

To check the Sampler, do the following with the Analyzer in the stabilized mode: Observe voltage at TPD with an oscilloscope. The signal should be a 1 MHz square wave between −10 ± 1V and +0.7 ± 0.2V with a frequency of 1 MHz ± 10 kHz. If the waveform at TPD has an upper limit approaching +20V, check for an open A2W1 Cable or open Sampler Assembly step recovery diode. The sampler diode may be checked by inserting a wire in the pulse input connector J3 and checking the diode with an ohmmeter. Using an HP 412A Volt-Ohm-Ammeter, on the 100-ohm range, the diode should indicate 100 to 500 ohms with the positive probe to the center conductor and the negative probe to ground. The ohmmeter should indicate greater than 1 megohm in the reverse direction.

NOTE

Other ohmmeters may give different resistance measurements. The actual value depends on the voltage of the ohmmeter.

If the voltage at TPD is zero, check for a shorted cable or a shorted Sampler Assembly step recovery diode by the above test.

A36A1 Discriminator Assembly

Tuning Stabilizer Preamplifier (E) .The Sampler Assembly output is amplified in the Tuning Stabilizer Preamplifier before it is applied to the 500 kHz Lowpass Filter. The Sampler output signal at TPA is a +1.8V to +2.4V dc level with the various output signals from the Sampler Assembly superimposed on the dc signal. A1Q1 and A1Q2 are connected as a FET-input cascode stage which has a high input impedance. A1Q3 is a common emitter output stage.

+5V Regulator (F) .This circuit has a +10V input and a +5V output. A1CR3 puts +5.6V on the base of A1Q10, which in an emitter-follower configuration has a +5V output at its emitter.

500 kHz Low Pass Filter (G) .This is a 500 kHz Chebychef low pass filter. The filter rejects the 1 MHz sampling signal and the unwanted sideband from the Sampler Assembly. The output at TPB is approximately −1 Vdc with a 0.25V peak-to-peak 240 kHz sine wave.

Emitter Follower Buffer Amplifier (H) .A1Q4 and A1Q5 are emitter followers connected to terminate the 500 kHz low pass filter in 1000 ohms and to provide a low output impedance to drive the Fixed Phase Differential Comparator and the Variable Phase Differential Comparator.

Fixed Phase Differential Comparator (I) **and Variable Phase Differential Comparator** (J) .A1L4, A1C11, and A1C12* form a series resonant circuit whose Q is determined primarily by A1R14* and the resistance of A1L4. The values of A1C12* and A1R14* are factory selected to set the frequency and Q of the 240 kHz resonant circuit.

A1U1 is a transistor array consisting of five identical transistors in a 14-pin integrated circuit package. Four of the transistors in A1U1 combined with A1Q6 and A1Q7 make up two independent differential comparators. The differential comparators convert the sine wave input into a square wave output. The phase difference between the two square waves is a function of the input frequency. The outputs are nearly in phase at low frequencies, 90 degrees out of phase at 240 kHz, and nearly out of phase at 500 kHz. These outputs go into an EXCLUSIVE OR circuit (see Figures 8-41 and 8-42).

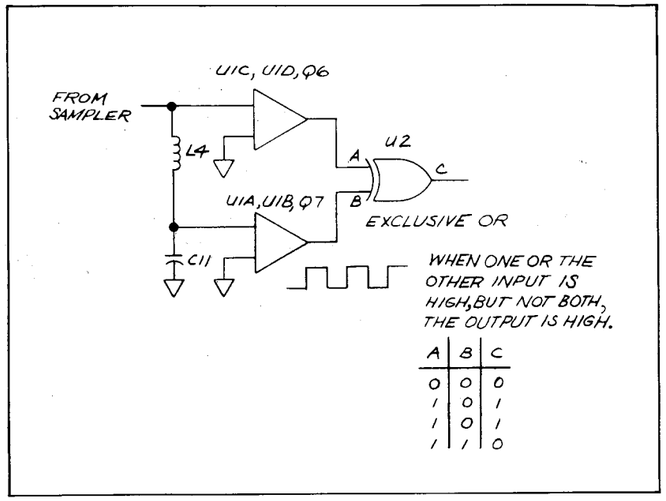

Figure 8-41. 240 kHz Discriminator, Simplified Schematic

EXCLUSIVE OR (K) .A1U2 is a quadruple NAND gate integrated circuit connected as an EXCLUSIVE OR circuit. Its output is high when the two inputs are different, and low when they are the same. The output of the EXCLUSIVE OR circuit at A1TP3 has a dc component with an average value that is a function of frequency (see Figure 8-43).

Pulse Width Controlled Voltage Generator (L) .The output of the EXCLUSIVE OR circuit is applied through A1Q9, A1Q8, and associated circuitry where the signal is buffered, offset, and filtered. Q9 and Q8 are connected as a dc-coupled differential amplifier. The error output signal is a dc voltage related to frequency as indicated in Figure 8.43. Immediately after the YTO (first LO) is stabilized, the ERROR signal will be approximately 0 Vdc. Now if the YTO is increased in frequency because of drift or noise, the ERROR signal will go negative and bring the YTO back to very nearly the same frequency. If the YTO is decreased in frequency, the ERROR signal will go positive. Slightly tuning the coarse TUNING control will have the same effect. R30 and C17 constitute a low pass filter.

DISCRIMINATOR ASSEMBLY TESTING

The operation of the Discriminator Assembly can be tested as follows:

Disconnect 958 wire (ERROR out) from C4. Set AUTO STABILIZER switch OFF.

Connect a 13 mV peak-to-peak signal at a frequency of 10 to 700 kHz from TPA to chassis ground. (It is not necessary to disconnect the Sampler Assembly.)

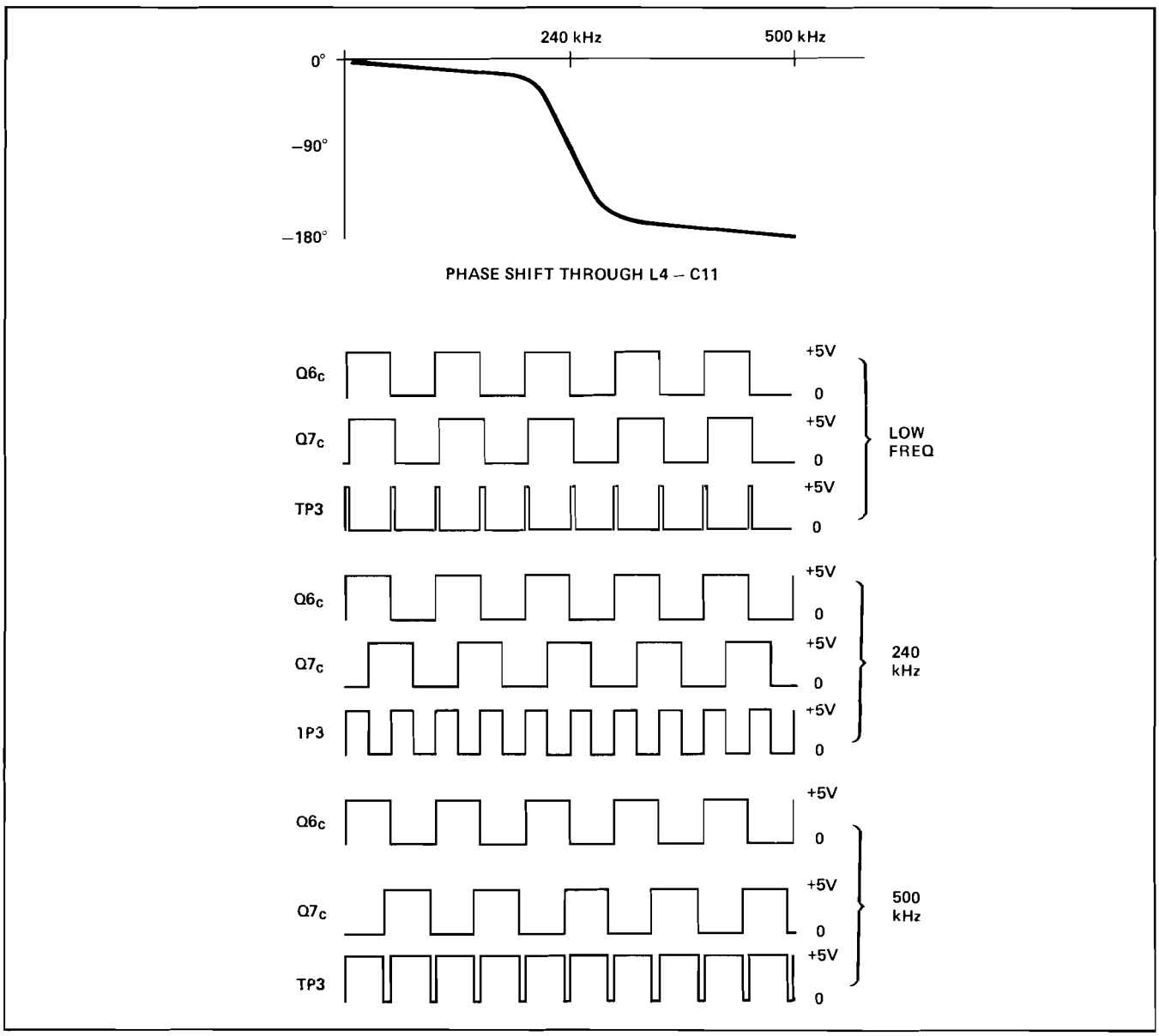

Figure 8-42. Discriminator Wave Shapes

Vary the frequency of the oscillator while observing the discriminator ERROR output at C4. The discriminator output should vary as shown in Figure 8-00. If the correct output is not obtained, perform the following tests with the oscillator still connected to TPA.

The signal at A1TP1 should be a sine wave, 0.15V to 0.3V peak-to-peak, for frequencies between 1 and 500 kHz. The voltage level should decrease rapidly as the frequency is increased above 500 kHz. Observe signals at collectors of A1Q6 and A1Q7 with a dual-channel oscilloscope.The signals should be 0 to +5V square waves. As the oscillator frequency is varied, the phase relationship of the square waves should vary as follows: At low frequency, the square waves should be almost in phase; at 240 kHz they should be approximately 90 degrees out of phase; at frequencies ap-

Scans by ARTEK MEDIA =>

proaching 500 kHz they should be nearly 180 degrees out of phase. Also note how the average value of the EXCLUSIVE OR output at A1TP3 increases as the oscillator frequency is increased (see Figure 8-43).

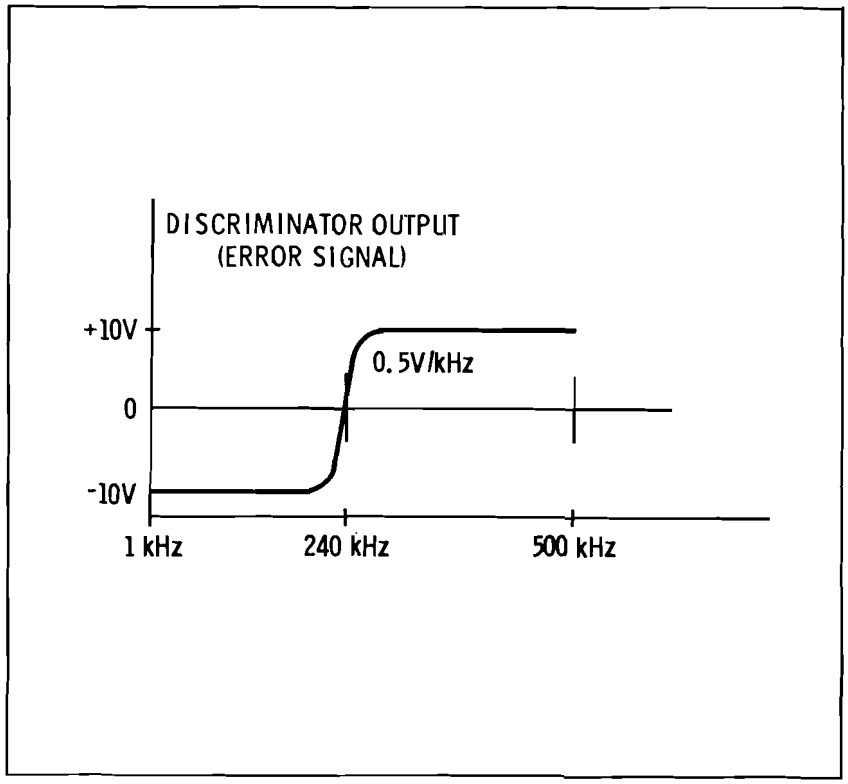

Figure 8-43. Discriminator Output Error Signal

Scans by ARTEK MEDIA =>

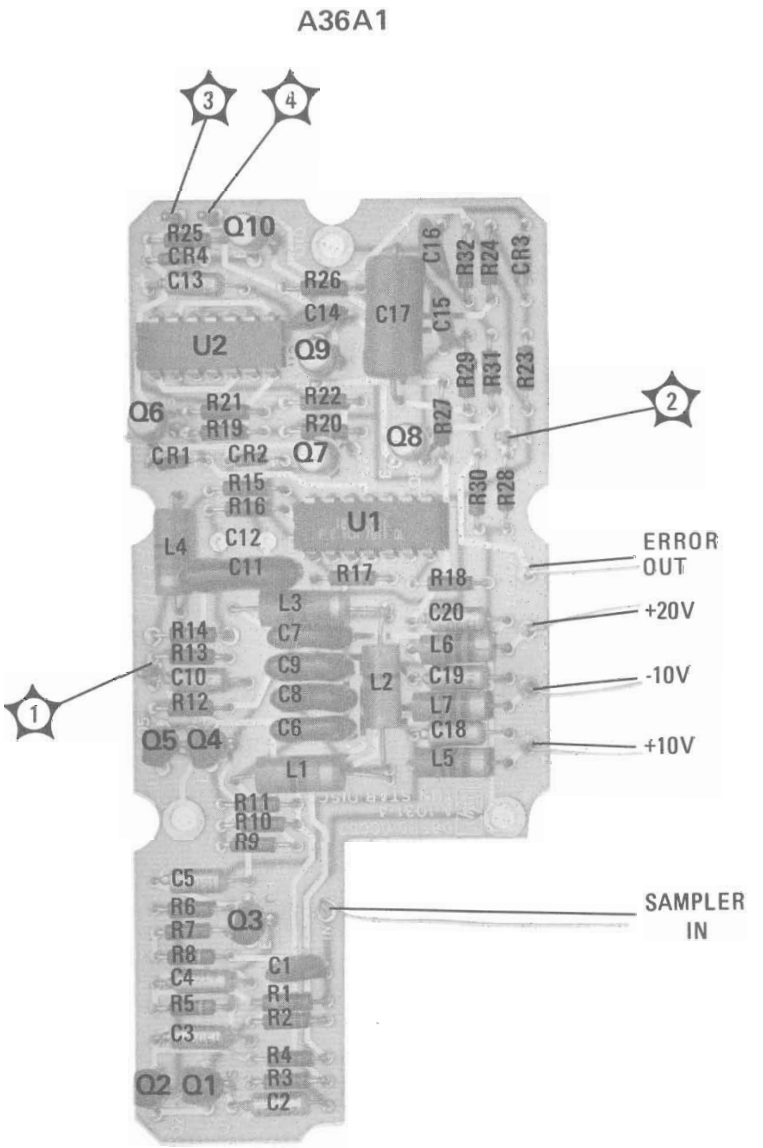

Figure 8-44. A36A1 Discriminator Assembly, Component Locations

Scans by ARTEK MEDIA =>

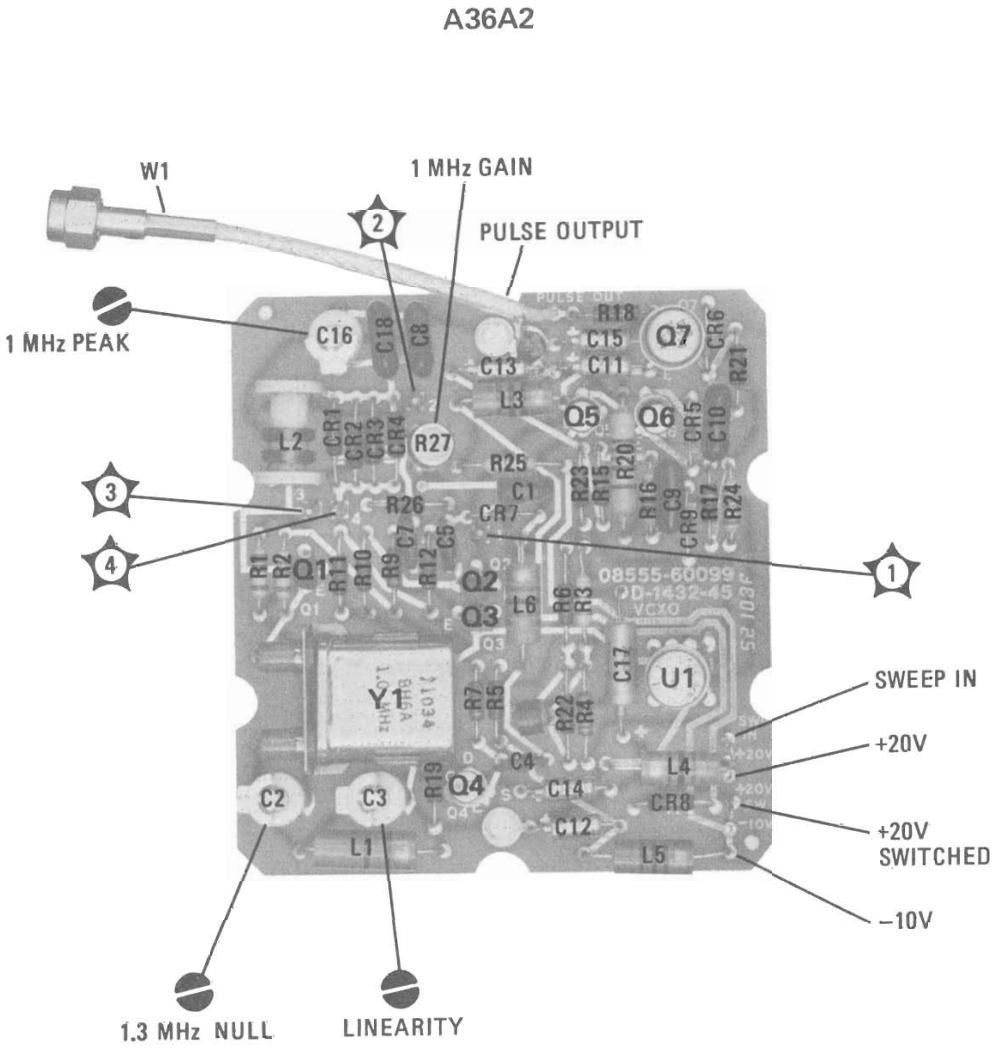

Figure 8-45. A36A2 VCXO Assembly, Component Locations

Scans by ARTEK MEDIA =>

Scans by => ARTEK MEDIA © 2003-2005

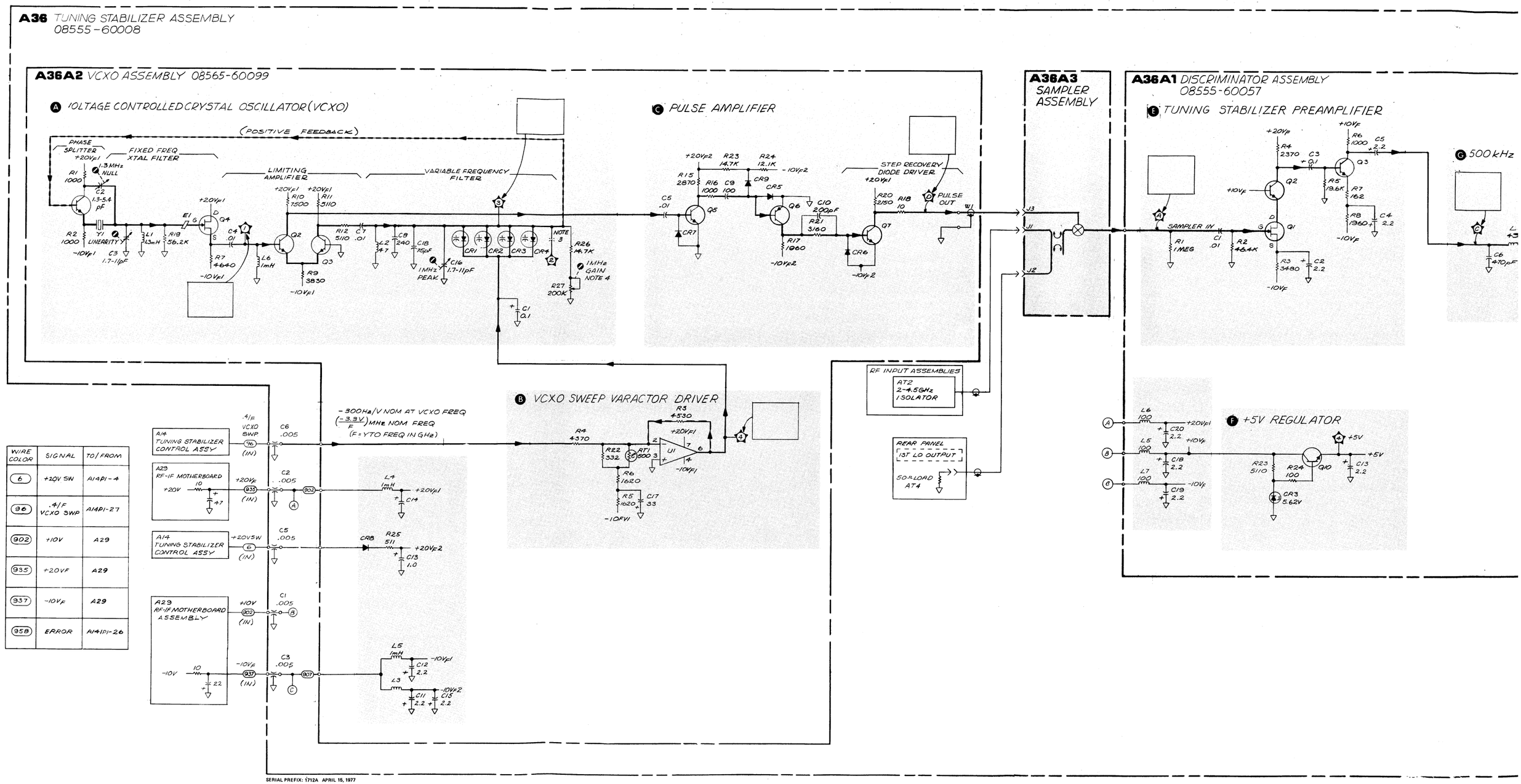

WIRE COLOR	SIGNAL	TO/FROM
6	+20V SW	A14P1-4
96	.4/F VCXO SWP	A14P1-27
902	+10V	A29
935	+20VF	A29
937	-10VF	A29
958	ERROR	A14P1-26

Scans by => ARTEK MEDIA © 2003-2005

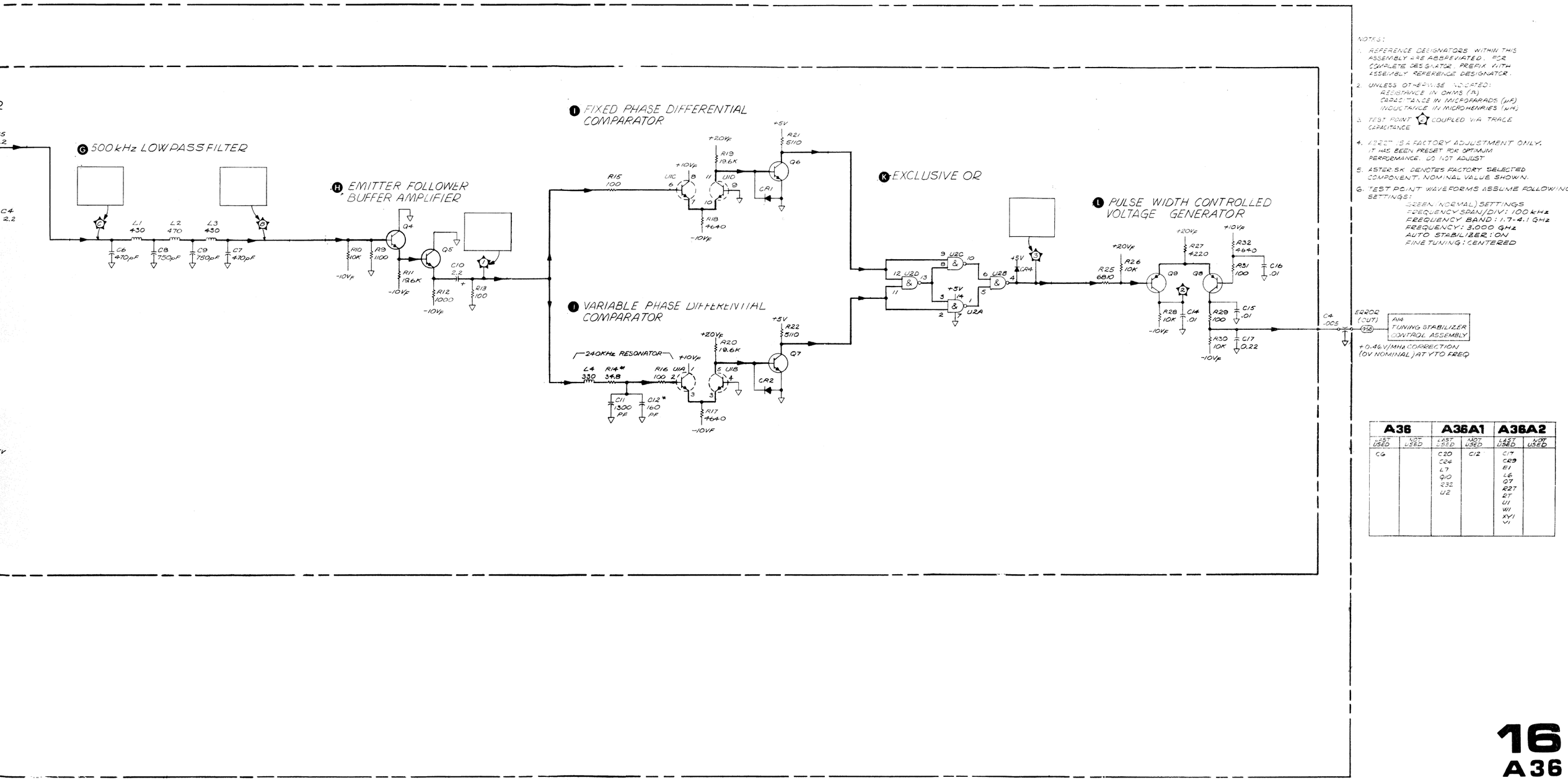

NOTES:

1. REFERENCE DESIGNATORS WITHIN THIS ASSEMBLY ARE ABBREVIATED. FOR COMPLETE DESIGNATOR, PREFIX WITH ASSEMBLY REFERENCE DESIGNATOR.
2. UNLESS OTHERWISE INDICATED:
   RESISTANCE IN OHMS (Ω)
   CAPACITANCE IN MICROFARADS (μF)
   INDUCTANCE IN MICROHENRIES (μH)
3. TEST POINT ⬠ COUPLED VIA TRACE CAPACITANCE
4. A2R27 IS A FACTORY ADJUSTMENT ONLY. IT HAS BEEN PRESET FOR OPTIMUM PERFORMANCE. DO NOT ADJUST
5. ASTERISK DENOTES FACTORY SELECTED COMPONENT. NOMINAL VALUE SHOWN.
6. TEST POINT WAVEFORMS ASSUME FOLLOWING SETTINGS:
   SCREEN (NORMAL) SETTINGS
   FREQUENCY SPAN/DIV: 100 kHz
   FREQUENCY BAND: 1.7-4.1 GHz
   FREQUENCY: 3.000 GHz
   AUTO STABILIZER: ON
   FINE TUNING: CENTERED

A36		A36A1		A36A2	
LAST USED	NOT USED	LAST USED	NOT USED	LAST USED	NOT USED
C6		C20 C24 L7 Q10 R32 U2	C12	C19 C29 E1 L6 Q7 R27 Q7 U1 W1 XY1 V1	

16
A36

Figure 8-46. A36 Tuning Stabilizer Assembly, Schematic Diagram

Scans by => ARTEK MEDIA © 2003-2005

SERVICE SHEET 17

A12 DVM ANALOG ASSEMBLY, CIRCUIT DESCRIPTION

Figures 8-47 and 8-48 and 8-49 show a block diagram, a simplified timing diagram, and an overall timing diagram for the Digital Voltmeter (DVM). The basic measurement technique is to apply the input voltage to an integrator for a fixed time, charging the integrating capacitor. Then the integrator is given a known voltage of the opposite polarity to discharge the integrating capacitor. The time it takes to discharge the capacitor is proportional to the input voltage and is measured with a precise digital counter. If the magnitude of the input voltage equals the reference voltage, the discharge time will equal the fixed, known charging time.

The designations T_1, T_2, etc., in the timing diagram refer to time intervals, not points in time.

In the block diagram (Figure 8-47), the CENTER FREQ, −REF V, and +REF V (not shown on the schematic) voltages are always present at the inputs to their respective switches. (In the timing diagram, the CENTER FREQ voltage is 12.000V, corresponding to a reading of 12.000 GHz.) At the beginning of T_1, the Input Switch is closed and the CENTER FREQ voltage is applied to the Input Amplifier. During T_1, the Input Amplifier settles so that a stable voltage will be presented to the Integrator Switch. At the beginning of T_2, the Integrator NORM Switch closes, and the integrating capacitor is allowed to charge until the end of T_2, at which time the Input Switch and Integrator Switch are opened and the −REF V Switch closed. During T_3, the Input Amplifier is again allowed to settle. At the beginning of T_4, the Integrator Switch is again closed, commencing the discharge of the Integrator capacitor. The switch remains closed until the Integrator output reaches 0V. This will happen very quickly for input levels near 0V but will extend into the early part of T_6 for the maximum level corresponding to 22 GHz. After this zero crossing occurs, the Auto Zero function is initiated by the closing of the Auto Zero Switch, the Auto Zero Sampler Switch, and the FAST integrator switch. During the Auto Zero time the offset error in the system is placed on the Auto Zero capacitor. At the end of T_6 (beginning of T_1) the Auto Zero function is terminated, but the offset error remains on the Auto Zero capacitor for the duration of the measurement cycle.

The generation of timing signals for the switches and the measurement of the discharge time interval are performed by the digital timing and control circuits in the DVM Digital Assembly.

Input Switch A

The CENTER FREQ voltage present at the input to the Input Switch is divided by ten by the voltage divider R1, R2 to yield a voltage that has a scale factor of 10.000 GHz per volt. This voltage is transferred to the Input Amplifier during T_1 and T_2 by the FET switch Q11. During T_1 and T_2 a TTL low on the INPUT ENABLE line turns on the switch driver Q14 and CR1 is then back-biased. The gate of Q11 is held at the input level, since R7 is tied to a feedback divider R39, R40, which in turn is tied to the output of the Input Amplifier. During T_3 through T_6, the INPUT

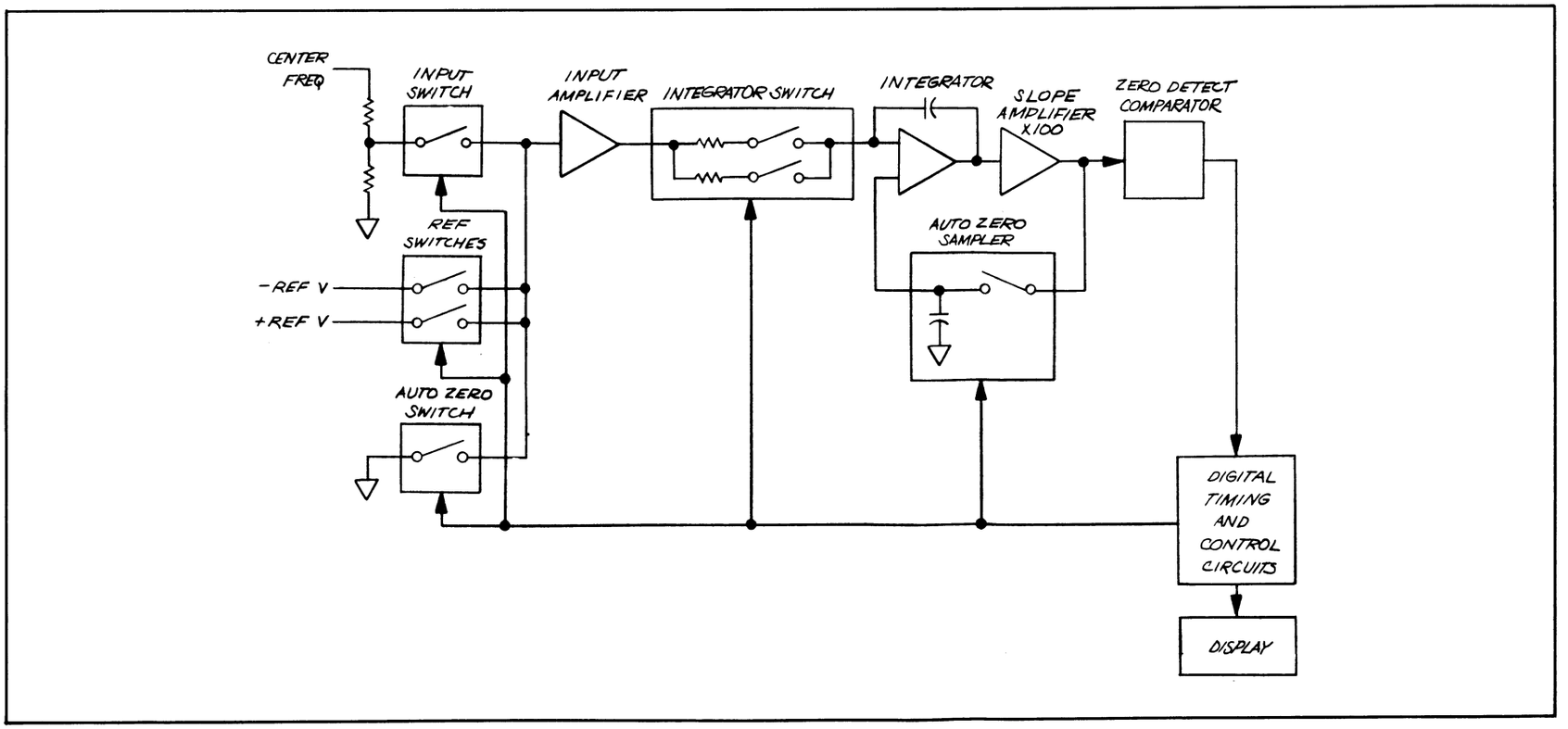

Figure 8-47. DVM Block Diagram

Scans by => ARTEK MEDIA © 2003-2005

ENABLE goes high, turning off Q14, which causes CR1 to conduct, turning Q11 off.

Reference Switches (B)

The operation of the Reference Switches is similar to that of the Input Switch. If the CENTER FREQ voltage is positive, the digital control circuits will cause the negative reference switch to conduct; if the input is negative, the positive reference switch will conduct. In both cases the switches will conduct from the beginning of T_3 until the integrator passes through zero. Since negative input voltages need not be measured accurately, the positive 1.0V reference is simply derived from a voltage divider off the +5V supply. The positive input voltage must be very precisely measured; therefore, the −1.0V reference is derived from an external −10V reference supply. R18 through R22 divide the −10V down to −1.0V and allow for a small adjustment around −1.0V.

Auto Zero Switch (C)

This switch is similar to the other switches except that it is simplified by the fact that it must switch only a 0V level. It is turned on by the digital control circuits after the Integrator has reached 0V output. This can occur during T_4, T_5, or the first part of T_6. It is turned off at the end of T_6 regardless of when it was turned on.

Input Amplifier (D)

The Input Amplifier is a high input impedance, dc amplifier with a voltage gain of approximately 3.5. The current from the dual-input FET Q9 is supplied by current source Q8 and is balanced by R37. The output of the amplifier supplies the signal to the Integrator Switch circuit; it also supplies the feedback voltage for the Input and Reference FET switches. The gain of this amplifier need not be precisely set, since only the ratio of the input and reference voltages must be preserved; not their actual levels.

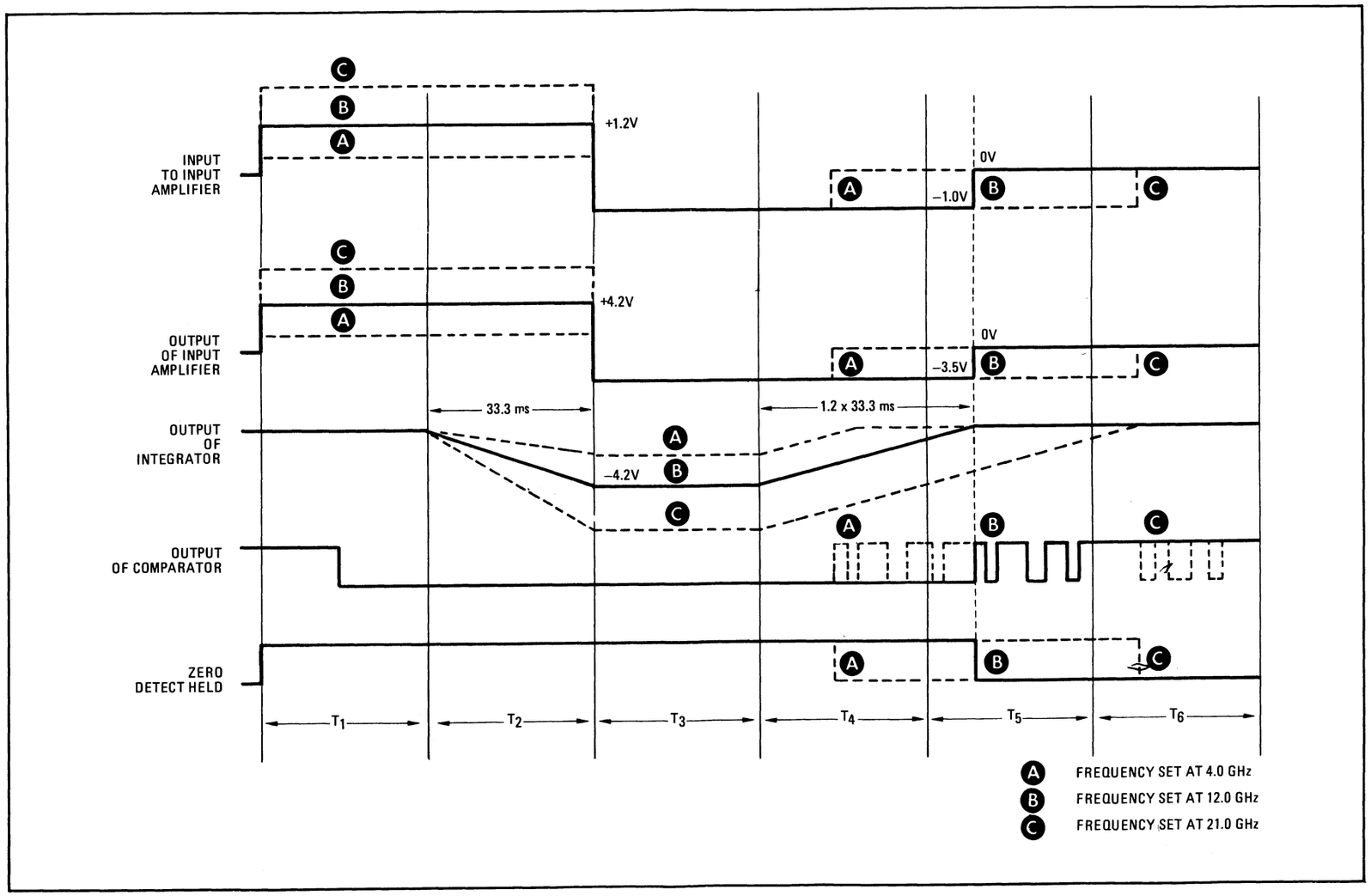

Figure 8-48. Simplified Timing Diagram

Integrator Switch (E)

There are two FET switches in the Integrator Switch cicuit. The "normal" switch Q3 is used during the normal measurement cycle, while the "fast" switch Q4 is used to speed up the response of the Auto Zero cycle. Since the Integrator resistors R30 and R31 are placed before the switches, the switches need only pass signals very near ground level, simplifying the switch drivers. Logic gates U6B, U6C, and U7D act as a decoder to turn on the "normal" switch Q3 during T_2, and the discharge period of the integrator. The "fast" switch Q4 uses the same driver as the Auto Zero Switch and is on from the time the integrator crosses zero until the end of T_6.

Integrator (G)

The Integrator consists of a dual-FET input stage Q5, an op amp U2, and the integrating capacitor C10. The charging current for C10 is equal to the current into the integrator, which is determined by the output of the Input Amplifier and either resistor R30 or R31. The non-inverting input to the integrator is not grounded, as would be expected, but instead is tied to the error voltage stored on the Auto Zero capacitor C21.

Slope Amplifier X100 (J)

The Slope Amplifier X100 circuit consists of two stages (U3 and U4), each having a gain of 10. The U3 must be free of noise and thus has heavy power-supply filtering (L1, L2, and C15). The U4 output is clamped to ±1.2V by diodes CR7 through CR10 so that it will recover rapidly from an overload. The output of the Slope Amplifier X100 circuit will change only when the integrator output is near 0V; otherwise it will be clamped to ±1.2V.

Zero Detect Comparator (L)

The Zero Detect Comparator is a high-speed voltage comparator that has an output compatible with TTL logic. In order to accommodate small system offsets, the exact voltage level that will cause a transition of the output is adjusted with the ZERO ADJ potentiometer R56.The HYST adjustment R53 feeds a portion of the input amplifier output to the comparator. It is made necessary by the fact that the integrating capacitor has dielectric absorption. To eliminate this effect the discharge time measurement is actually started 42 μsec after the beginning of T_4. (This is done by the Delay Timer circuit in the DVM Digital Assembly.) To compensate for this delay, a portion of the reference voltage present at the time of the discharge zero crossing is applied to the comparator through resistors R52, R53, and R55. The level is adjusted by R53.

Zero Detect Gates (K)

The Zero Detect Gates cause either polarity of zero crossing of the integrator to generate the same polarity logic transition, and they ensure that only the discharge zero crossing is recognized by the following logic. The POL line (U6A pin 1) from the DVM Digital Assembly indicates which reference polarity was used for the present measurement cycle. (A low indicates that +REF V was used, and vice versa.) This signal, in conjunction with the comparator output, causes the output of U6A to always have a low-to-high transition for the discharge zero crossing. U9B inverts the discharge transition and causes the opposite transition to always occur at the beginning of T_1.

The TEST-NORM switch is a troubleshooting aid. The TEST position simulates a zero crossing at the beginning of T_5 to generate a normal sequence of logic levels to the FET switch drivers. This will be recognized by the logic circuitry as −10.000 on the FREQUENCY GHz readout.

Zero Detect Catcher (M)

Since the reference voltage is removed when the discharge zero crossing occurs, the output of the comparator may oscillate following the first transition. The Zero Detect Catcher latches after the initial high/low transition. The latch is reset at the beginning of T_1 and remains high until the next valid discharge zero crossing.

State Counter (F)

The State Counter consists of three D flip-flops which generate signals A, B, and C. Signal A is used to generate signal B, and signal B is used to generate signal C. The inverse of signal C (i.e., C) is then used to produce a signal A (via gates U7C and U9C). The various combinations of signals A, B, and C determine the "state code" of the instrument timing. State codes 101 and 010 are illegal and will be entered only if caused to do so by transient pulses during initial turn-on. If an illegal state is entered, the flip-flops will be cleared on the next reset pulse. This sets the counter to state 000, at which time an Auto Zero cycle occurs. The timing sequence then continues in its normal fashion.

Display Ramp Generator Transition Gate (N)

This gate is functionally part of the DVM Digital Assembly, although it is physically located on the A12 board.

Scans by ARTEK MEDIA =>

Scans by => ARTEK MEDIA © 2003-2005

Using a two channel oscilloscope (HP Model 180A/1801A/1821A) or equivalent, connect signal A to Channel B input, set oscilloscope to "CHOP", trigger on Channel B. Use Channel A to check the various test points. Use 20 ms/cm time base.

All measurements were taken with Frequency set at 12.0 GHz.

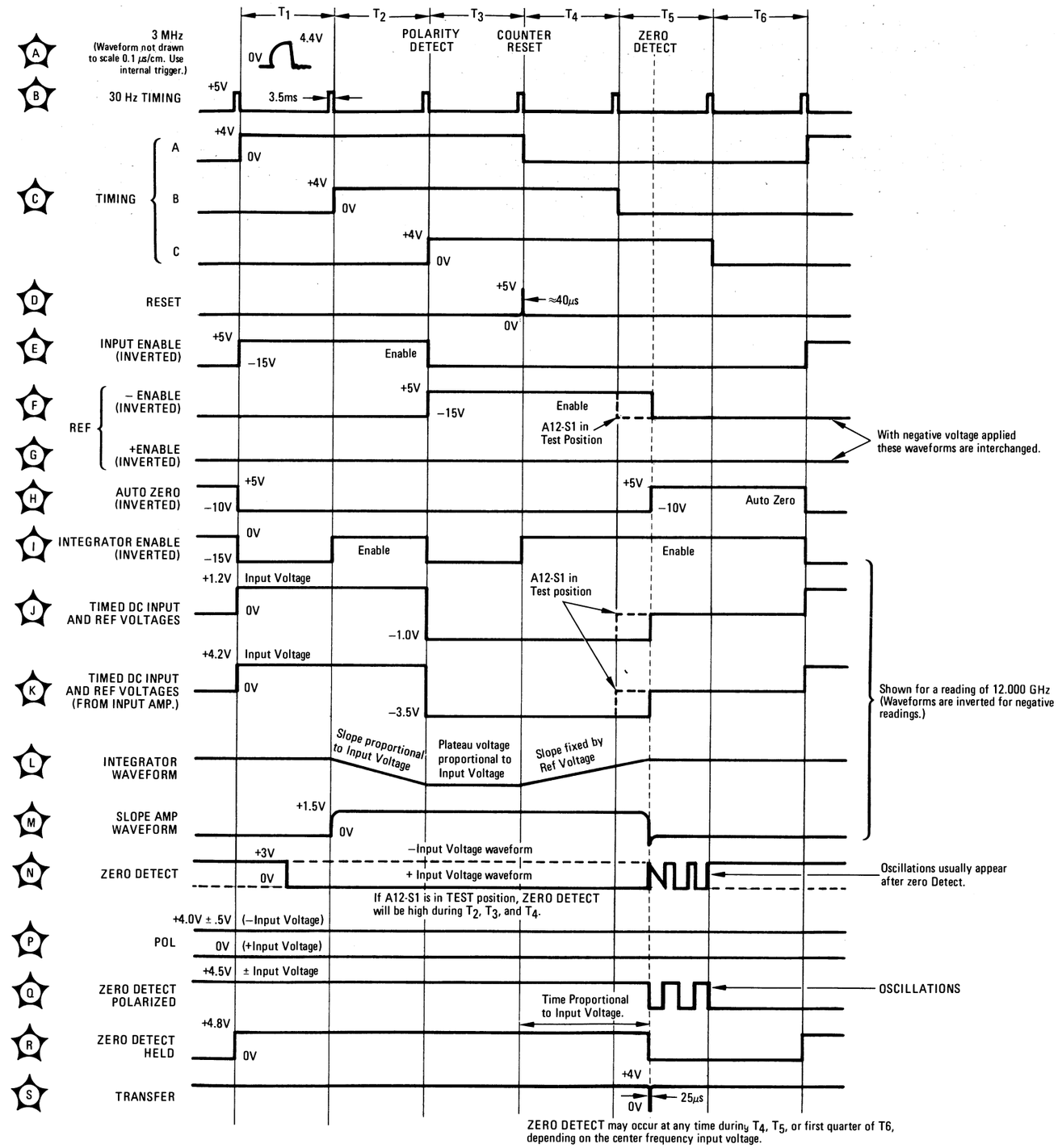

Figure 8-49. Measurement Timing Diagram for A12 DVM Analog Assembly and A11 DVM Digital Assembly

A12

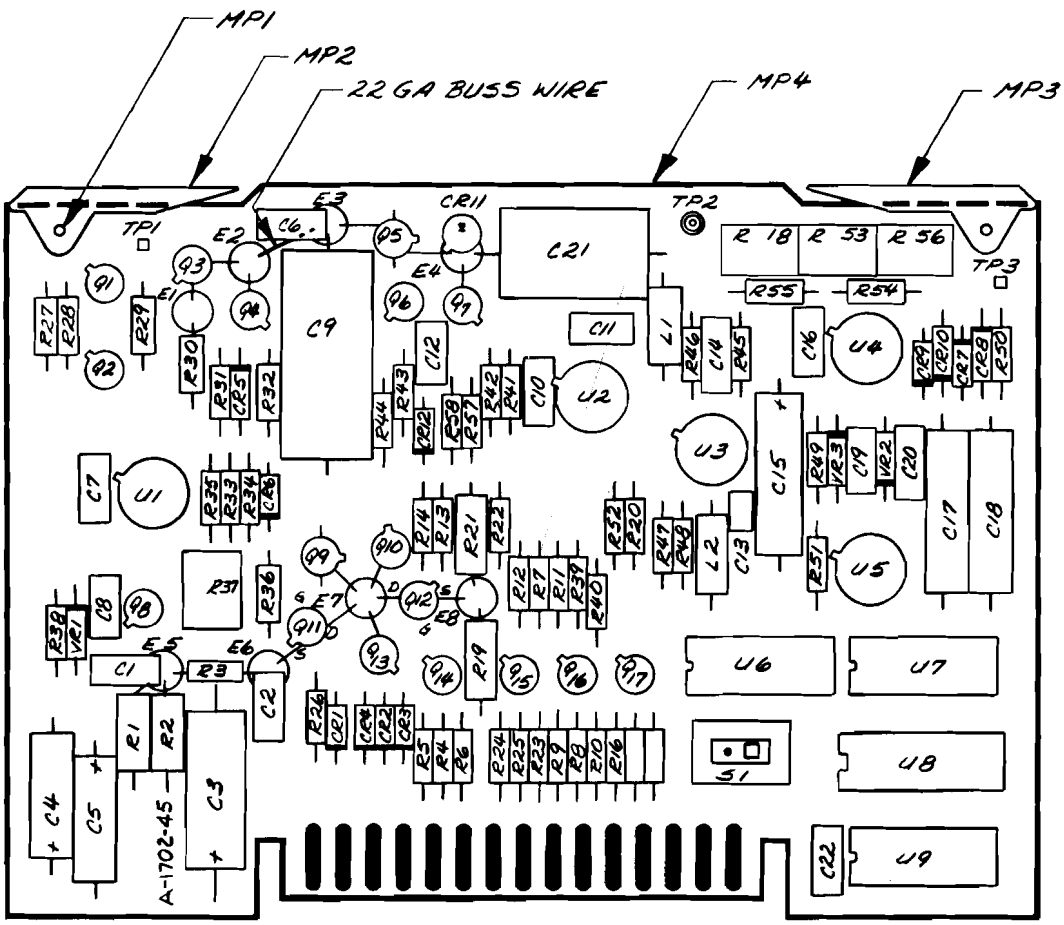

Figure 8-50. A12 DVM Analog Assembly, Component Locations

Scans by ARTEK MEDIA =>

Scans by => ARTEK MEDIA © 2003-2005

A12 DVM ANALOG ASSEMBLY
08565-60016

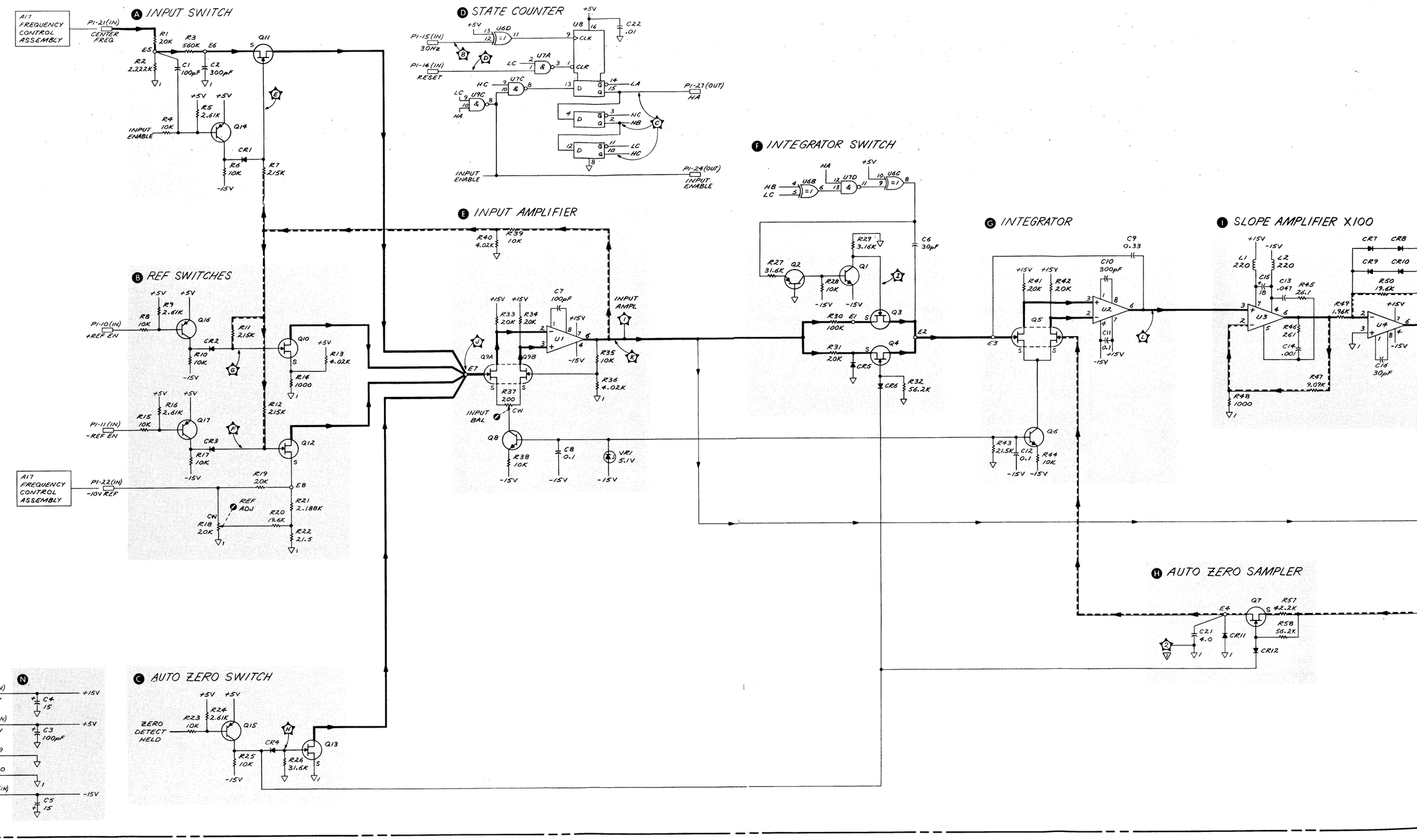

P1

PIN	SIGNAL	TO/FROM	FUNCTION BLOCK
1	+5.2V		N
16	+5.2V		N
2	-15V		N
17	-15V		N
3	+15V		N
18	+15V		N
4	▽		N
19	▽		N
5	▽1		N
20	▽1		N
6	NC		
21	CENTER FREQ	A17P1-36	A
7	NC		
22	-10V REF	A17P1-8	B
8	NC		
23	NC		
9	ZERO DET HELD	A11P1-24	L
24	INPUT ENABLE	A11P1-22	D
10	+REF EN	A11P1-25	B
25	NC		
11	-REF EN	A11P1-26	B
26	NC		
12	POL	A11P1-27	K
27	HA	A11P1-12	D
13	ZERO DETECT	A11P1-28	K
28	RAMP GEN ENABLE	A11P1-10	M
14	RESET	A11P1-29	D
29	SCN/2	A11P1-11	M
15	30Hz	A11P1-30	D
30	SCN/4	A11P1-13	M

SERIAL PREFIX: 1712A APRIL 15, 1977

Scans by => ARTEK MEDIA © 2003-2005

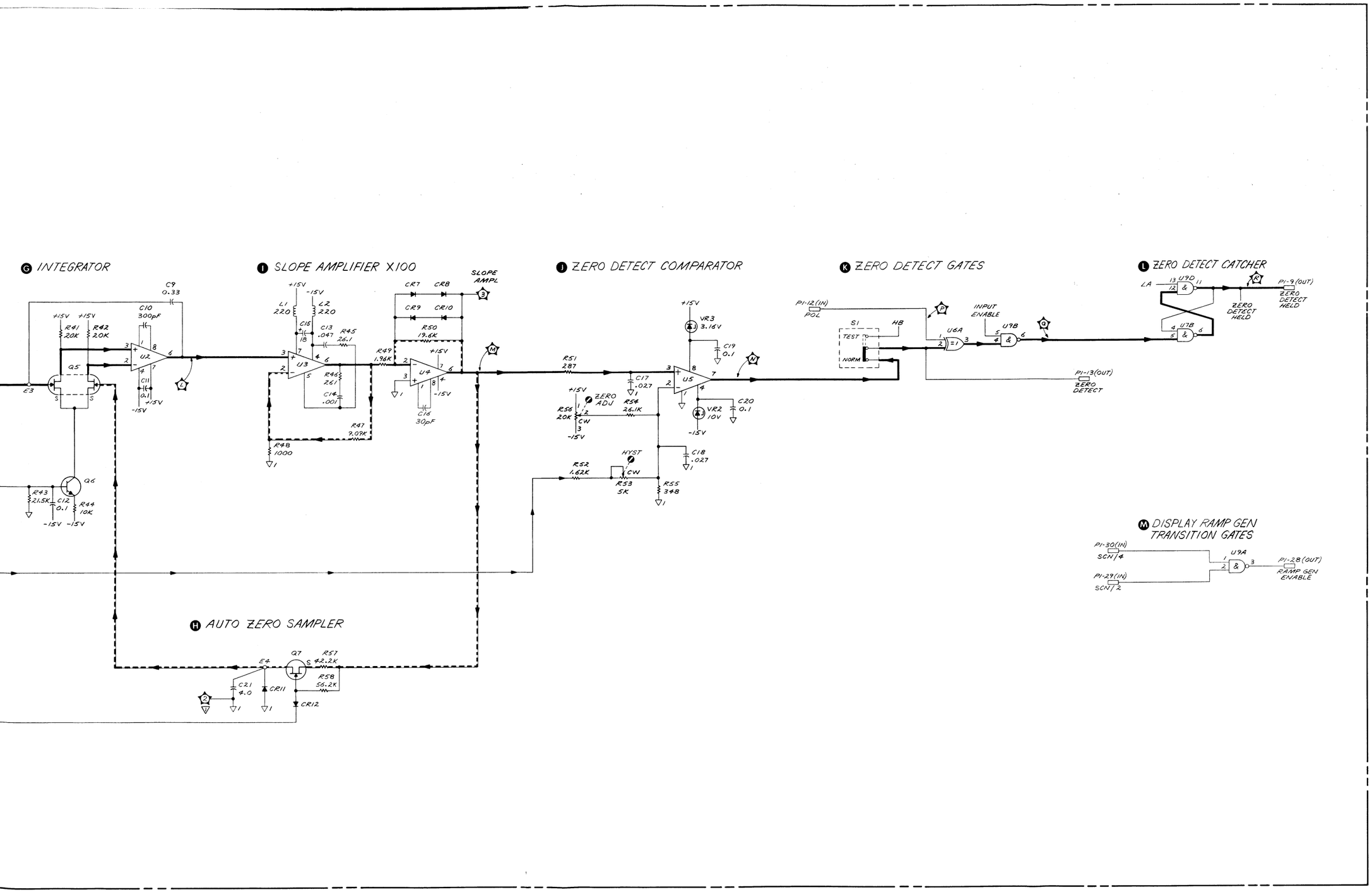

NOTES:

1. REFERENCE DESIGNATORS WITHIN THIS ASSEMBLY ARE ABBREVIATED. FOR COMPLETE DESIGNATOR, PREFIX WITH ASSEMBLY REFERENCE DESIGNATOR.
2. UNLESS OTHERWISE INDICATED: RESISTANCE IN OHMS (Ω) CAPACITANCE IN MICROFARADS (μF) INDUCTANCE IN MICROHENRIES (μH)
3. ALL INPUTS AND OUTPUTS INTERFACE WITH THE A11 DVM ASSY EXCEPT FOR CENTER FREQ AND -10V REF.
4. UNLESS OTHERWISE INDICATED DIGITAL IC'S WILL HAVE THE FOLLOWING +5V AND GND CONNECTIONS

NO PINS ON PKG	+5V	GND
14	14	7
16	16	8

REFERENCE DESIGNATORS

A12	
LAST USED	NOT USED
C21	
CR12	
E8	
L2	
Q17	
R58	
U9	
VR3	

17
A12

Figure 8-51. A12 DVM Analog Assembly, Schematic Diagram

Scans by => ARTEK MEDIA © 2003-2005

SERVICE SHEET 18

A11 DVM DIGITAL ASSEMBLY, CIRCUIT DESCRIPTION

The DVM Digital Assembly has two functions. It includes most of the circuitry for timing and control of the DVM Analog Assembly (refer to the circuit description for that assembly); and it provides timing and control for the center frequency (FREQUENCY GHz) and bezel displays.

In the following descriptions, refer to the schematic and to the timing diagram, Figure 8-52.

DVM 3 MHz Clock Oscillator C

The crystal-controlled DVM 3 MHz Clock Oscillator drives the Delay Timer and the DVM Counter. The output goes through open-collector buffer Q4.

Delay Timer F

The Delay Timer has two 4-bit counters, U2 and U3, configured to provide a delay of 128 clock pulses. The delay commences at the beginning of T_4 and provides a positive TTL RESET output that lasts 42 μsec. The RESET output goes to the DVM Counter and to the DVM Analog Assembly.

Data Transfer Timer E

The Data Transfer Timer has two functions: (1) It stops the clock to the DVM Counter when the ZERO DETECT HELD line from the DVM Analog Assembly goes low, and (2) it provides the strobe signal to transfer the count of the DVM Counter into storage latches.

When the ZERO DETECT HELD line goes low, the clock input to the DVM Counter is forced low, allowing the count of the DVM Counter to stabilize.

After the count has stabilized, the strobe line goes low, transferging the data into the buffer latches of counter U16. The strobe line then goes high, and the latches hold the count, permitting the clock input to be re-enabled.

DVM Counter H

The DVM Counter has two functions: (1) It measures the discharge time of the Integrator in the DVM Analog Assembly, and (2) it provides 30 Hz pulses to drive the State Counter in the DVM Analog Assembly.

Counter U16 consists of a six-decade BCD counter, six BCD latches, and a 6-to-1 BCD multiplexer. The clock input accepts the signal from the DVM 3 MHz Clock Oscillator, which is controlled by the Data Transfer Timer. The RESET input sets the counter to all zeroes when it receives a high from the Delay Timer. The strobe input transfers the count from the counter to the storage latches in U16 when the strobe line is pulled low by U14C of the Data Transfer Timer.

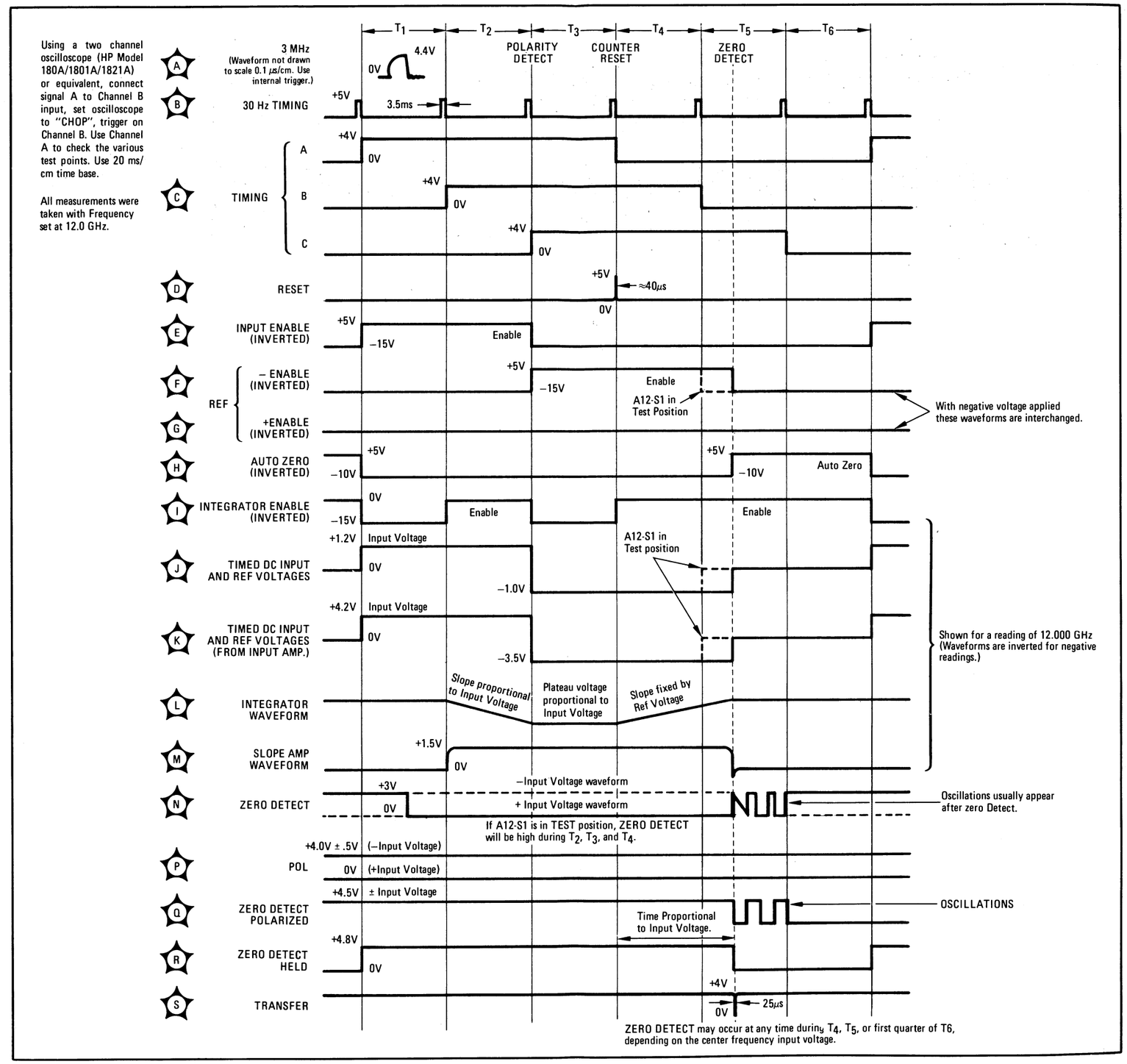

Figure 8-52. Measurement Timing Diagram for A11 DVM Digital Assembly and A12 DVM Analog Assembly

Scans by => ARTEK MEDIA © 2003-2005

When the FREQ DISPLAY HOLD line from the Display Switch Assembly forces the strobe input high, the latches accept no further data and freeze the bezel display so that the readout is constant during photography.

The X, Y, and Z inputs of U16 receive a 3-bit binary count from the Display Scanner Counter Decoder. This count determines which decade the multiplexer selects and sends to the outputs QA, QB, QC, and QD.

The output of the fifth decade (carry) is always present on U16 pin 7 as a 30 Hz pulse train. When the pulse is low, Q5 is off and a high-level output is sent as a clock pulse to the State Counter in the DVM Analog Assembly. A low-to-high transition out of Q5 advances the State Counter. The zener diodes VR1 and VR2 respectively provide −5V and −12V supply voltages for U16.

The resistors in U23 provide pull-up to +5V and set the high-level inputs X, Y, and Z and outputs QA, QB, QC, and QD of U16.

Reference Gate (A)

The Reference Gate provides the signal to turn on +REF EN or −REF EN to the DVM Analog Assembly. When ZERO DETECT HELD, INPUT ENABLE, and POL are all high, +REF EN goes low, turning on the +REF switch in the DVM Analog Asembly. When ZERO DETECT HELD and INPUT ENABLE are high and POL is low, −REF EN goes low, and the −REF switch in the DVM Analog Assembly is turned on.

Polarity Storage (B)

The Polarity Storage flip-flop U22B examines the state of the ZERO DETECT line at the beginning of T_3. When the CENTER FREQ voltage going to the DVM Analog Assembly is positive, ZERO DETECT is low, and POL (the output of U22B) will go low on the positive transition of the INPUT ENABLE line. (Refer to the Reference Gate description for the function of the POL line.)

Display Scanner Oscillator (D)

The Display Scanner Oscillator, a CMOS RC oscillator, provides a 6.4 kHz square-wave output through the TTL buffer U10E. The Display Scanner Oscillator provides the scanner clock (establishes the strobe rate) for FREQUENCY GHz readout and bezel displays on the front panel. The output of this circuit goes to the Display Scanner Counter Decoder and to the Driver Current Ramp Generator.

Display Scanner Counter Decoder (G)

The Display Scanner Counter Decoder has two functions: (1) It provides a one-of-six decoded output to drive the center frequency display digits (FREQUENCY GHz readout), and (2) it provides the timing information for the Drive Current Ramp Generator through A12U9A and A11U9B. (The Display Ramp Generator Transition Gate A12U9A is shown on the schematic for the DVM Analog Assembly because it is physically located on that board; however, it is functionally part of the DVM Digital Assembly.)

The flip-flops U22A and U21A generate the SCN/2 and SCN/4 outputs to A12U9A.

U21B, U21C, and U21D count from binary 0 to binary 5. The number goes to U15 and is decoded to a one-of-six output to the Display Digit Driver.

Illegal Code Blanking (I)

The Illegal Code Blanking circuit blanks the least significant digit from the DVM Counter, allowing a decimal point for the bezel display to be generated at that time. If binary numbers 6 or 7 were to be erroneously generated by the Display Scanner Counter Decoder, they would be blanked.

Display Digit Driver (J)

The Display Driver receives outputs from the Display Scanner Counter Decoder, boosts current levels, and generates cathode drive for the center frequency display (FREQUENCY GHz readout) on the front panel. Since the seven-segment displays are of the common-cathode type, the Display Digit Driver must sink the current from the lit segments of the driven digit. One of the eight Darlingtons in U1 is enabled when the base is supplied current through its associated base resistor. This, in turn, requires that the open-collector inverter associated with the driver have a low input from the Display Scanner Counter Decoder.

The output voltage level of the Darlingtons is not well defined. When a Darlington is off and no segments are lit by another driver, the output will be pulled to a level near GND by the output pulldown resistor. If, however, another driver is lighting segments, the level will be between +1.5V and +2.0V on the outputs of the Darlingtons that are off. When a Darlington is on, its output level will be about +0.6V if no segment is lit, and between +1.0V and +1.5V if segments are lit, depending on the number of segments lit and individual component parameters.

Outputs HCF1, HCF2, HCF4, and HCF5, and LCF0 and LCF3 from the inverters go to the Readout Driver Assembly for the bezel display.

Drive Current Ramp Generator (P)

The Drive Current Ramp Generator generates a drive current ramp signal to the Center Frequency Segment Drivers and to the Decimal Point Driver.

The output of the Display Scanner Oscillator and the lines SCN/2 and SCN/4 are decoded by the Display Ramp Generator Transition Gate A12U9A (physically located in the DVM Analog Assembly) and U9B to generate a positive-going pulse (about 0.08 ms) which has a negative transition at the same time as the segment information changes states. The pulse is initiated approximately every 0.6 ms. This TTL input goes through resistors R17, R18, and R19 to generate roughly a ±1 mA current at the base of Q2. Since Q2 is connected as an integrator, this current will approximately equal the charging current for C16, generating a nominal rise and fall time of about 50 μsec at the collector of Q2. The output drive capability is increased by Q3, which acts as an emitter follower and has an output swing from GND to approximately +14V. C17 and R22 at the collector of Q3 prevent the ramp current from getting on the +15V power supply line. The output is of opposite polarity from the input and is delayed by the ramp rise and fall times. The ramp signal controls the rise and fall times in the Center Frequency Segment Drivers and the Decimal Point Driver.

Display Latches

To ensure that BCD output data from the DVM Counter will change state only while the output of the Drive Current Ramp Generator is low, the BCD data from the counter is stored in latch U19 until the output of the Drive Current Ramp Generator reaches its lowest level.

Seven Segment Decoder (L)

The Seven Segment Decoder converts 4-bit BCD data to seven-line segment data to the Readout Driver Assembly and to the Center Frequency Segment Drivers.

If the output of the Illegal Code Blanking circuit (the BI input to U6) is low, all segment lines will go high. If a BCD zero occurs for the most significant digit of the display, a low on the ripple blanking input (RBI) line will cause all segment lines to go high, blanking that digit.

Minus Sign Gate (M)

When the POL line goes high (a negative number is to be displayed), the "g" segment line is brought low during the most significant digit to light the "g" segment (minus sign).

Center Frequency Segment Drivers

The seven-segment displays (FREQUENCY GHz) are of the common-cathode type. This means that a current must be sourced to each of the segment LEDs to light it. This current is provided by t e seven transistors of U7, which are all connected in an emitter-follower configuration. The magnitude of the current is determined by resistors in the Frequency Display Assembly. For any given transistor, if the output of the Drive Current Ramp Generator is high (approximately +14V) and the open-collector

inverter tied to its base is not conducting (the input from the Seven Segment Decoder is low), then base current will flow through its associated base resistor in U12 and the transistor will turn on, causing the segment to light. The output levels on lines CFa through CFg will then be slightly less than +5V.

When the Seven Segment Decoder changes state on the negative-going clock transition, the output of the Drive Curent Ramp Generator will be low (approximately GND), and all segment drivers will be off. Just before a change of state, the output of the Drive Current Ramp Generator will ramp down from a high to a low and gradually turn the segment drivers off. Immediately following a change of state, the ramp will go from a low to a high, gradually turning the segment drivers on.

In this way the relatively large currents involved in the display will have controlled rise and fall imes and will not generate the electrical interference usually associated with strobed digital displays.

Decimal Point Gate N

The Decimal Point Gate has two inputs from the FREQUENCY BAND GHz switch: B7 and B8. In the EXT MIXER mode, one of the band lines (B7 or B8) will be high (+15V). The inputs are OR by U17A and U10A to produce a high TTL level when in either of the external mixing bands.

Decimal Point Driver Q

The Decimal Point Driver supplies current to the decimal point input of the Center Frequency Display Assembly. If the output of the Decimal Point Gate is high, the decimal point to the right of the third display digit will be lit; if the output is low, the decimal point to the right of the second digit will be lit. In addition, U18D inverts the LCF0 signal for use in the Readout Driver Assembly.

The decimal point drive current is controlled by the Drive Current Ramp Generator in the same way as the segment drive currents.

Scans by ARTEK MEDIA =>

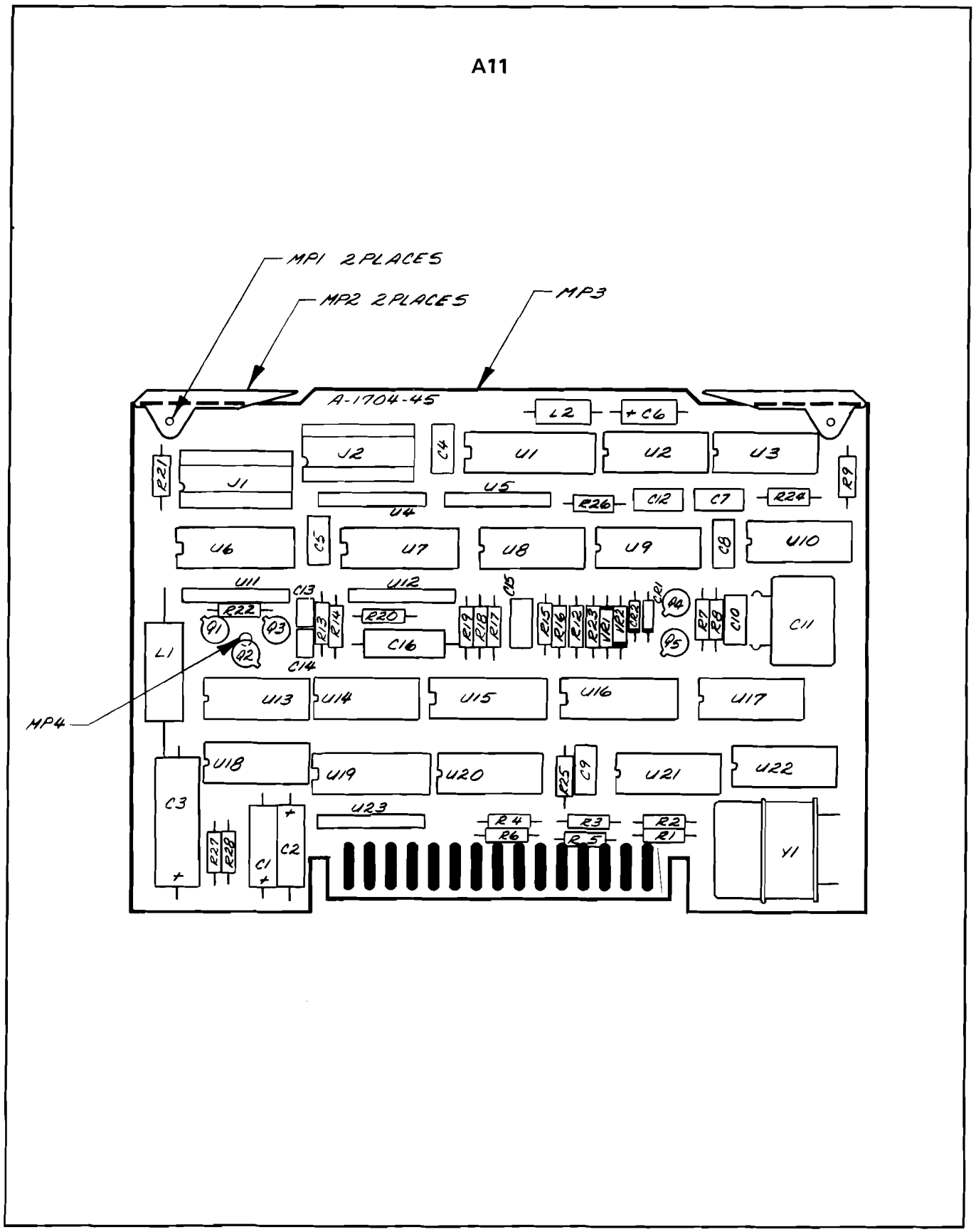

Figure 8-53. A11 DVM Digital Assembly, Component Locations

Scans by ARTEK MEDIA =>

Scans by => ARTEK MEDIA © 2003-2005

A11 DVM DIGITAL ASSEMBLY
08565-60015

P1

PIN	SIGNAL	TO/FROM	FUNCTION BLOCK
1 16	+5.2V +5.2V		R R
2 17	-15V -15V		R R
3 18	+15V +15V		R R
4 19	▽ ▽		R R
5 20	NC NC		
6 21	NC NC		
7 22	NC INPUT ENABLE	A12 P1-24	A B
8 23	NC NC		
9 24	FREQ DISPLAY HOLD ZERO DETECT HELD	A1A2 J1-6 A12 P1-9	H A
10 25	RUE +REF EN	A12 P1-28 A12 P1-10	P A
11 26	SCN/2 -REF EN	A12 P1-29 A12 P1-11	G A
12 27	A POL	A12 P1-27 A12 P1-27	F A B
13 28	SCN/4 ZERO DETECT	A12 P1-30 A12 P1-13	G B
14 29	B7 RESET	A21A1 J1-4 A12 P1-14	N F
15 30	B8 30Hz	A21A1 J1-6 A12 P1-15	N D

J1	SIGNAL	TO/FROM	FUNCTION BLOCK
1 16	CFD CF5	A39 J1-1 A39 J1-16	Q J
2 15	CF f CF 4	A39 J1-2 A39 J1-15	L J
3 14	CF g CK	A39 J1-3 A39 J1-14	L P
4 13	CF e CF 2	A39 J1-4 A39 J1-13	L J
5 12	CF d CF 1	A39 J1-5 A39 J1-12	L J
6 11	$\overline{CF3}$ dpc	A39 J1-6 A39 J1-11	J N
7 10	$\overline{CFD}$ CFa	A39 J1-7 A39 J1-10	J L
8 9	CFc CFb	A39 J1-8 A39 J1-9	L L

J2	SIGNAL	TO/FROM	FUNCTION BLOCK
1 16	NC CFD 5	A2A2 J1-16	J
2 15	CFD F CFD 4	A2A2 J1-2 A2A2 J1-15	O J
3 14	CFD g CFD 3	A2A2 J1-3 A2A2 J1-14	O J
4 13	CFD e CFD 2	A2A2 J1-4 A2A2 J1-13	O J
5 12	CFD d CFD 1	A2A2 J1-5 A2A2 J1-12	O J
6 11	NC NC		
7 10	CFD dp CFD a	A2A2 J1-7 A2A2 J1-10	O O
8 9	CFD c CFD b	A2A2 J1-8 A2A2 J1-9	O O

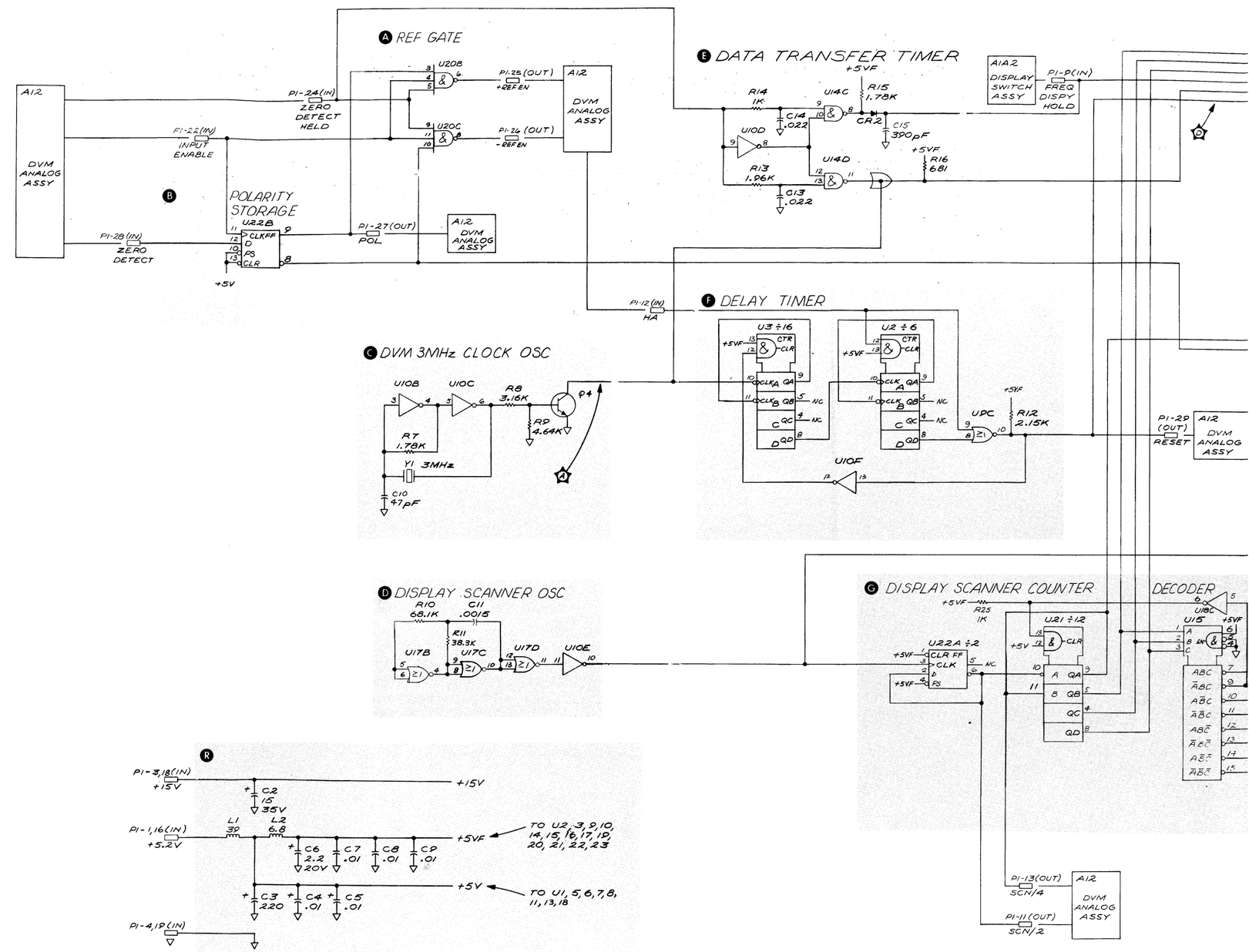

Scans by => ARTEK MEDIA © 2003-2005

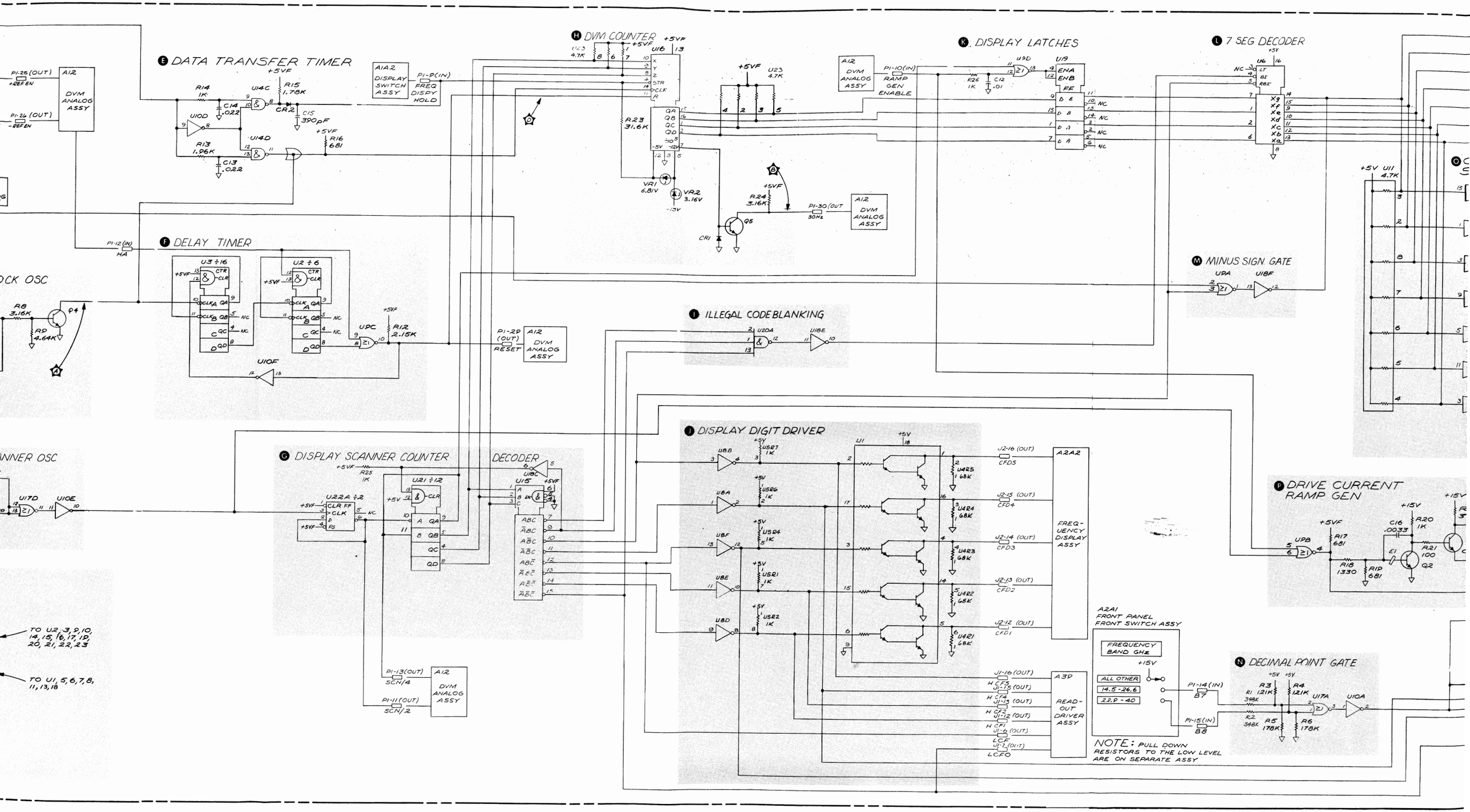

Scans by => ARTEK MEDIA © 2003-2005

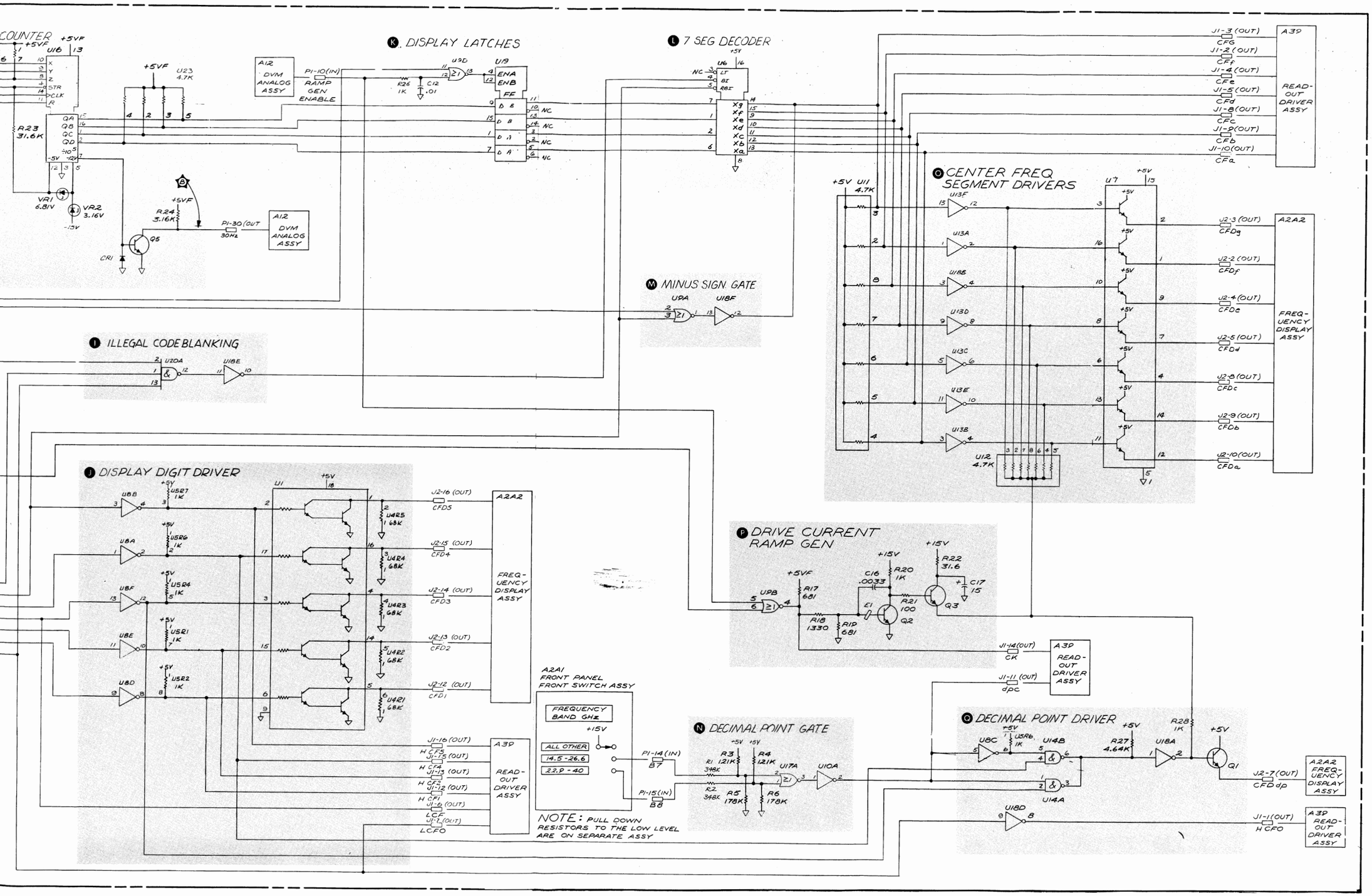

NOTES:

1. REFERENCE DESIGNATORS WITHIN THIS ASSEMBLY ARE ABBREVIATED. FOR COMPLETE DESIGNATOR, PREFIX WITH ASSEMBLY REFERENCE DESIGNATOR.
2. UNLESS OTHERWISE INDICATED: RESISTANCE IN OHMS (Ω) CAPACITANCE IN MICROFARADS (μF) INDUCTANCE IN MICROHENRIES (μH)
3. UNLESS OTHERWISE INDICATED DIGITAL IC'S WILL HAVE THE FOLLOWING +5V AND GND CONNECTIONS:

NO. OF PINS ON PKG	+5V	GND
14	14	7
16	16	8
18	18	9

4. MNEMONICS:

CFD 0 THRU 5	CENTER FREQUENCY DIGIT DRIVERS
CFD a THRU g	CENTER FREQUENCY SEGMENT DRIVERS
CFD dp	CENTER FREQUENCY DECIMAL POINT DRIVERS
CK	DIGIT STROBE CLOCK
dpc	DECIMAL POINT CONTROL
HA	STATE COUNT "A", ACTIVE HIGH
HCF 0 THRU 5	CENTER FREQUENCY DIGIT ENABLES
LCF 0, LCF 3	CENTER FREQUENCY DIGIT ENABLES
LCF a THRU g	CENTER FREQUENCY SEGMENT ENABLES
SCN/2	SCAN OSCILLATOR DIVIDED BY TWO
SCN/4	SCAN OSCILLATOR DIVIDED BY FOUR

5. REFERENCE DESIGNATORS:

A11	
LAST USED	NOT USED
C17	
CR2	
L2	
R28	
Q5	
U23	
VR2	
Y1	

18
A11

Figure 8-54. A11 DVM Digital Assembly, Schematic Diagram

SERVICE SHEET 19

A20 BIAS ASSEMBLY, CIRCUIT DESCRIPTION

The Bias Assembly has two functions. It biases the Schottky mixer diode in the First Mixer Assembly, and it controls the gain of the Variable Gain Assembly to compensate for variations in conversion efficiency as a function of frequency.

Mixer Diode Bias I

The mixer diode in the First Mixer Assembly is biased differently depending on the harmonic mixing number desired. For the even harmonics (B3 and B5), conventional resistive biasing is used. For example, in Band 5 (B5 line goes to +15 V) the output of U4A goes low. How low it goes is determined by V5 adjustment R2, and the output resistance is determined by adjustment R5 (labeled R5). Optimum flatness is realized by using both potentiometers.

For the odd harmonics (B1, B2, B4, and B6), the mixer diode is driven by a virtual negative resistance. This helps to keep the conduction angle constant as a function of LO power into the mixer diode. For example, in Band 4 (B4 line goes to +15V), Q1 is turned on and the output voltage is partially determined by V4 adjustment R3. The current through R29 (which is also the current through the mixing diode) is sensed by U6B, and the output changes to maintain the same conduction angle for the diode. If the output of U6B (or TP4) is monitored with an oscilloscope during full band operation, the waveform should be irregular with at least a 0.5V peak-to-peak ripple, indicating that U8 is correcting for fluctuations in LO output power as a function of frequency.

Sweep + Tune Inverter A

The Sweep + Tune Inverter circuit takes the frequency analog voltage, which goes from −10V to −23V, and develops a voltage that goes from 0V to +13V. This voltage is then processed by the compensation amplifiers and controls the Non-Linear Current Source.

Non-Linear Current Source H

The Non-Linear Current Source sinks varying amounts of current from the PIN attenuator diodes in the Variable Gain Assembly. The higher the base voltage of Q9, the more current is sunk through the attenuating diodes, causing the gain of the Variable Gain Assembly to decrease.

Band 1 Compensation B

When Band 1 is selected, the B1 line goes to +15V, turning on FET Q3. This enables U1B to set the base voltage (and hence the attenuating current) of Q9 in the Non-Linear Current Source.

A11 DVM Digital Assembly
◀ SERVICE SHEET 18

Scans by ARTEK MEDIA =>

At the lowest frequency end of the band, the output of the Sweep + Tune Inverter is 0V. The voltage input to the Non-Linear Current Source is the weighted average of (1) the output voltage of U1B, (2) the voltage set by R7 (labeled B1A) and (3) the voltage at the input side of R45. Voltages (1) and (3) are zero, so the output is affected by (2) only. This means that the gain at the low end of the band is set by B1A. As frequency increases, (1) and (3) come into play pulling in opposite directions. If the gain of the inverting op amp is set to zero by R8 (labeled B1B), R45 will pull the output high, thereby increasing the attenuation as a function of frequency. If R8 is adjusted full CW, the attenuation will decrease as a function of frequency.

Band 3 compensation is identical in operation to Band 1 compensation.

Band 4 Compensation E

Bands 4, 5, and 6 compensation is similar to that of Band 1 except that more stages are added, allowing more compensation to be added at different frequencies in the band. The zener diodes VR1, VR7, VR8, VR9, and VR10 determine at what frequency the added gain is available. The feedback adjustments on the op amps determine how much gain is added.

Since Bands 4, 5, and 6 Compensation circuits are almost identical, only Band 4 Compensation is described in detail. The voltage at the cathode of VR11 (0V to 13V ramp) increases as the instrument sweeps through the band, and the diodes VR11 and VR1 are turned on in sequence. For the first 25 percent of the band neither VR11 nor VR1 conducts, and the voltage at the output (hence, the gain) is determined only by R14 (labeled B4A). Between the 25-percent and 60-percent points of the band, VR11 conducts, allowing U3A to affect the output voltage. The amount of its effect is determined by R15 (labeled B4B). Beyond the 60-percent point, VR1 also conducts, allowing U8B to affect the output voltage. The amount of its effect is determined by R100 (labeled B4C).

Band 2 Compensation C

Band 2 compensation is different from compensation for the other bands because it must be able to compensate for additional loss in the YTF at the lower end of the YTF range. U1A is connected as a non-inverting op amp to accomplish this. As the input voltage increases, the output voltage increases by an amount set by R10 (labeled B2B), thereby increasing the attenuation as a function of frequency. In the case of an exceptional YTF, R57 causes the attenuation to decrease as a function of frequency if R10 is set full CW. About a third of the way through the band, inverting amplifier U2B overcomes the increase in attenuation and controls the gain for the last two-thirds of the band.

Scans by ARTEK MEDIA =>

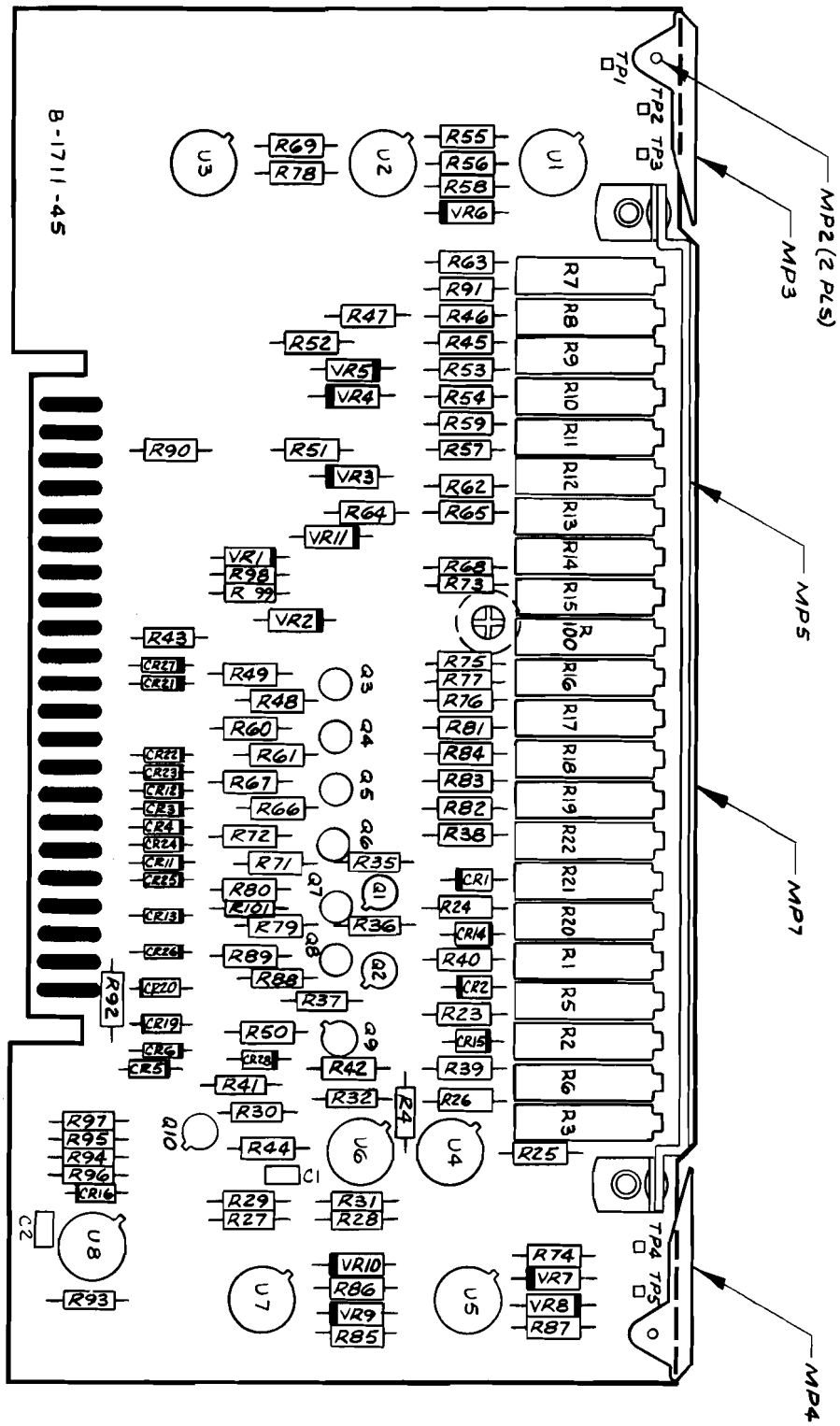

Figure 8-55. A20 Bias Assembly, Component Locations

Scans by ARTEK MEDIA =>

Scans by => ARTEK MEDIA © 2003-2005

A20 BIAS ASSEMBLY 08565-60023

P1

PIN	SIGNAL	TO/FROM	FUNCTION BLOCK
1	-40V		NOT USED
23	-90V		NOT USED
2	-15V		J
24	-15V		J
3	+15V		J
25	+15V		J
4	+30V		J
26	+30V		I
5	▽		J
27	▽		I
6	NC		
28	NC		
7	NC		
29	NC		
8	YTO FREQ ANALOG	A17P1-30	A
30			
9	NC		
31	NC		
10	NC		
32	NC		
11	NC		
33	NC		
12	NC		
34	NC		
13	NC		
35	NC		
14	NC		
36	NC		
15	B1	A2A1J1-17	I
37	NC		
16	B2	A2A1J1-15	I
38	NC		
17	B3	A2A1J1-11	I
39	NC		
18	B4	A2A1J1-7	I
40	NC		
19	B5	A2A1J1-3	I
41	B6D	A2BP1-41	I
20	B6	A2A1J1-6	I
42	FLATNESS	A2BP1-42	H
21	B7	A2A1J1-4	H
43	NC		
22	B8	A2A1J1-6	H
44	DIODE BIAS	A30	I

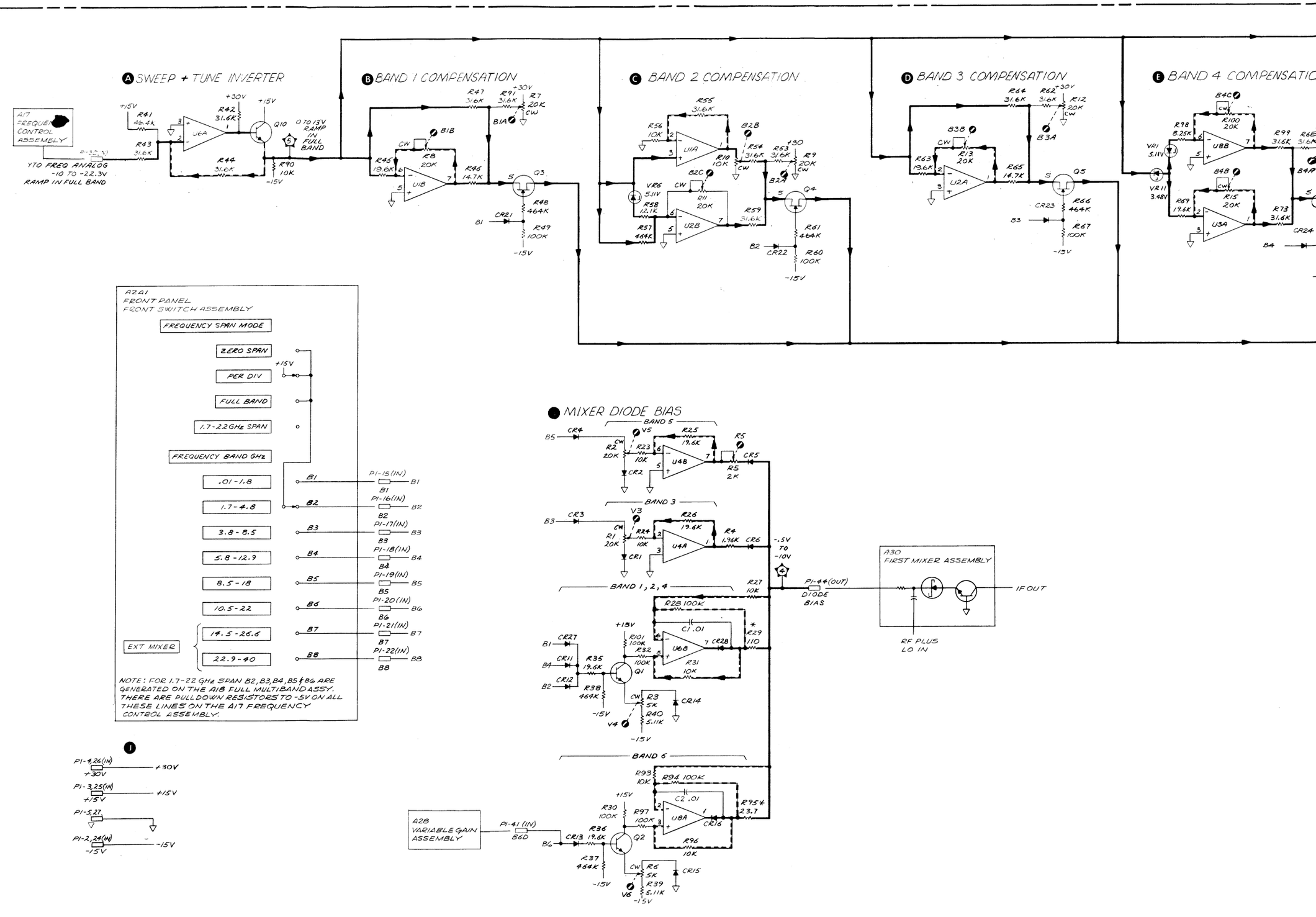

SERIAL PREFIX: 1712A APRIL 15, 1977

Scans by => ARTEK MEDIA © 2003-2005

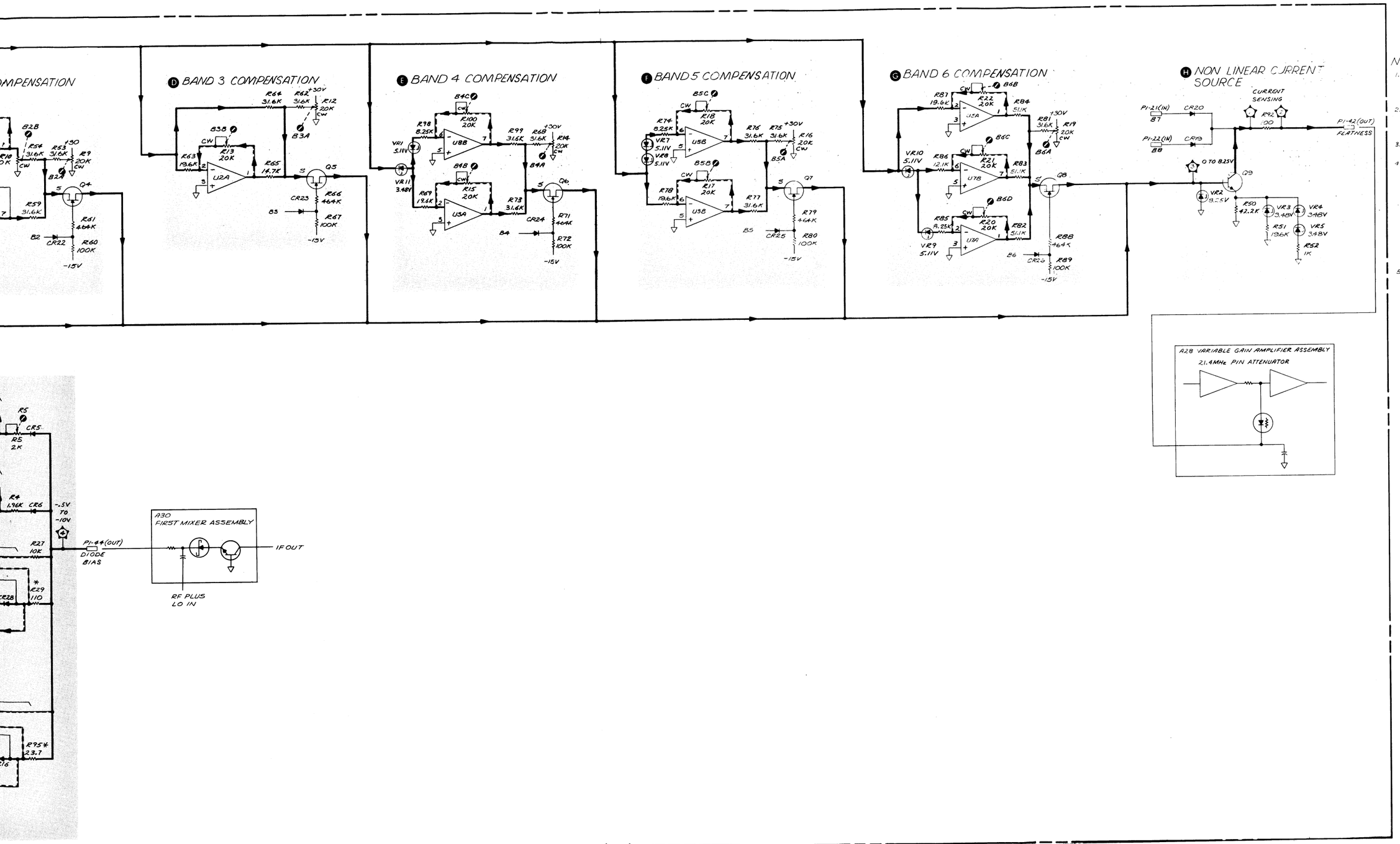

NOTES:

1. REFERENCE DESIGNATORS WITHIN THIS ASSEMBLY ARE ABBREVIATED. PREFIX ABBREVIATION WITH ASSEMBLY NUMBER FOR COMPLETE REFERENCE DESIGNATOR.
2. UNLESS OTHERWISE INDICATED: RESISTANCE IN OHMS (Ω) CAPACITANCE IN MICROFARADS (μF) INDUCTANCE IN MICROHENRIES (μH)
3. * ASTERISK DENOTES FACTORY SELECTED COMPONENT. NOMINAL VALUE SHOWN.
4. REFERENCE DESIGNATORS

A20	
LAST USED	NOT USED
CR28	CR7-10,17,18
VR11	
U8	
R101	R33,34,70
Q10	
C2	

5. U1 THRU U8 PIN 8 IS CONNECTED TO +15V, PIN 4 TO -15V.

19
A20

Figure 8-56. A20 Bias Assembly, Schematic Diagram

SERVICE SHEET 20

A28 VARIABLE GAIN ASSEMBLY, CIRCUIT DESCRIPTION

The Variable Gain Assembly has four functions: It amplifies the 21.4 MHz signal from the Third Converter Assembly, it varies gain (or attenuation) to compensate for changes in conversion efficiency of the RF section, it provides variable gain for reference level calibration, and it provides attenuation for the signal identification function.

Z Matching Filter (A) and IF Preamplifier (B)

Transistor Q7 provides voltage gain while transistor Q6 serves as an emitter follower output buffer. Because of collector-to-base feedback (R2), the IF Preamplifier has low (~5Ω) input impedance. The Z Matching Filter matches the 50-ohm input from the Third Converter Assembly to the IF Preamplifier.

Calibrated Flatness Compensating Attenuator (C)

The Calibrated Flatness Compensating Attenuator has about 20 dB of range to compensate for the change in conversion efficiency of the RF section through each band. The large changes in conversion efficiency which occur when switching bands is compensated for in the Band Conversion Loss Compensating Amplifier, which is discussed later. The variable attenuator is controlled from the Bias Assembly, which sinks current through PIN diodes CR1 and CR2. The more current it sinks, the greater the attenuation.

PIN RES pot R7 is used to calibrate the attenuator so that RF components, the Bias Assembly, or the Variable Gain Assembly can be changed without seriously affecting the flatness of the instrument. Q5 is the constant current source which can be manually switched in to accomplish this calibration.

Band Conversion Loss Compensating Amplifier (D)

The Band Conversion Loss Compensating Amplifier changes gain in discrete steps that are roughly equal to the changes in conversiassociated with band switching in the RF section. In bands B1 and B2, the circuit has unity gain. For bands B3 through B6, more gain is switched in by diodes CR3 through CR7 (see Figure 8-57).

The values of R19, R21, and R23 are different for different First Mixer Assemblies. If a new Variable Gain Assembly or First Mixer Assembly is fitted, these resistor values must be changed. (See Section V, Adjustments.)

Reference Level Calibration Attenuator (E)

The Reference Level Calibration Attenuator functions as a common emitter amplifier with gain ranging from about +5 dB to −5 dB. The current through the PIN diodes CR8 and CR9 modulates their resistance and the gain of the amplifier. The REF LEVEL control on the front panel diverts away from the PIN diodes varying amounts of current from the +10V supply. If the control is

A20 Bias Assembly
SERVICE SHEET 19

Scans by ARTEK MEDIA =>

open or the line broken, the amplifier will stay in the minimum gain condition.

Signal Identifier Attenuator F

The Signal Identifier Attenuator functions as a common emitter amplifier with gain of about 2 dB, except when the SIG IDENT line goes to +15V. This switches in an additional resistor R33 and lowers the gain to about −2 dB.

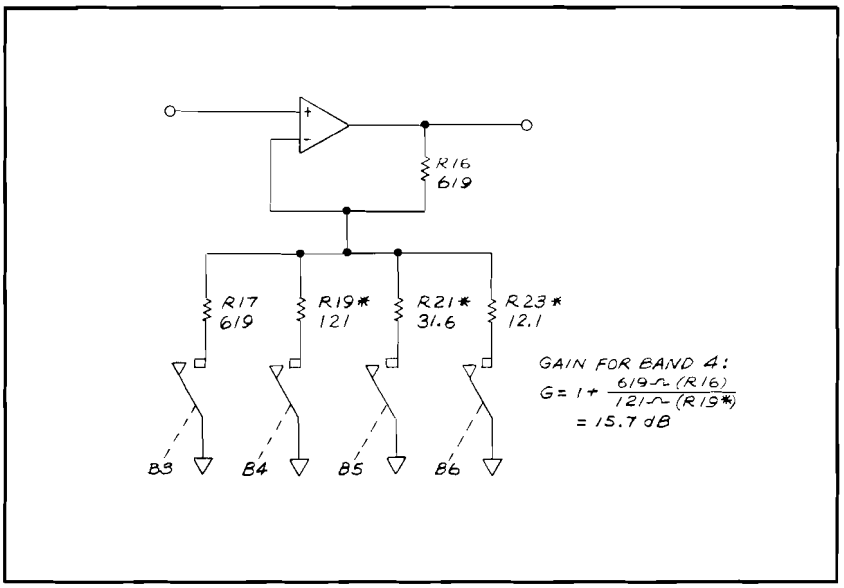

Figure 8-57. A28 Switching in Gain

Scans by ARTEK MEDIA =>

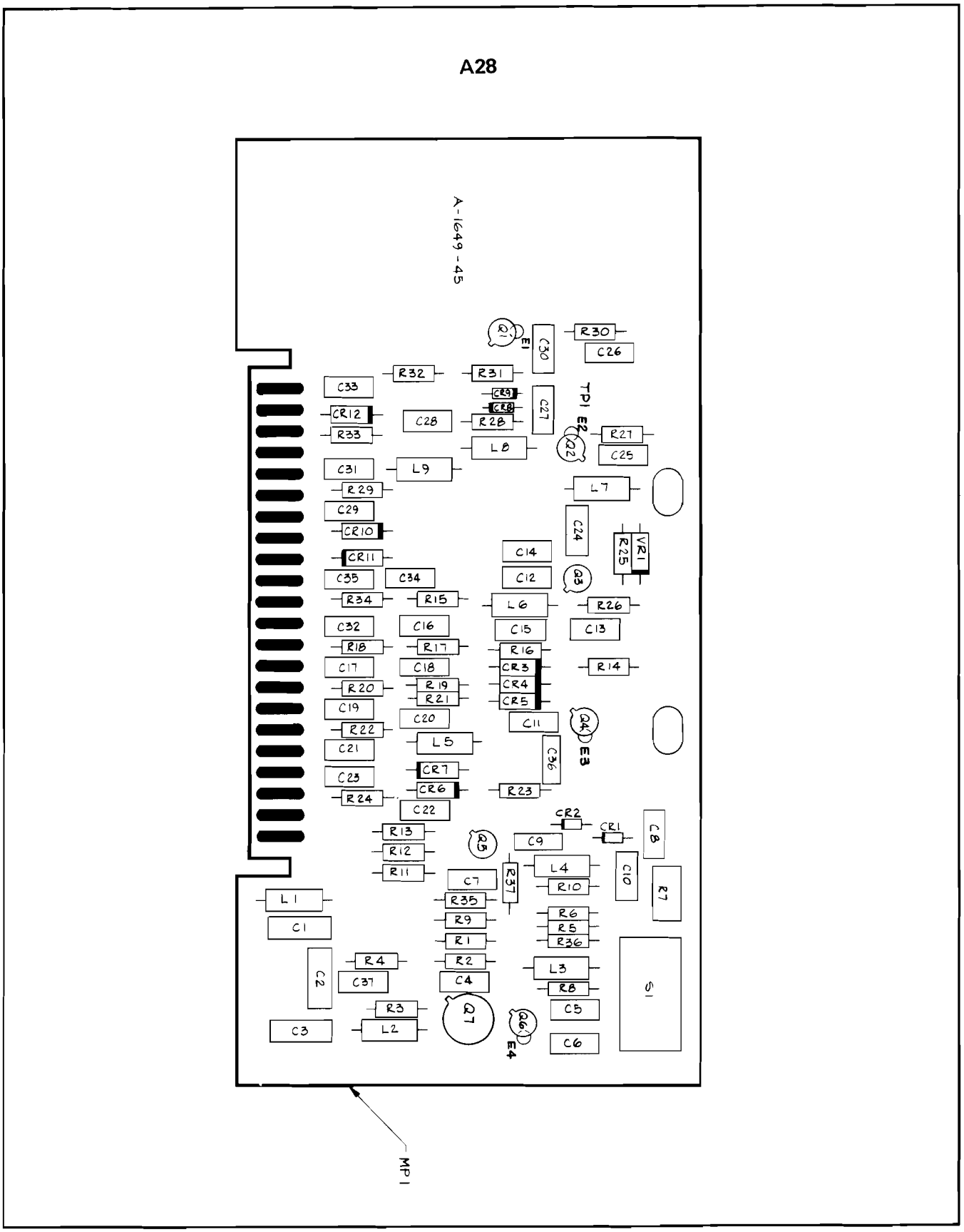

Figure 8-58. A28 Variable Gain Assembly, Component Locations

Scans by ARTEK MEDIA =>

Scans by => ARTEK MEDIA © 2003-2005

A28 VARIABLE GAIN ASSEMBLY
08565-60027

P1

PIN	SIGNAL	TO/FROM	FUNCTION BLOCK
1 / 23	▽ 21.4MHz IF	A27P1-23	F
2 / 24	▽ NC		
3 / 25	▽ NC		
4 / 26	▽ NC		
5 / 27	▽ +15V		G
6 / 28	▽ NC		
7 / 29	▽ +10VTV	A16P2-12	G
8 / 30	▽ NC		
9 / 31	▽ NC		
10 / 32	▽ SIG IDENT	A13P1-25	F
11 / 33	▽ NC		
12 / 34	▽ NC		
13 / 35	▽ NC		
14 / 36	▽ REF LEVEL CAL	A2A1J2-10	E
15 / 37	▽ NC		
16 / 38	▽ B3	A2A1J1-11	D
17 / 39	▽ B4	A2A1J1-7	D
18 / 40	▽ B5	A2A1J1-3	D
19 / 41	▽ B6D	A20P1-41	D
20 / 42	▽ FLATNESS	A20P1-42	C
21 / 43	▽ NC		
22 / 44	▽ 21.4MHz IF	A37J2	A

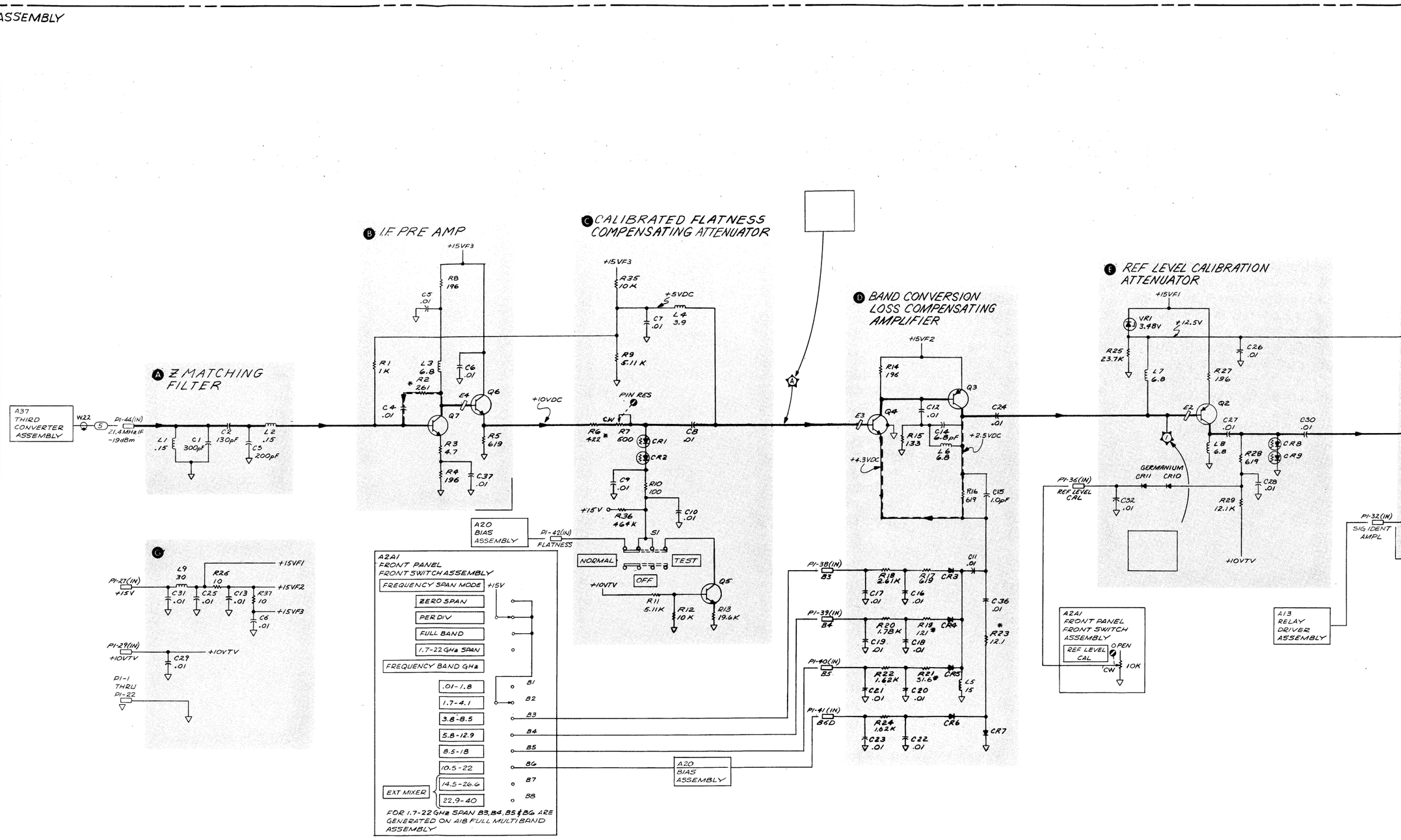

SERIAL PREFIX: 1712A APRIL 15, 1977

Scans by => ARTEK MEDIA © 2003-2005

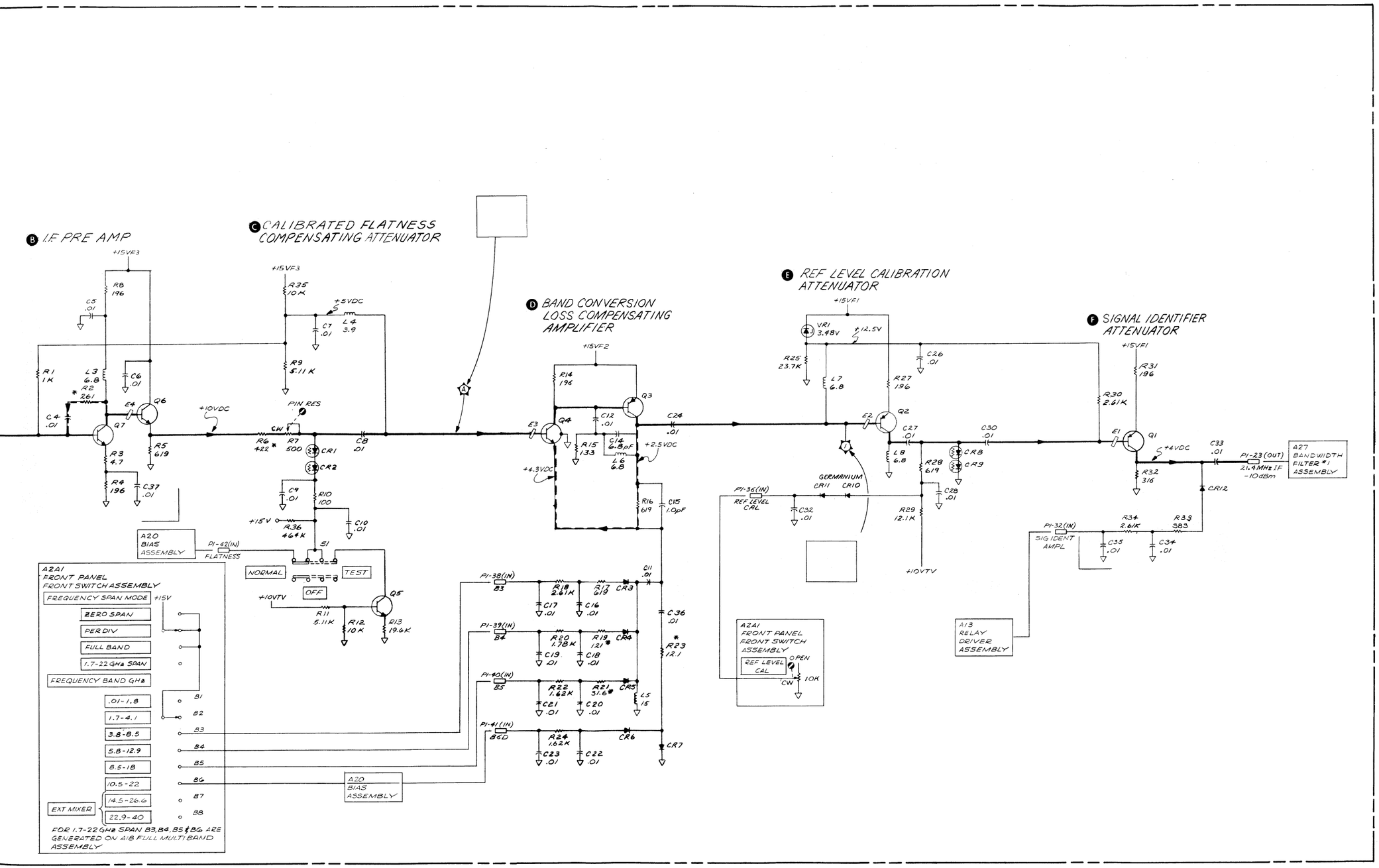

NOTES

1. REFERENCE DESIGNATORS WITHIN THIS ASSEMBLY ARE ABBREVIATED. FOR COMPLETE DESIGNATOR PREFIX WITH ASSEMBLY REFERENCE DESIGNATOR.
2. UNLESS OTHERWISE INDICATED: RESISTANCE IN OHMS (Ω), CAPACITANCE IN MICROFARADS (μF).
3. * ASTERISK INDICATES FACTORY SELECTED COMPONENT. NOMINAL VALUE IS SHOWN.
4. — INDICATES SHIELDING BEAD.
5. SIGNAL LEVELS & TEST POINT WAVEFORMS ASSUME THE FOLLOWING SETTINGS: GREEN (NORMAL) SETTINGS FREQUENCY SPAN/DIV: 1 MHz FREQUENCY BAND: 0.1-1.8 GHz INPUT ATTEN: 0dB REFERENCE LEVEL: -10dBm 100 MHz -10dBm (CAL OUTPUT) TO INPUT. ANALYZER TUNED TO SIGNAL.
6. REFERENCE DESIGNATORS

A28	
LIST USED	NOT USED
C37	
C612	
L9	
R37	
S1	
VR1	

20
A28

Figure 8-59. A28 Variable Gain Assembly, Schematic Diagram

ans by => ARTEK MEDIA © 2003-2005

SERVICE SHEET 21
A27 BANDWIDTH FILTER NO. 1 ASSEMBLY, CIRCUIT DESCRIPTION

The Bandwidth Filter No. 1 Assembly operates at 21.4 MHz and is variable in bandwidth from 3 MHz to 1 kHz. The front-panel RESOLUTION BW switch is used to select one of eight available bandwidth settings (3 MHz, 1 MHz, 300 kHz, 100 kHz, 30 kHz, 10 kHz, 3 kHz, and 1 kHz). The narrower bandwidths (1 kHz through 30 kHz) are obtained from four synchronously tuned crystal filters; the four wider bandwidths (100 kHz through 3 MHz), from four synchronously tuned LC tank circuits. The four stages of bandwidth filters are on two similar printed-circuit boards, Bandwidth Filter No. 1 Assembly (A27) and Bandwidth Filter No. 2 Assembly (A23). (Two LC tank circuits and two crystal filters are on each board.) The four crystals in the two bandwidth assemblies (A23Y1, A23Y2, A27Y1, and A27Y2) are a factory-selected matched set. If replacement of a bandwidth filter assembly is necessary, the new board is shipped with two crystals installed and the other two crystals (which must be used to replace the existing two crystals in the good bandwidth filter assembly) are packaged separately. The separate package of crystals is included with the new bandwidth filter board. In addition to the filter stages, each Bandwidth Filter Assembly provides 10 dB of gain in both LC and crystal filter operation. (There is some gain in the "unity" gain buffer amplifiers.)

10 dB Input Buffer Amplifier

The 10 dB Input Buffer Amplifier functions as a non-inverting op amp.

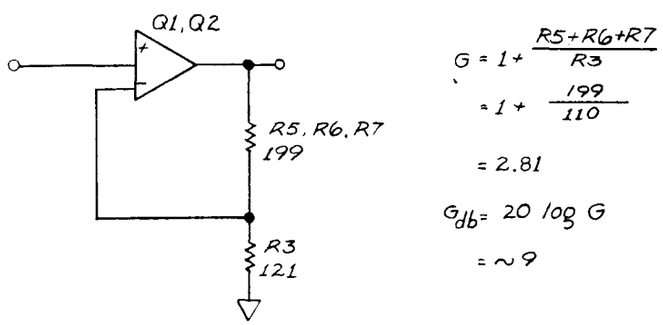

In the crystal mode (the four narrower bandwidths), the amplifier includes Q3. The biasing of the amplifier is independent of its ac (21.4 MHz) operation but is very critical for its proper functioning. If a malfunction occurs, the dc bias should be checked first.

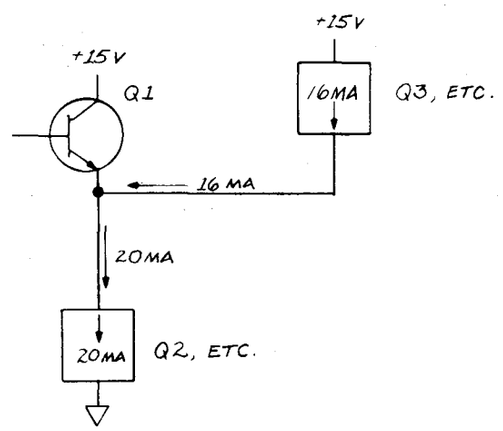

The current through Q1 is determined by the difference between two current sources, one involving Q3 and the other involving Q2. The most convenient way to find the current from each source is to measure the voltage across each emitter resistor. (A 1 kΩ resistor should be used in series with the voltmeter probe tip to prevent the circuit from oscillating and giving an erroneous reading.) For Q3 and Q6, the current through R58 and R60 must be included. If results are inconsistent, the emitter resistor should be checked also. Check to see that the BW5 line is at the voltage specified (~±0.3V) in the table on the schematic.

In the LC mode (the four wider bandwidths), the BW5 line goes to 14.8V and turns off the current source Q3. The current supplied by Q3 in the crystal mode is now supplied through CR1 and R13 from the BW5 line. In the LC mode, the current through Q1 can be found by subtracting the current through R13 from the current through R8.

Unity Gain Buffer Amplifier F

The Unity Gain Buffer Amplifier is the same as the 10 dB Input Buffer Amplifier except that it has a FET input (Q5) and is connected for unity gain. The input is selected by the BW5 line from CR9 in the LC mode or from CR8 in the crystal mode.

In the crystal mode, the current through Q5 is determined by the difference between the current sourced by Q6 and that sunk by Q7: about 4 mA. A significant deviation from this current should be reflected by the gate-to-gate source voltage of Q5. The source should be at least 0.2V more positive than the gate, but not more than 1.5V more positive. If the difference is less than 0.2V, the FET current is too high; if the difference is greater than 1.5V, the FET current is too low. In either case the FET could also be defective. To determine precisely the current through Q5, the difference between the current through R38 and that through R60 should be subtracted from the current through R30. If the results are inconsistent, check the above-mentioned resistors.

In LC mode of operation, current is supplied through R37 and CR19 from the BW5 line instead of through Q6. The difference between the current through R37 and that through R30 yields the FET current.

Output Buffer Amplifier I

The output Buffer Amplifier is a complementary pair of transistors in which Q9 acts as a source follower boosted by Q10. The current through FET Q9 is set by R53:

$$I_{FET} = \frac{V_{be\ (Q10)}}{196\Omega} \simeq \frac{.7}{196\Omega} \simeq 3\ \text{mA}$$

The total current through Q9 and Q10 is set by R54. The input is selected by the BW5 line from either CR16 in the LC mode or CR15 in the crystal mode.

Crystal Filtering Circuits E H

The bandwidths 1 kHz, 3 kHz, 10 kHz, and 30 kHz are obtained by crystal filtering. The crystals are used in series resonant mode and can be modeled as a series resonant circuit with a parallel capacitance:

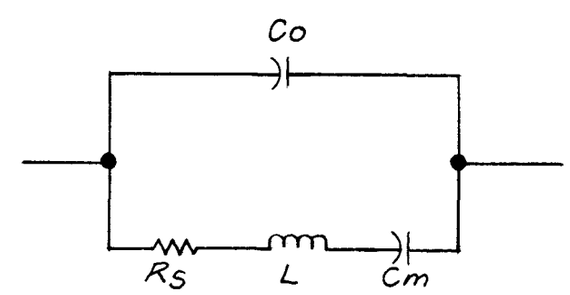

The parallel capacitance (C_0) and series resistance (R_S) are not desired and are compensated for in the circuit, resulting in this simplified schematic of a single pole of crystal filtering:

Scans by => ARTEK MEDIA © 2003-2005

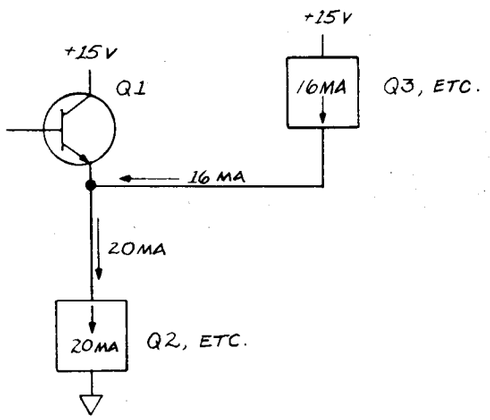

The current through Q1 is determined by the difference between two current sources, one involving Q3 and the other involving Q2. The most convenient way to find the current from each source is to measure the voltage across each emitter resistor. (A 1 kΩ resistor should be used in series with the voltmeter probe tip to prevent the circuit from oscillating and giving an erroneous reading.) For Q3 and Q6, the current through R58 and R60 must be included. If results are inconsistent, the emitter resistor should be checked also. Check to see that the BW5 line is at the voltage specified (~±0.3V) in the table on the schematic.

In the LC mode (the four wider bandwidths), the BW5 line goes to 14.8V and turns off the current source Q3. The current supplied by Q3 in the crystal mode is now supplied through CR1 and R13 from the BW5 line. In the LC mode, the current through Q1 can be found by subtracting the current through R13 from the current through R8.

Unity Gain Buffer Amplifier F

The Unity Gain Buffer Amplifier is the same as the 10 dB Input Buffer Amplifier except that it has a FET input (Q5) and is connected for unity gain. The input is selected by the BW5 line from CR9 in the LC mode or from CR8 in the crystal mode.

In the crystal mode, the current through Q5 is determined by the difference between the current sourced by Q6 and that sunk by Q7: about 4 mA. A significant deviation from this current should be reflected by the gate-to-gate source voltage of Q5. The source should be at least 0.2V more positive than the gate, but not more than 1.5V more positive. If the difference is less than 0.2V, the FET current is too high; if the difference is greater than 1.5V, the FET current is too low. In either case the FET could also be defective. To determine precisely the current through Q5, the difference between the current through R38 and that through R60 should be subtracted from the current through R30. If the results are inconsistent, check the above-mentioned resistors.

In LC mode of operation, current is supplied through R37 and CR19 from the BW5 line instead of through Q6. The difference between the current through R37 and that through R30 yields the FET current.

Output Buffer Amplifier I

The output Buffer Amplifier is a complementary pair of transistors in which Q9 acts as a source follower boosted by Q10. The current through FET Q9 is set by R53:

$$I_{FET} = \frac{V_{be}\ (Q10)}{196\Omega} \simeq \frac{.7}{196\Omega} \simeq 3\ \text{mA}$$

The total current through Q9 and Q10 is set by R54. The input is selected by the BW5 line from either CR16 in the LC mode or CR15 in the crystal mode.

Crystal Filtering Circuits E H

The bandwidths 1 kHz, 3 kHz, 10 kHz, and 30 kHz are obtained by crystal filtering. The crystals are used in series resonant mode and can be modeled as a series resonant circuit with a parallel capacitance:

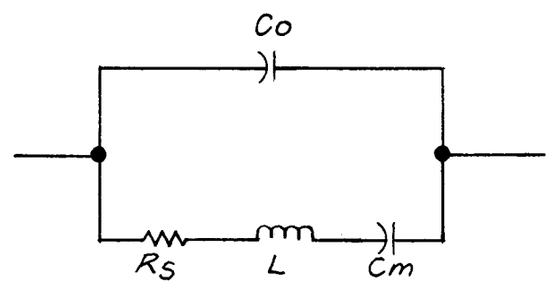

The parallel capacitance (C_O) and series resistance (R_S) are not desired and are compensated for in the circuit, resulting in this simplified schematic of a single pole of crystal filtering:

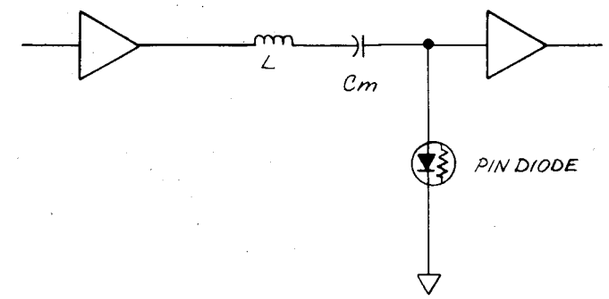

The PIN diode CR4 functions as a variable resistor at 21.4 MHz. As the resistance is lowered by increasing the current in the BW6 line, the bandshape becomes narrower. The bandwidth of one pole widens to approximately 70 kHz when the PIN is turned off completely at the 30 kHz BW setting. (For a four-pole filter, the bandwidth of each pole is about 2.3 times the bandwidth of all four poles taken together. The bandwidth of two poles is about 1.5 times the bandwidth of all four poles taken together).

A simplified schematic of a crystal pole, including compensation for R_S and C_O in the crystal and input capacitance of the buffer amplifier, is shown in Figure 8-60.

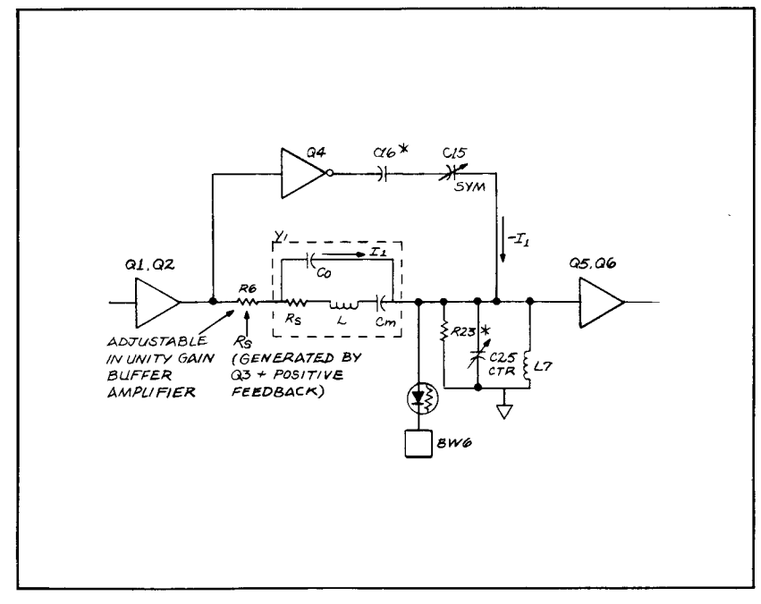

Figure 8-60. Crystal Pole, Simplified Schematic

The SYM adjustment C15 compensates for C_O by producing a current ($-I_1$) that is equal to the current (I_1) through C_O of the crystal but opposite phase. These currents cancel and nullify the effect of C_O. The positive feedback from the collector of Q3 generates a negative output resistance that cancels R_S of the crystal. This is approximated by resistor R6 in the 10 dB Input Buffer Amplifier and potentiometer R31 in the Unity Gain Buffer Amplifier.

The input capacitance of the buffer amplifier, printed circuit board capacitance, PIN capacitance, and the centering (CTR) capacitor C25 are in parallel resonance with L7. These components have negligible effect on the band shape and as long as C25 has sufficient range to "dip" the bandshape, they can be ignored in analyzing the remainder of the circuit.

The PIN diode CR4 controls bandwidths from 1 kHz to 10 kHz. For the 30 kHz bandwidth, CR4 is back biased, and R23 sets that bandwidth. If the 30 kHz bandwidth is much too narrow, even with CR4 back biased, the circuit may be loaded by a bad buffer amplifier (Q5, Q7) or inverting amplifier (Q4). If the bandwidth is only slightly narrow, it may be widened by padding R23. If the narrowest bandwidths (1 kHz or 3 kHz) have too little gain, and it cannot be increased enough by R31, either the crystals have too high a series resistance (defective crystal); or the output resistance is not negative enough (defective buffer amplifier or Q3).

Almost any defect in the filter boards (A23 and A27) will result in a faulty dc bias condition in one of the three buffer amplifiers on each board. The dc bias of each stage is less straightforward than ac (21.4 MHz) operation and should be checked carefully.

LC Filtering Circuits D G

The two LC filtering circuits are used for the wider bandwidths (100 kHz through 3 MHz). They are similar in function; the First LC Pole circuit is described. A schematic of the simplified equivalent circuit is shown below:

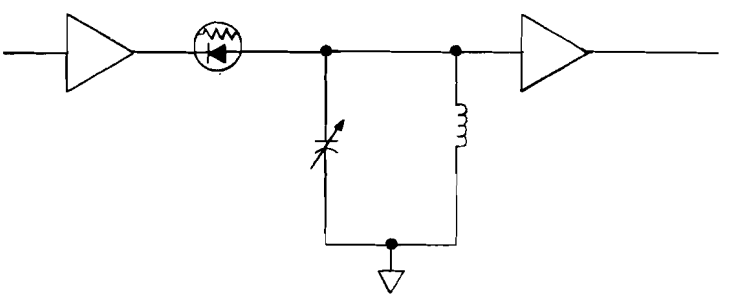

Scans by ARTEK MEDIA =>

The LC filter utilizes a metallized inductor L6 in parallel with three capacitors: C23 (LC CTR) for centering, C21 for temperature compensation, and C20*. The parallel circuit is driven through PIN diode CR3, which functions as a variable resistor. The BW7 line sets the current through CR3. Higher resistance results in narrower bandwidth. A simplified schematic of the First LC Pole circuit is shown in Figure 8-61.

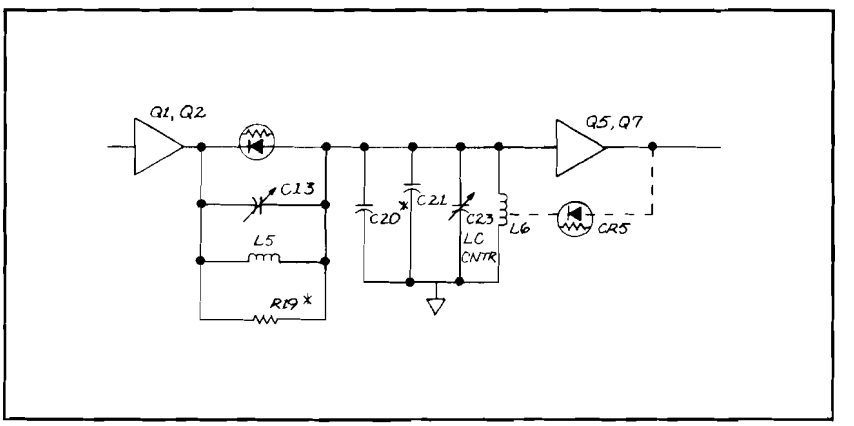

Figure 8-61. First LC Pole Circuit, Simplified Schematic

C73 and L5 tune out the capacitance of CR3. R19* sets the 100 kHz bandwidth when CR3 is back biased (i.e., highest resistance). CR5 is controlled by the LC FEEDBACK pot R26 and compensates for losses in the parallel resonant circuit. (In the Second LC Pole circuit, fixed resistor R56* replaces CR5.

Low gain in one of the poles in the 100 kHz bandwidth is caused by:

1. The pole being centered at some frequency other than 21.4 MHz (a defective metallized inductor is most common)

2. The Q of the pole being too low (not a common failure)

3. Insufficient feedback from the buffer amplifier

4. Defective buffer amplifier that is loading the circuit

If the 100 kHz bandwidth amplitude is all right, but that of the 300 kHz bandwidth is too low, either C73 or C74 might not be properly adjusted. If the 300 kHz amplitude is too high, the four LC poles are not tuned close enough to the same frequency. In eithe case, refer to Section V, Adjustments.

Scans by ARTEK MEDIA =>

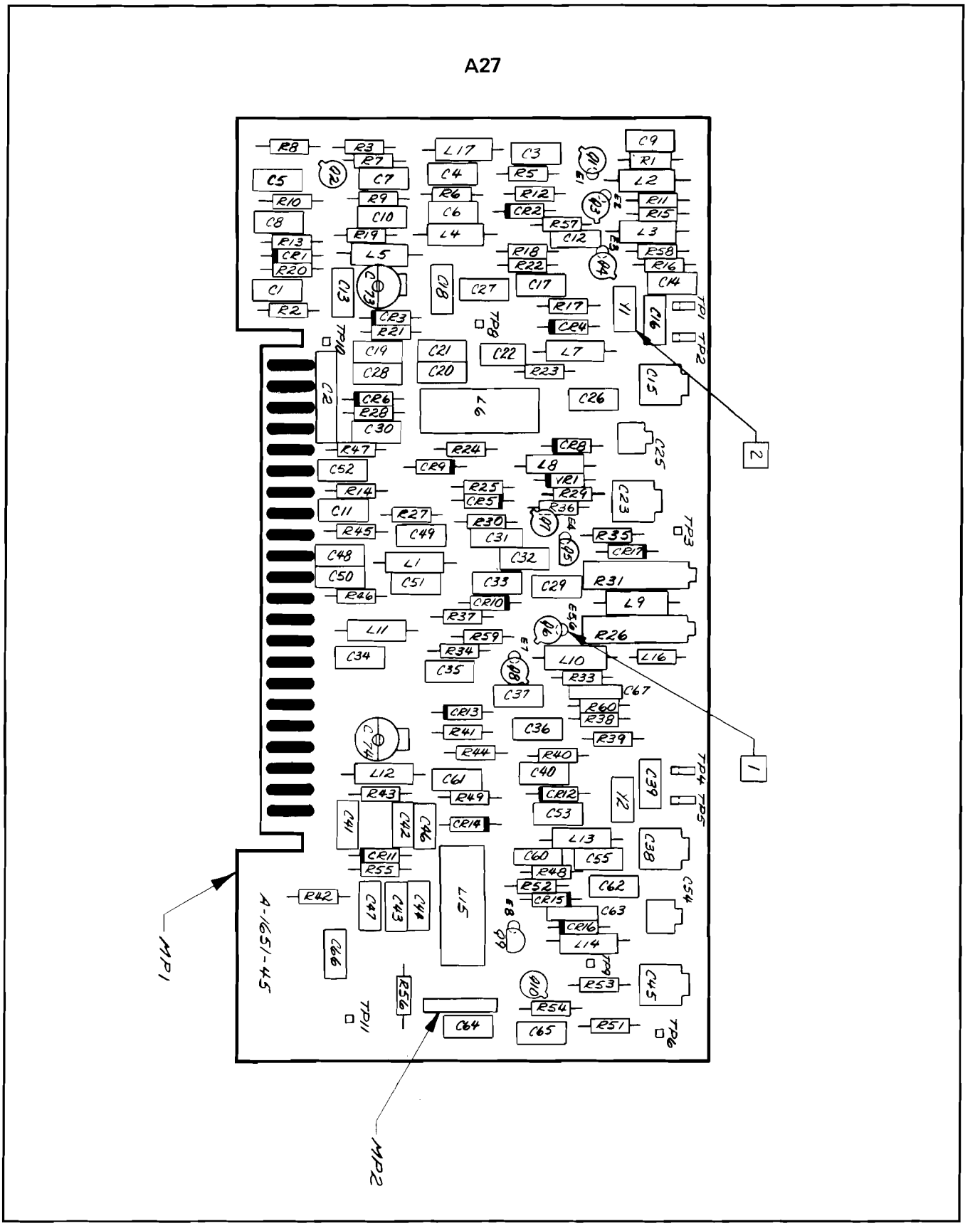

Figure 8-62. A27 Bandwidth Filter No. 1 Assembly, Component Locations

Scans by ARTEK MEDIA =>

Scans by => ARTEK MEDIA © 2003-2005

A27 BANDWIDTH FILTER NO. 1 ASSEMBLY
08565-60033

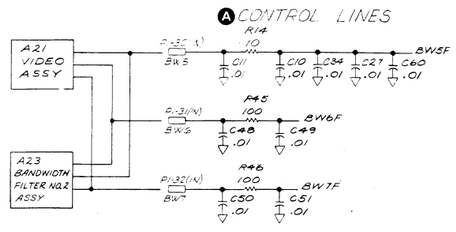

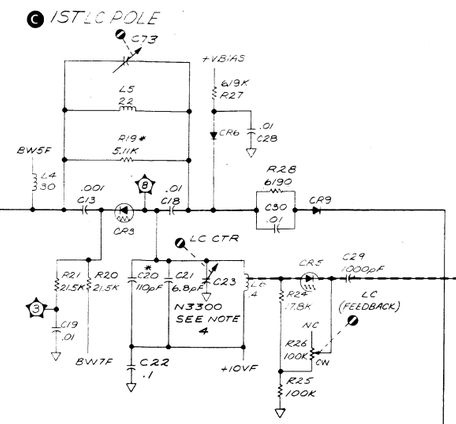

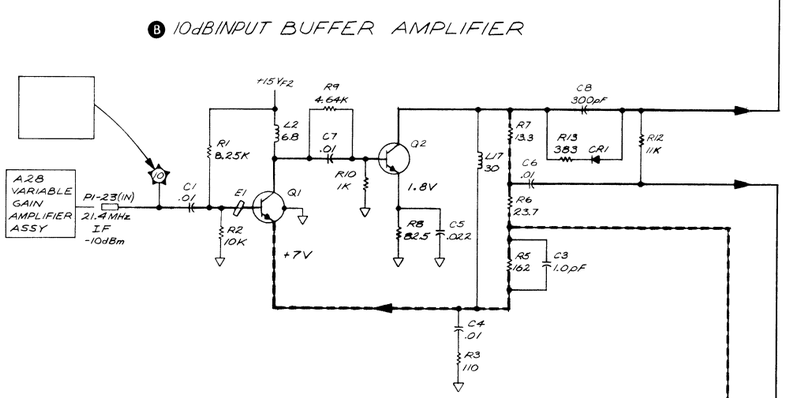

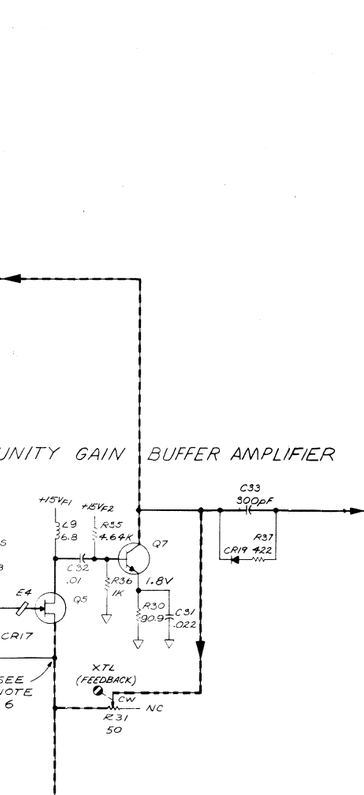

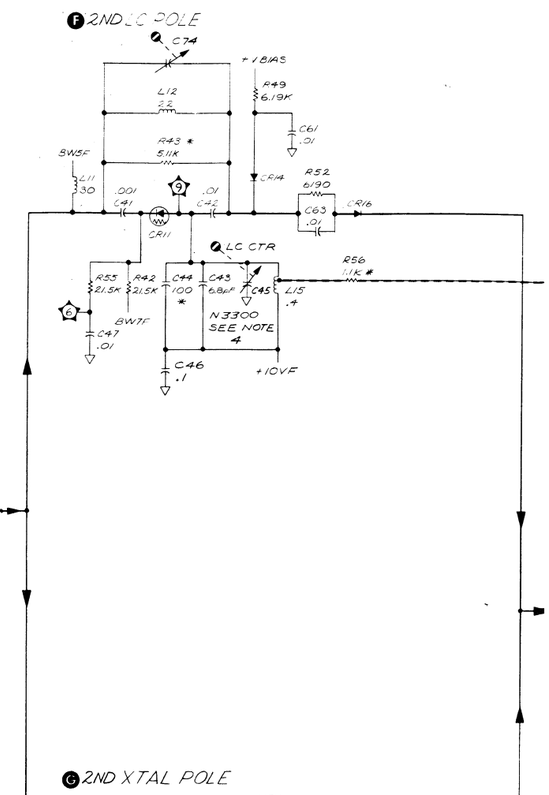

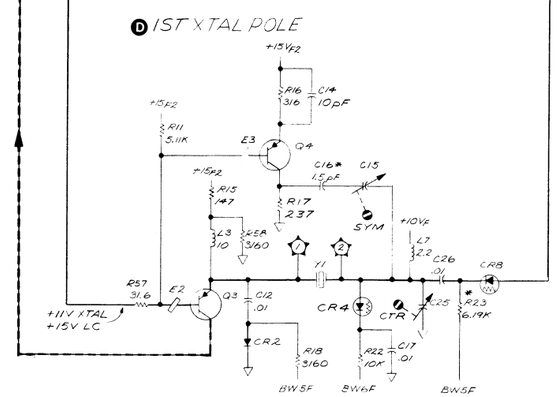

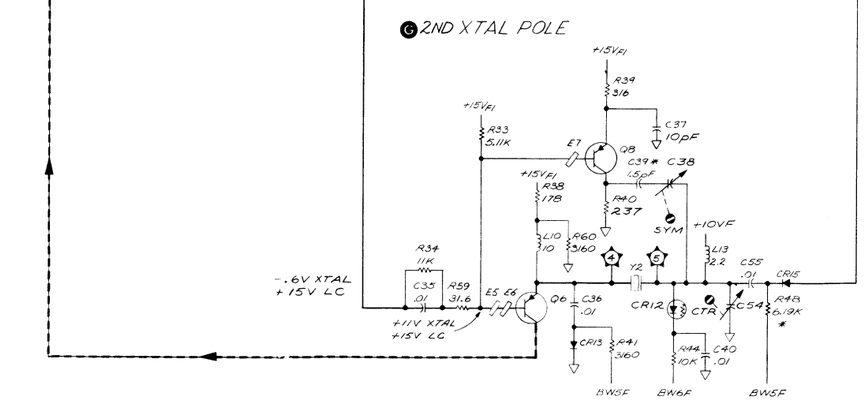

P1

PIN **	SIGNAL	TO/FROM	FUNCTION BLOCK
22	21.4 MHz IF	A25, P1-44	H
23	21.4 MHz IF	A28, P1-23	B
24	NC		
25	NC		
26	NC		
27	+15V		I
28	NC		
29	+10V TV		I
30	BW5	A21, P1-18	A
31	BW6	A21, P1-19	A
32	BW7	A21, P1-20	A
33	NC		
34	NC		
35	NC		
36	NC		
37	NC		
38	NC		
39	NC		
40	NC		
41	NC		
42	NC		
43	NC		
44	NC		

*PIN 1-21 GROUND ▽

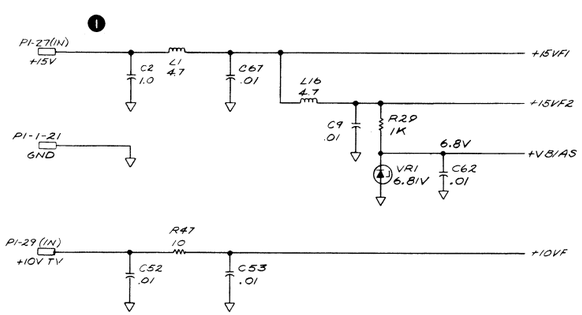

Scans by => ARTEK MEDIA © 2003-2005

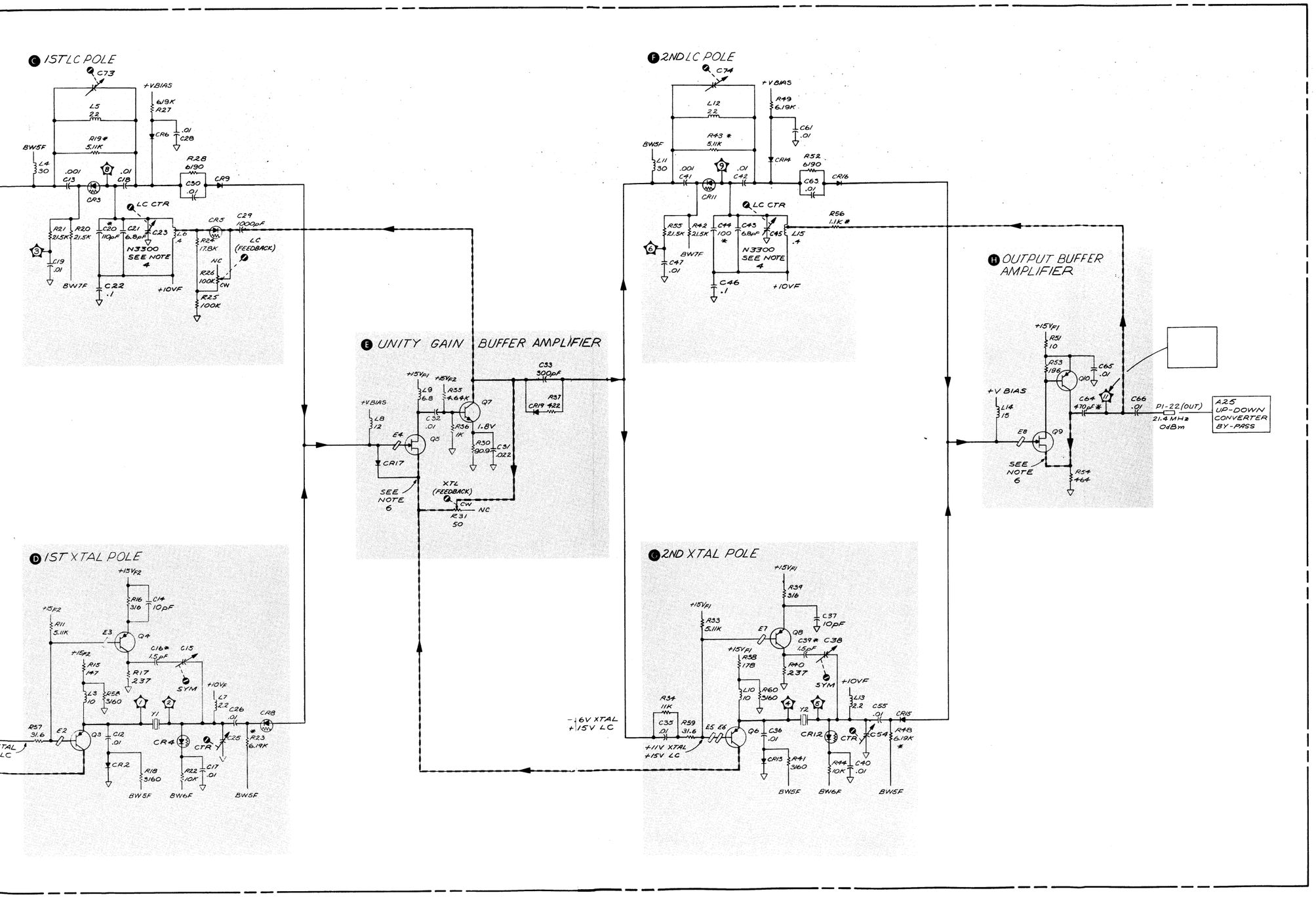

NOTES:

1. REFERENCE DESIGNATORS WITHIN THIS ASSEMBLY ARE ABBREVIATED. FOR COMPLETE DESIGNATOR, PREFIX WITH ASSEMBLY REFERENCE DESIGNATOR.
2. UNLESS OTHERWISE INDICATED:
   RESISTANCE IN OHMS (Ω)
   CAPACITANCE IN MICROFARADS (μF)
   INDUCTANCE IN MICROHENRIES (μH)
3. —⊘— DESIGNATES SHIELDING BEAD.
4. TEMPERATURE COMPENSATING CAPACITOR
5. * ASTERISK DENOTES FACTORY SELECTED COMPONENT. NOMINAL VALUE IS SHOWN.
6. SOURCE VOLTAGE SHOULD BE 0.2V TO 1.5V GREATER THAN THE GATE VOLTAGE.
7. VOLTAGES SHOULD BE MEASURED WITH 1KΩ OR GREATER AT PROBE TIP TO PREVENT OSCILLATION AND ERRONEOUS READINGS.
8.

BANDWIDTH	BW5	XTAL BW6	LC BW7
3MHz	+14.8V	-4V	+7V
1MHz	+14.8V	-4V	+8.5V
300KHz	+14.8V	-4V	+9V
100KHz	+14.8V	-4V	+13V
30KHz	-.5V	+13V	+14V
10KHz	-.5V	+9V	+14V
3KHz	-.5V	+8.5V	+14V
1KHz	-.5V	+7V	+14V

9. SIGNAL LEVELS AND TESTPOINT WAVEFORMS ASSUME THE FOLLOWING SETTINGS:
   GREEN (NORMAL) SETTINGS
   FREQUENCY SPAN/DIV: 5 OR 3.3 TIMES BANDWIDTH
   FREQUENCY BAND: .01 - 1.8 GHz
   INPUT ATTENUATION: 0dB
   REF LEVEL: -10dBm
   100MHz -10dBm (CAL OUTPUT) INTO INPUT ANALYZER TUNED TO SIGNAL
10. REFERENCE DESIGNATORS:

A27	
LAST USED	NOT USED
C74	C68-72,
CR17	C24, C56-59
L17	CR7
Q10	R24, R32, R50
R60	
VR1	
Y2	

21
A27

Figure 8-63. A27 Bandwidth Filter No. 1 Assembly, Schematic Diagram

Scans by => ARTEK MEDIA © 2003-2005

SERVICE SHEET 22

A24 STEP GAIN AMPLIFIER ASSEMBLY, CIRCUIT DESCRIPTION

The Step Gain Amplifier Assembly contains three amplifier stages to provide a 0 to 50 dB amplification of the 21.4 MHz third IF signal. A block diagram of the assembly is shown in Figure 8-64. The amplifier stages are selected by the front-panel REF LEVEL dBm switch. At the output of the final amplifier is a two-section bandpass filter. In conjunction with the front panel REFERENCE LEVEL FINE control, the Step Gain Amplifier Assembly also contains the circuitry for the 0 to 12 dB fine control for the reference level. A TEST/NORM switch is available; in TEST position, tests are made at a low gain level.

0 — 12 dB Control Ⓐ

The front-panel REFERENCE LEVEL FINE control provides approximately 0.3 to 12.3 dB of attenuation at the base of Q7. By regulating the current flow through the PIN diode CR3, the amount of signal attenuation is controlled. For example: if diode current flow is increased, more RF signal is shunted or bypassed to ground. C12 provides the RF ground and also isolates from ground the variable dc from the REFERENCE LEVEL FINE adjustment.

A minimum current flow through the PIN diode (maximum diode resistance) is established by the −12 dB adjustment R6 so that the diode is never completely cut off. Adjustment of R6 sets the 0.3 dB point and is adjusted with the REFERENCE LEVEL FINE control fully clockwise (−12 position).

The maximum current flow through the PIN diode is set by the 0 dB adjustment R5. R5 is adjusted to the 12.3 dB attenuation point with the REFERENCE LEVEL FINE control fully counterclockwise (0 position).

Transistors Q8 and Q9 are identical current sources. The maximum current is set by R5 in the common base circuit. Diode CR1 provides temperature compensation for the transistors.

Q8 provides current for a bias voltage applied to the anode of the PIN diode CR3. The voltage source consists of R6, R17, and CR2. CR2 provides temperature compensation for the PIN diode. Inductor L5 isolates the current source from the RF signal.

Q9 provides current for a variable voltage source at the cathode of CR3. The REFERENCE LEVEL FINE control, in parallel with R9, is used to match the PIN diode resistance changes. The voltage at the PIN cathode is varied to control CR3 current flow. When the REFERENCE LEVEL FINE control is fully clockwise, the PIN diode is at minimum conduction and maximum signal is applied to the base of Q7. Conversely, when the control is fully counterclockwise, the PIN diode is forward biased at maximum conduction, and minimum signal is applied to Q7.

Buffer amplifier Q7 operates as an emitter-follower and provides isolation between the 0 — 12 dB Control circuit and the 10 dB Amplifier circuit.

Step Gain Amplifiers Ⓑ Ⓒ Ⓓ

The three step gain amplifiers (10 dB Amplifier, 1st 20 dB Amplifier, and 2nd 20 dB Amplifier) can be considered as operational amplifiers. An equivalent circuit for the three stages is shown in Figure 8-65. The gain for each amplifier is $Av = 1 + R_f/R_i$. The feedback resistance R_f for the 10 dB Amplifier is R26, 562 ohms; and for the 20 dB Amplifiers is R32 and R38, 750 ohms. The input resistance R_i is a combination of a fixed series resistance (56.2 ohms) and the controlled resistance of the PIN diodes. The resistance of the PIN diodes is approximately 10 to 1000 ohms and increases as the forward bias current is decreased from 100 mA to 1 μA. R_i is approximately 260 ohms for the 10 dB Amplifier and 83 ohms for the 20 dB Amplifiers.Selection of the correct combination of step gain amplifiers is effected by the front-panel REF LEVEL dBm control. Rotating the switch grounds the emitter circuit of the selected amplifier(s), allowing current to flow through the PIN diode(s). The possible switch

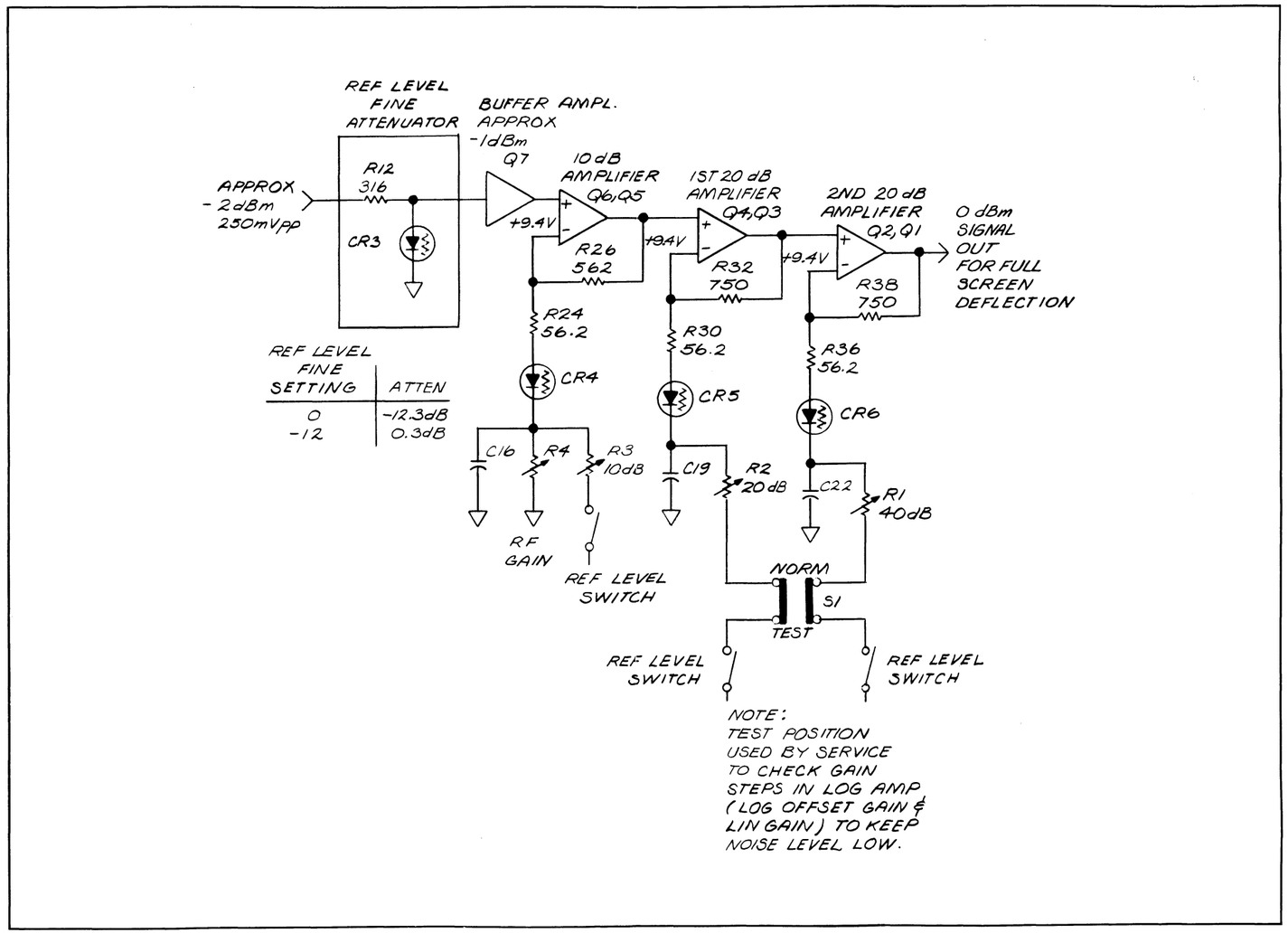

Figure 8-64. A24 Step Gain Amplifier Assembly, Block Diagram

A27 Bandwidth Filter No. 1 Assembly
SERVICE SHEET 21

combinations allow the gain to vary from unity (all switches open) to 50 dB maximum gain with all three emitter circuits grounded.

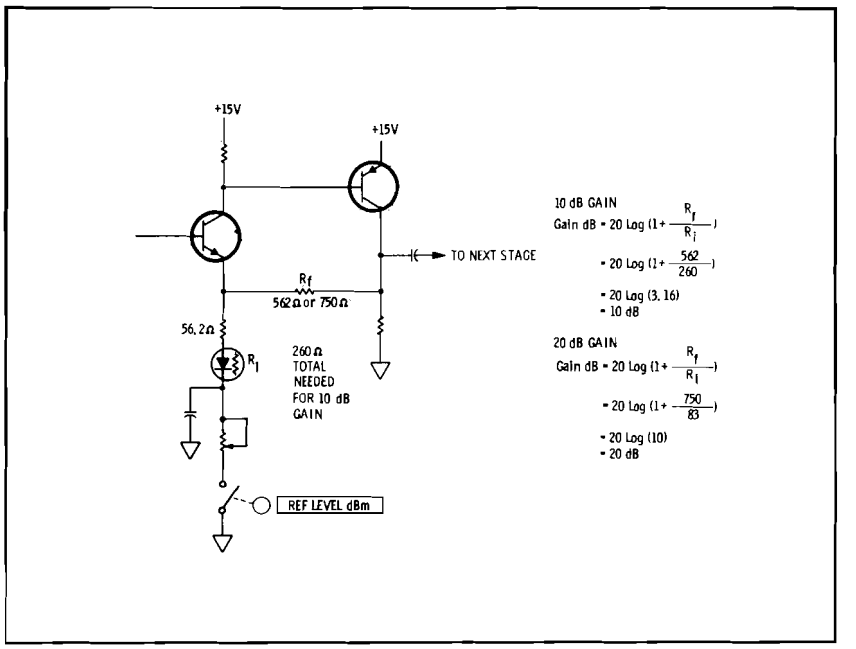

Figure 8-65. Equivalent Circuit For Step Gain Amplifiers

A TEST/NORM switch S1 is included in the emitter paths of the 20 dB step gain amplifiers. The switch provides a fixed 10 dB of gain for use when making LOG amplifier adjustments.

21.4 Bandpass Filter E

The output of the step gain amplifiers is coupled through a two-section bandpass filter. The filter consists of L9, L10, C24, and C25 and passes only the 21.4 MHz signal.

Scans by ARTEK MEDIA =>

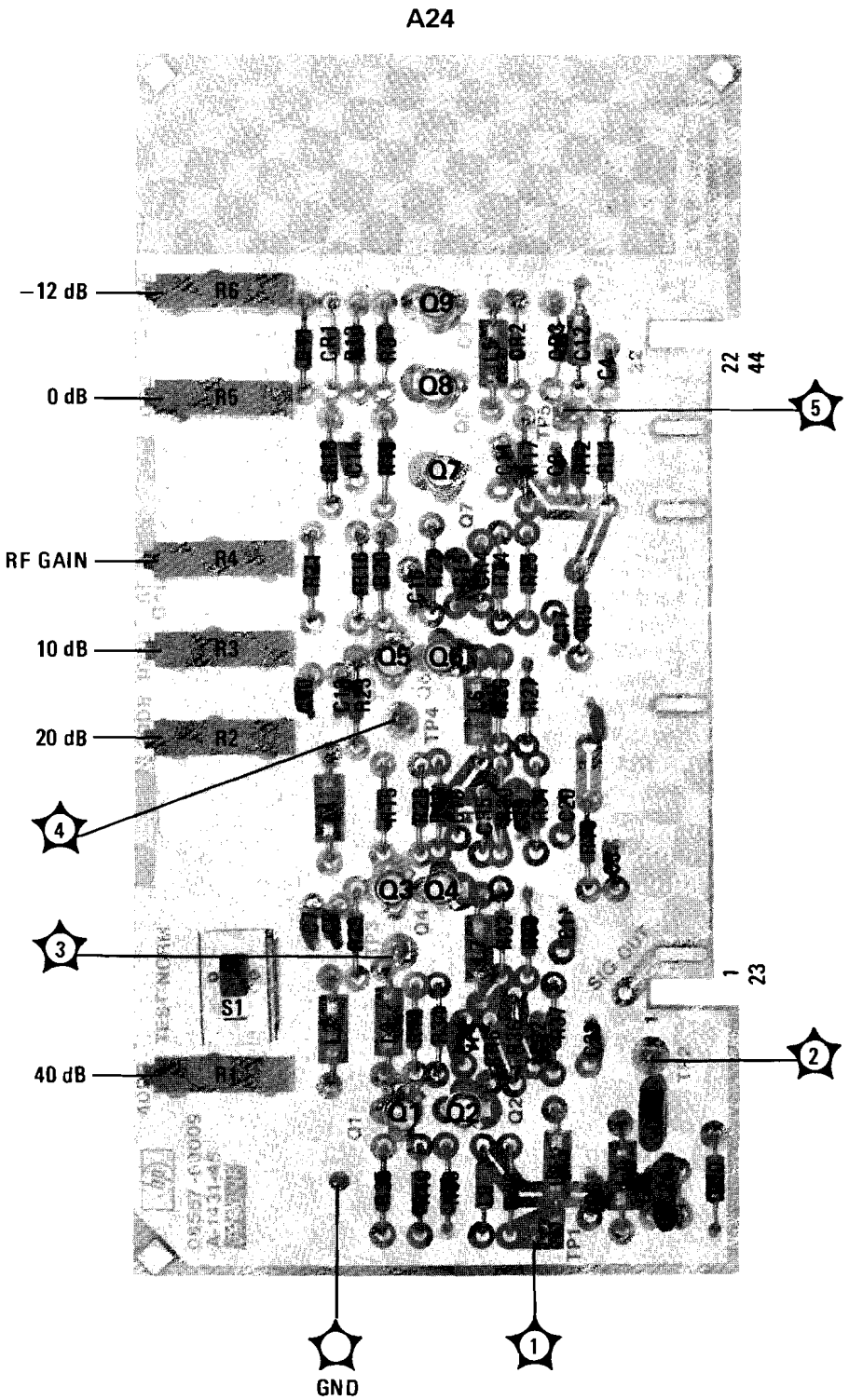

Figure 8-66. A24 Step Gain Amplifier Assembly, Component Locations

Scans by ARTEK MEDIA =>

Scans by => ARTEK MEDIA © 2003-2005

A24 STEP GAIN AMPLIFIER ASSY
08557-60009

P1

PIN	SIGNAL	TO/FROM	FUNCTION BLOCK
1 / 23	21.4 MHz / NC	A23P1-44	E
2 / 24	▽ / NC		F
3 / 25	▽ / -15V		F / F
4 / 26	▽ / NC		F
5 / 27	▽ / +15V		F / F
6 / 28	▽ / NC		F
7 / 29	▽ / +10V TV	A16P2-12	F / F
8 / 30	▽ / NC		F
9 / 31	▽ / NC		E
10 / 32	NC / NC		
11 / 33	▽ / IFG3	A2A1J1-14	F / D
12 / 34	▽ / IFG2	A2A1J1-16	E / C
13 / 35	▽ / IFG1	A2A1J1-18	F / B
14 / 36	▽ / NC		F
15 / 37	▽ / NC		F
16 / 38	▽ / NC		F
17 / 39	NC / ▽		F
18 / 40	▽ / FINE CW	A2A1J1-19	F / A
19 / 41	▽ / FINE W	A2A1J1-17	F / A
20 / 42	▽ / NC		F
21 / 43	▽ / NC		F
22 / 44	▽ / 21.4 MHz	A25P1-1	F / A

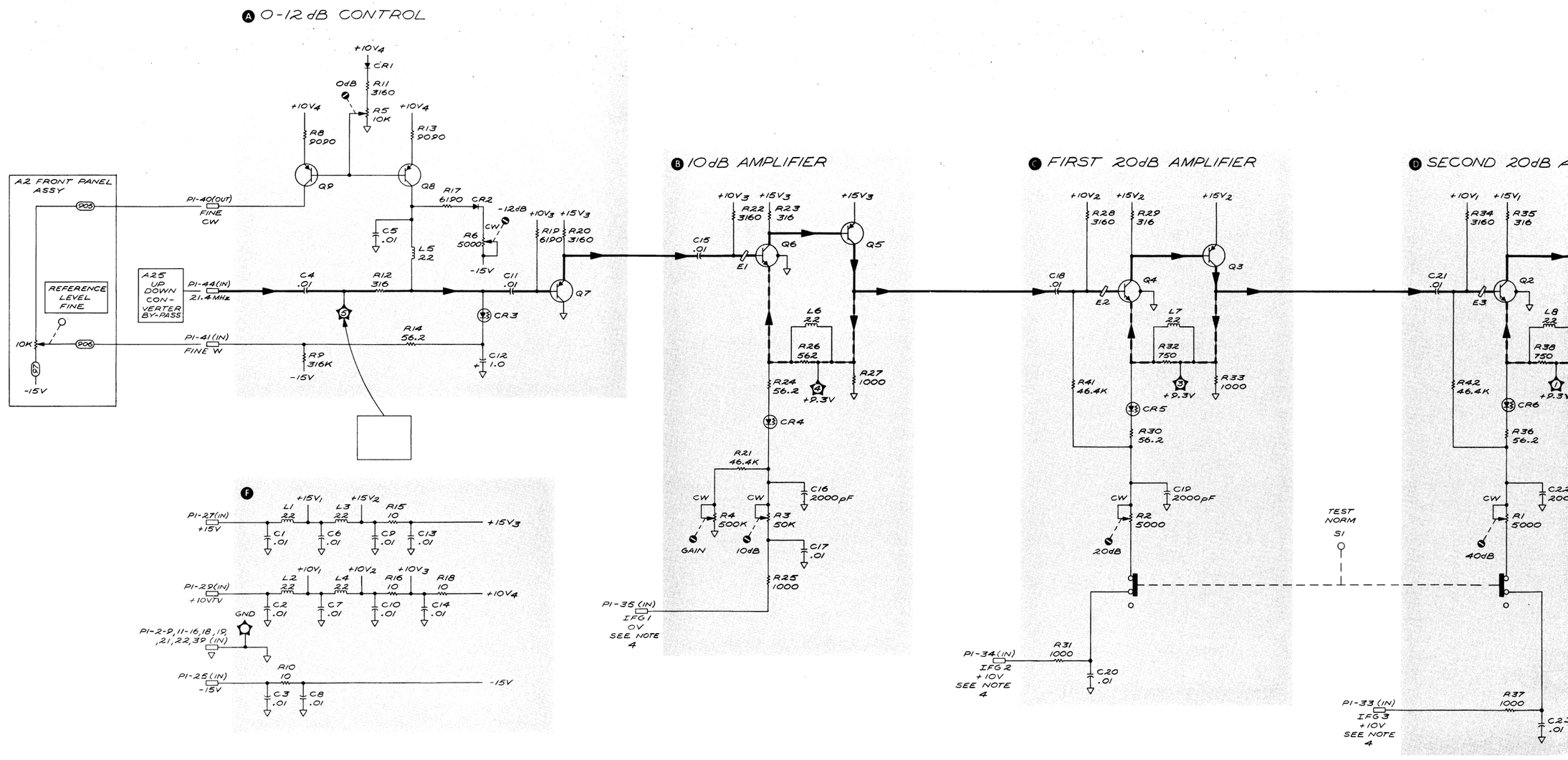

SERIAL PREFIX: 1712A APRIL 15, 1977

Scans by => ARTEK MEDIA © 2003-2005

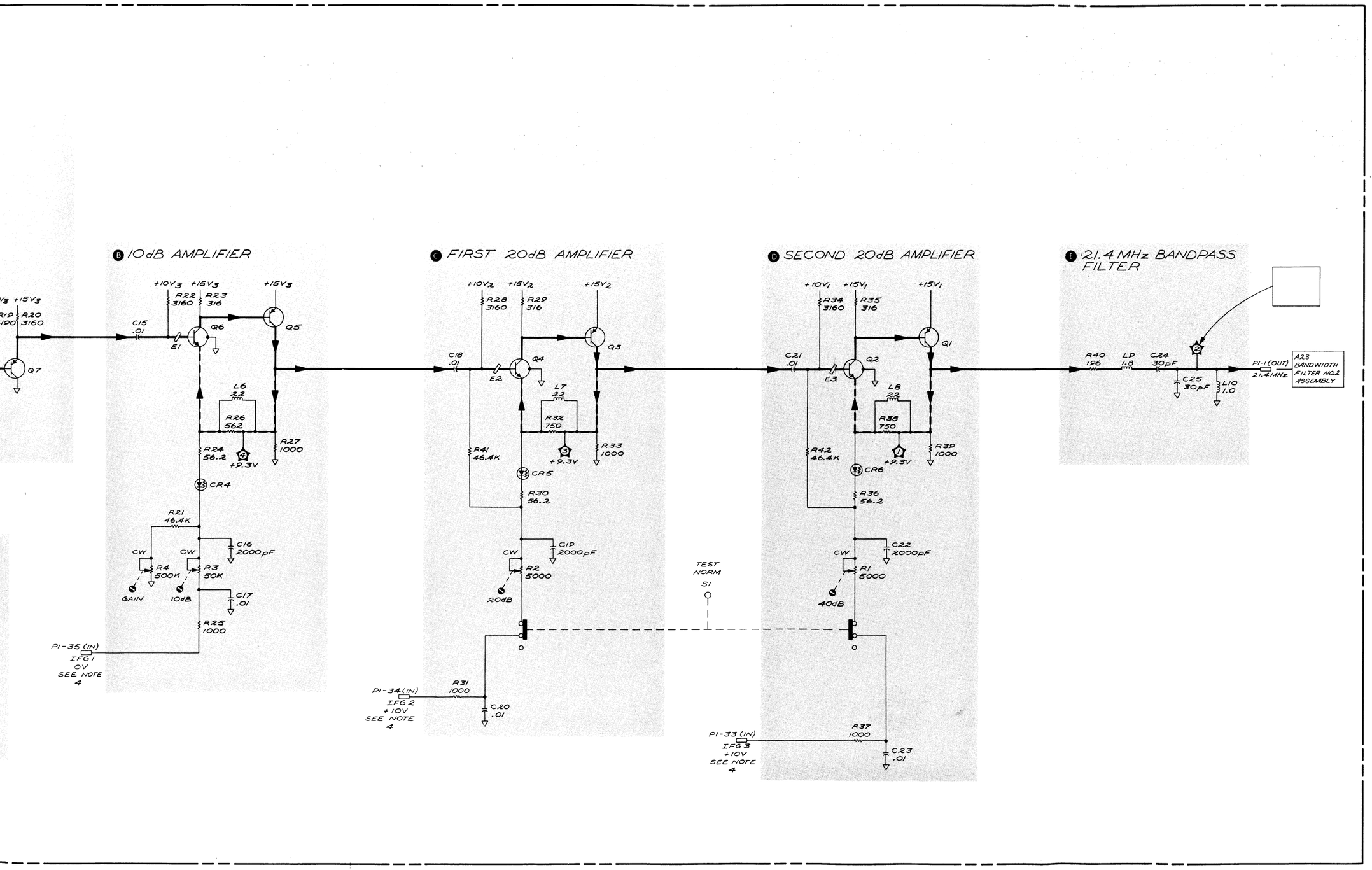

NOTES:

1. REFERENCE DESIGNATORS WITHIN THIS ASSEMBLY ARE ABBREVIATED. FOR COMPLETE DESIGNATOR, PREFIX WITH ASSEMBLY REFERENCE DESIGNATOR.
2. UNLESS OTHERWISE INDICATED:
   RESISTANCE IN OHMS (Ω)
   CAPACITANCE IN MICROFARADS (μF)
   INDUCTANCE IN MICROHENRIES (μH)
3. SIGNAL LEVELS AND TEST POINT WAVE FORMS ASSUME THE FOLLOWING SETTINGS:

   GREEN (NORMAL) SETTINGS.
   FREQUENCY SPAN/DIV: 5 OR 3.3 TIMES BANDWIDTH.
   FREQUENCY BAND: .01 – 1.8 GHz.
   INPUT ATTEN: 0dB.
   REF LEVEL: -10dBm.
   100 MHz –10dBm (CAL OUTPUT) SIGNAL INTO INPUT.
   ANALYZER TUNED TO SIGNAL.
4. CONTROL LINE VOLTAGES (INPUT ATTEN SET AT 0dB)

REF LEVEL	IFG1	IFG2	IFG3
0dBm	>+7V	+10V	+10V
-10dBm	0V	+10V	+10V
-20dBm	>+7V	0V	+10V
-30dBm	0V	0V	+10V
-40dBm	>+7V	0V	0V
-50dBm AND LOWER	0V	0V	0V

5. REFERENCE DESIGNATORS:

A24	
LAST USED	NOT USED
C25	
CR16	
E3	
L10	
Q9	
R42	R7

22
A24

Figure 8-67. A24 Step Gain Amplifier Assembly, Schematic Diagram

SERVICE SHEET 23
A23 BANDWIDTH FILTER NO. 2 ASSEMBLY, CIRCUIT DESCRIPTION

The Bandwidth Filter No. 2 Assembly is very similar to A27 Bandwidth Filter No. 1 Assembly, and the components have the same reference designators. Following are the differences between the two boards:

1. A23 has a limiting diode from the input (P1-23) to ground; A27 does not.

2. A23R3 in the 10 dB Buffer Amplifer is 121 ohms; A27R3 is 110 ohms. The result is that A23 has about 0.5 dB less gain than A27.

3. A23C64 in the Output Buffer Amplifier is 0.01μF; A27C64* is 470 pF. A27C64* is factory selected so that the REFERENCE LEVEL FINE control on the front panel will have the same effect in the 100 kHz bandwidth as it does in the 1 MHz bandwidth.

Refer to A27 Bandwidth Filter No. 1 Assembly for a complete circuit description.

A24 Step Gain Amplifier Assembly
◀ SERVICE SHEET 22

Scans by ARTEK MEDIA =>

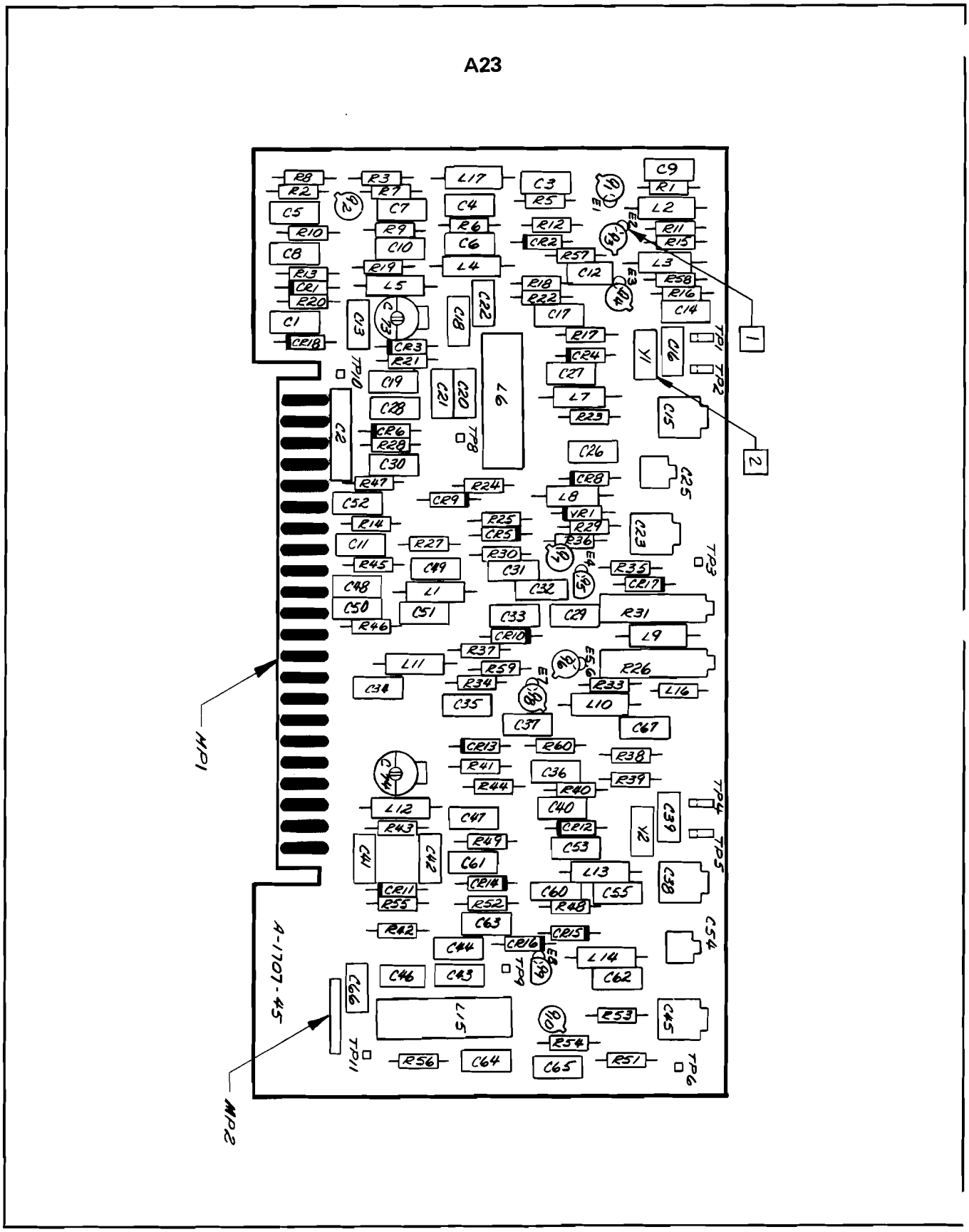

Figure 8-68. A23 Bandwidth Filter No. 2 Assembly, Component Locations

Scans by ARTEK MEDIA =>

Scans by => ARTEK MEDIA © 2003-2005

A23 BANDWIDTH FILTER NO. 2 ASSEMBLY
08565-60034

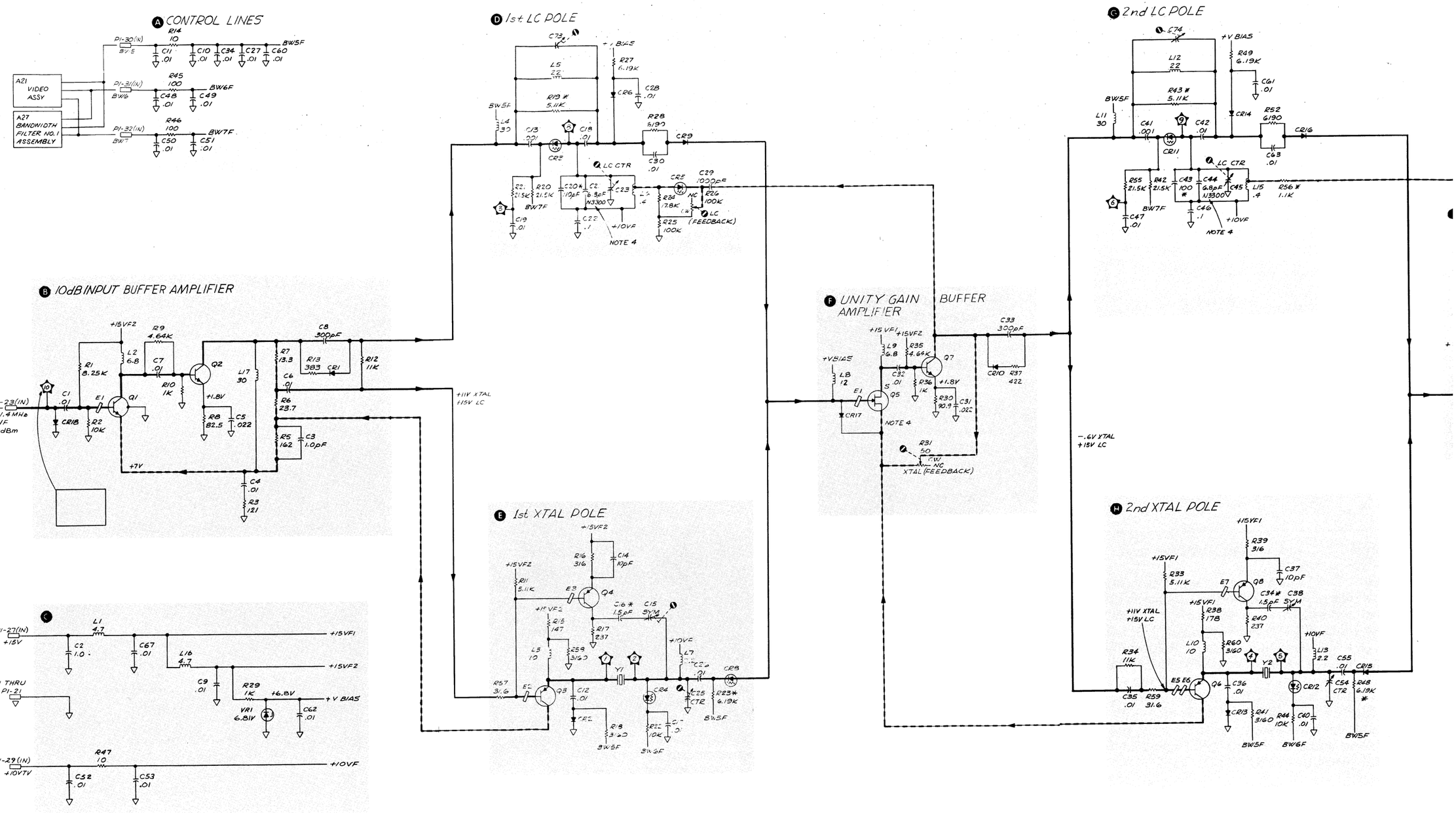

PIN **	SIGNAL	TO/FROM	FUNCTION BLOCK
22	21.4 MHz IF	A22 P1-44	I
23	21.4 MHz IF	A24 P1-1	B
24	NC		
25	NC		
26	NC		
27	+15V		
28	NC		
29	+10V TV		
30	BW5	A21 P1-18	A
31	BW6	A21 P1-19	A
32	BW7	A21 P1-20	A
33	NC		
34	NC		
35	NC		
36	NC		
37	NC		
38	NC		
39	NC		
40	NC		
41	NC		
42	NC		
43	NC		
44	NC		

** PIN 1 THRU 21 GND ▽

SERIAL PREFIX: 1712A APRIL 15, 1977

Scans by => ARTEK MEDIA © 2003-2005

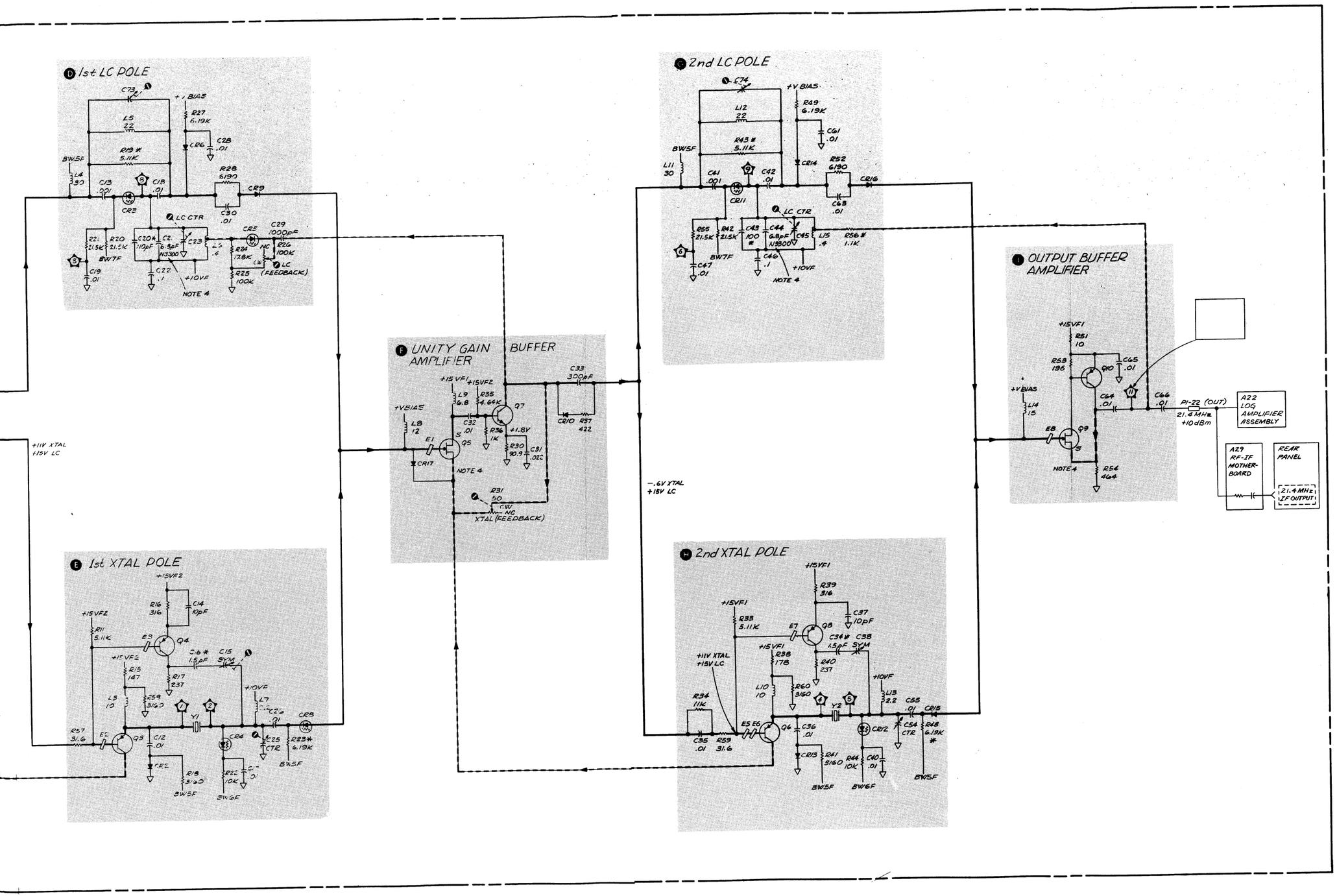

NOTES:

1. REFERENCE DESIGNATORS WITHIN THIS ASSEMBLY ARE ABBREVIATED. FOR COMPLETE DESIGNATOR, PREFIX WITH ASSEMBLY REFERENCE DESIGNATOR.
2. UNLESS OTHERWISE INDICATED:
   RESISTANCE IN OHMS (Ω)
   CAPACITANCE IN MICROFARADS (μF)
   INDUCTANCE IN MICROHENRIES (μH)
3. ⏚ DESIGNATES SHIELDING BEAD.
4. TEMPERATURE COMPENSATING CAPACITOR.
5. SOURCE VOLTAGE SHOULD BE .2V TO 1.5V GREATER THAN THE GATE VOLTAGE.
6. ASTERISK (*) DENOTES FACTORY SELECTED COMPONET. NOMINAL VALUE IS SHOWN.
7. VOLTAGE SHOULD BE MEASURED WITH 1KΩ OR OV GREATER RESISTOR AT PROBE TIP TO PREVENT OSCILLATIONS.
8.

BANDWIDTH	BW5	XTAL BW6	LC BW7
3 MHz	+14.8	-4	+7
1 MHz	+14.8	-4	+8.5
300 kHz	+14.8	-4	+9
100 kHz	+14.8	-4	+13
30 kHz	-.5	+13	+14
10 kHz	-.5	+9	+14
3 kHz	-.5	+8.5	+14
1 kHz	-.5	+7	+14

9. SIGNAL LEVELS AND TESTPOINT WAVEFORMS ASSUME THE FOLLOWING SETTINGS:
   GREEN (NORMAL) SETTING
   FREQUENCY SPAN/DIV: 5 OR 3.3 TIMES BANDWIDTH
   FREQUENCY BAND: .01 - 1.8 GHz
   INPUT ATTENUATOR: 0 dB
   REF LEVEL: -10 dBm
   100 MHz -10 dBm (CAL OUTPUT) INTO INPUT
   ANALYZER TUNED TO SIGNAL
10. REFERENCE DESIGNATORS

A23	
LAST USED	NOT USED
R60	R4,32,50
L17	
C74	C68-72,24,36-59
CR18	CR7
VR1	
Q10	
Y2	

23
A23

Figure 8-69. A23 Bandwidth Filter No. 2 Assembly, Schematic Diagram

Scans by => ARTEK MEDIA © 2003-2005

SERVICE SHEET 24
A22 LOG AMPLIFIER ASSEMBLY, CIRCUIT DESCRIPTION

The Log Amplifier Assembly provides the ability to display signals in either a linear mode or 70 dB log mode. It also operates with the Step Gain Amplifier Assembly to provide the last 40 dB of step gain amplification of the 21.4 MHz IF signal.

The Log Amplifier Assembly has seven amplifier stages, with each stage capable of providing both linear and logarithmic amplification. Following the amplifier stages, the amplified IF signal is detected to produce the vertical signal for the display. An offset circuit, following the detector, is used in the log mode to offset the vertical output in steps equivalent to 40 dB of IF gain.

Amplifier Stages A B C D E F G

The seven amplifier stages are similar in operation. They vary only in their use as linear or log amplifiers, depending on the setting of the AMPLITUDE SCALE switch on the front panel.

Log Mode of Operation

The seven amplifier stages limit the gain in sequence to provide 70 dB of log amplification. Each stage consists of an emitter follower used as a voltage source to drive a common-base amplifier whose gain decreases with increasing signal level.

Log Amplifier Gain. A simplified log amplifier stage is shown in Figure 8-70. In the log mode of operation Q23 is on, forward biasing the log diodes CR11 and CR13, which are Schottky diodes with a forward bias voltage of approximately 0.4V. The gain of the amplifier is set by the ratio of R34 to the total resistance R_T between the emitters of Q3 and Q4. The formula for computing gain is:

$$\text{Gain} = 1 + \frac{R34}{R_T}$$

R_T is at a minimum (approximately 150 ohms) for small signals when the ac signal current in the log diodes CR11 and CR13 is small compared to their dc bias current. As the ac signal level is increased, the ac signal current increases to the level of the dc bias current and R_T increases because of current limiting in the diodes.

The initial gain of the stage (10 dB) is set by the dc bias current through the log diodes. The bias current is controlled by the temperature compensated −10V supply at the emitter of Q23. The final gain of the stage (0 dB) is set by the circuit configuration (R_T becomes very large) and can be set further by selection of R46*.

Linear Mode of Operation

Linear Gain. In LIN mode, the limiting action is removed from each of the seven amplifier stages. Referring to Figure 8-70, Q23 is turned off in LIN mode and the dc bias current in the log diodes CR11 and CR13 is zero. With dc bias current zero, the total resistance R_T is maximum and the stage has approximately unity gain. In some stages, the log diodes may be turned on by an IF gain step (IFG5 and IFG6) when −10V is applied to either CR1 or CR2. However, the signal levels in these stages will always be low enough in LIN mode that no limiting takes place in the log diodes.

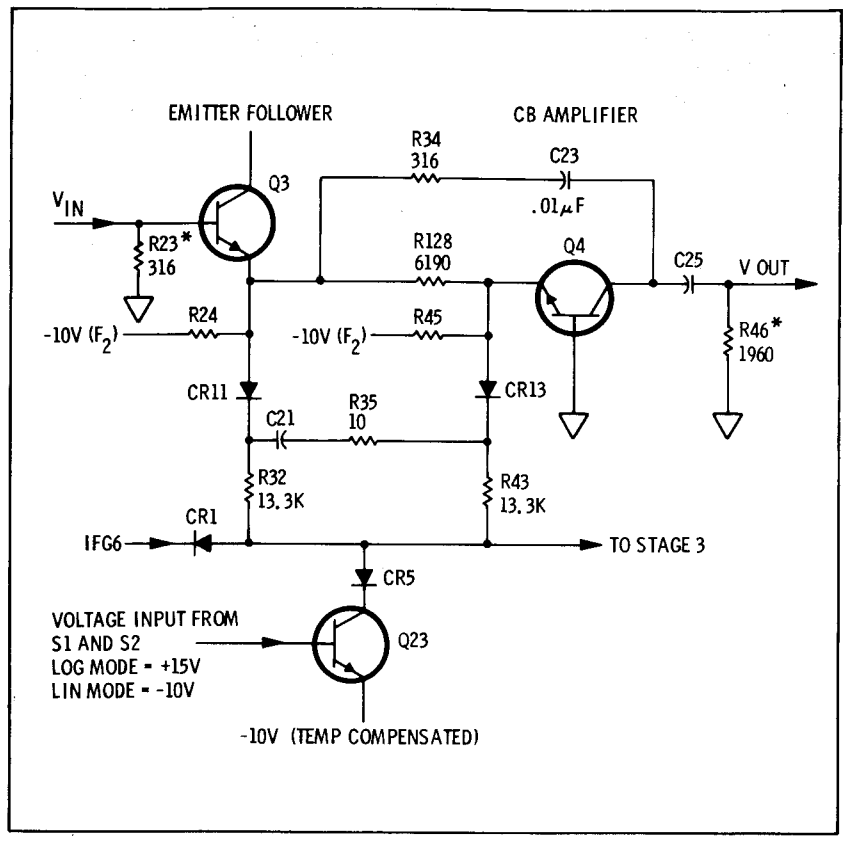

Figure 8-70. Simplified Log Amplifier Stage

Linear Step Gain. The 10 dB of linear gain of each stage at low signal levels in the log mode is used in the LIN mode as switched gain. The gain can be switched on or off by switching the bias current. This type of gain is used in amplifier stages 2, 3, and 4 to obtain 30 dB of gain and is switched in as follows. With REF LEVEL dBm at −80, the −10V is routed to the IF Gain (IFG5) control line. The −10V forward biases CR2 and the −10V is applied to the log diodes CR20 and CR21 in stage 4, providing 10 dB of gain. When REF LEVEL dBm is at −90, the −10V is routed to IFG6, CR1, and the log diodes in stages 2 and 3, providing 20 dB of gain. All three stages (2, 3, and 4) are activated when REF LEVEL dBm is at −100, providing 30 dB of gain.

Alternate Linear Gain. In the last three amplifier stages, the signal current is too large for the bias current of the log diodes, and an alternate method to obtain linear gain must be used. This alternate gain path selects 10 dB of gain as follows. With REF LEVEL dBm in −70, −80, −90, or −100, −10V is routed to IF

Scans by => ARTEK MEDIA © 2003-2005

Gain 4 (IFG4), R74, and the cathode of CR26. The 3480-ohm resistor R74 allows a higher dc bias current for CR26. This provides a signal path through R84 and CR26 that does not limit.

In the sixth and seventh stages, the alternate signal path is used to set the gain at about 5 dB per stage. The purpose of this fixed gain is to scale properly between the LOG and LIN modes. These stages are activated by the −10V from the LOG/LIN switch A2S2 to the cathodes of CR14 (R38) and CR29 (R120). R16, in the signal path of the seventh stage, is factory selected to establish the correct linear gain for the individual Log Amplifier Assembly.

LOG/LIN Relationship H

In LIN mode, when approximately 700 mV rms (+10 dBm) is applied to the input of the log amplifier, the voltage at the output of stage 7 (TP7) is about 1.5 Vrms. With the same input signal in LOG mode the output at TP7 is about 2.0 Vrms. To maintain equal relationship with maximum input signal (trace at the top of the display) the output in LOG mode must be attenuated. This relationship is set by using a PIN diode attenuator and the LOG/LIN adjustment R2.

PIN Diode Attenuator. In LIN mode, −10V is applied to the base of Q16, turning it on. This causes the PIN diode CR16 to be at maximum conduction. The −10V is also coupled to the anode of PIN diode CR18 and it is off. Therefore, in LIN mode there is no attenuation, and the signal from Stage 7 is coupled directly to emitter follower Q17. However, in LOG mode. +15V is applied to CR18 anode and to the base of Q16; CR18 is forward biased and Q16 is open. PIN diode CR16 operates with a fixed bias current set by CR2, R53, and R60. PIN diodes CR16 and CR18 form a voltage divider to the incoming signal with CR18 operating as a variable impedance. The amount of signal attenuation depends upon the impedance of CR18, which is set by the LOG/LIN adjustment R2.

Log Step Gain. The last 40 dB of log step gain is produced in the 0 — 40 dB Amplifier circuit (log offset) following the detector. When this gain is used, there is already a full 50 dB of gain in the Step Gain Amplifier Assembly, so the noise of the analyzer is amplified into the log range of the Log Amplifier Assembly. This makes further amplification unnecessary since any signal below the log range of the Log Amplifier Assembly would be buried in the noise. The output of the detector can then be offset in 100-mV steps corresponding to 10 dB of IF amplification. This offset is provided by Q22 operating as a stepped current source into R121. With the LOG/LIN switch A2S2 in the LOG position, +15V is routed through the contact closures of the REF LEVEL dBm switch A2S1 to the IF gain control lines IFG4, IFG5, and IFG6. With an IF gain control line connected to +15V through A2S1 and A2S2, a log-shift diode CR30, CR31, or CR32 is forward biased and this bias current, determined by R122, R123, or R124 flows into the emitter of current source Q22. IFG4 and IFG5 each provide 10 dB (100 mV) of log offset gain and IFG6 provides 20 dB (200 mV). The LOG GAIN adjustment R1 sets the operaing point of Q22 for 100 mV steps.

Detector I

The signal output is applied to a low impedance driver Q17, which is the voltage source to drive Q18. Q18, the current driver for the detector, converts voltage variations into current variations. Q19, a half-wave rectifier, is biased just below cutoff by CR24. When the input ac signal is positive, Q19 is in conduction but is cut off during the negative transition. The detector output is routed to a low pass filter and unity-gain buffer amplifier, Q20 and Q21, to provide the video output.

−10V and −7V Regulators L

Temperature compensation is provided for the −10V and −7V regulators. Q24 is connected as a diode and operates as the temperature sensing element. Temperature variations cause changes in collector voltage. The voltage change at Q24 is applied to U1A and to the positive input of U1B to regulate the two voltages. The −10V regulator provides approximately 10V to a filter network for distribution throughout the Log Amplifier Assembly. The regulated −7V is the current source for the PIN diode CR18.

LIN Gain Adjust. The linear gain steps are se to 10 dB per step by adjusting the LIN GAIN control R3. This control changes the output voltage of the −10V regulator U1A. Changing the −10V adjusts the diode bias current to the proper value for 10 dB gain steps.

Adjustments

NOTE

For complete adjustment procedure see Section V.

LIN GAIN Adjustment. The LIN GAIN adjustment R3 adjusts the −10V regulator output voltage. Howver, this voltage is set for 10 dB linear gain steps and not for −10V.

LOG/LIN Adjustment. The LOG/LIN adjustment R2 is used primarily to adjust the shape of the 70 dB log amplifier input versus output curve (log fidelity). This adjustment is made after the LIN GAIN adjustment since the −10V regulator output also affects the log fidelity curve. The relationship between LOG and LIN modes is primarily adjusted by selecting R16*. The value of R16 sets the initial gain in the LIN Mode with 0 dB linear step gain. Only small variations between LOG and LIN outputs are corrected with R2.

LOG GAIN Adjustment. The LOG GAIN adjustment R1 is set for 100 mV steps (a total of 400 mV) at the vertical output (in 10 dB/div) with constant input.

NOTE

The TEST/NORM switch in the Step Gain Amplifier Assembly, when in TEST position, limits the gain of the Step Gain Amplifier Assembly to 10 dB. This allows the LOG and LIN step gain controls to be tested with a low level of input noise.

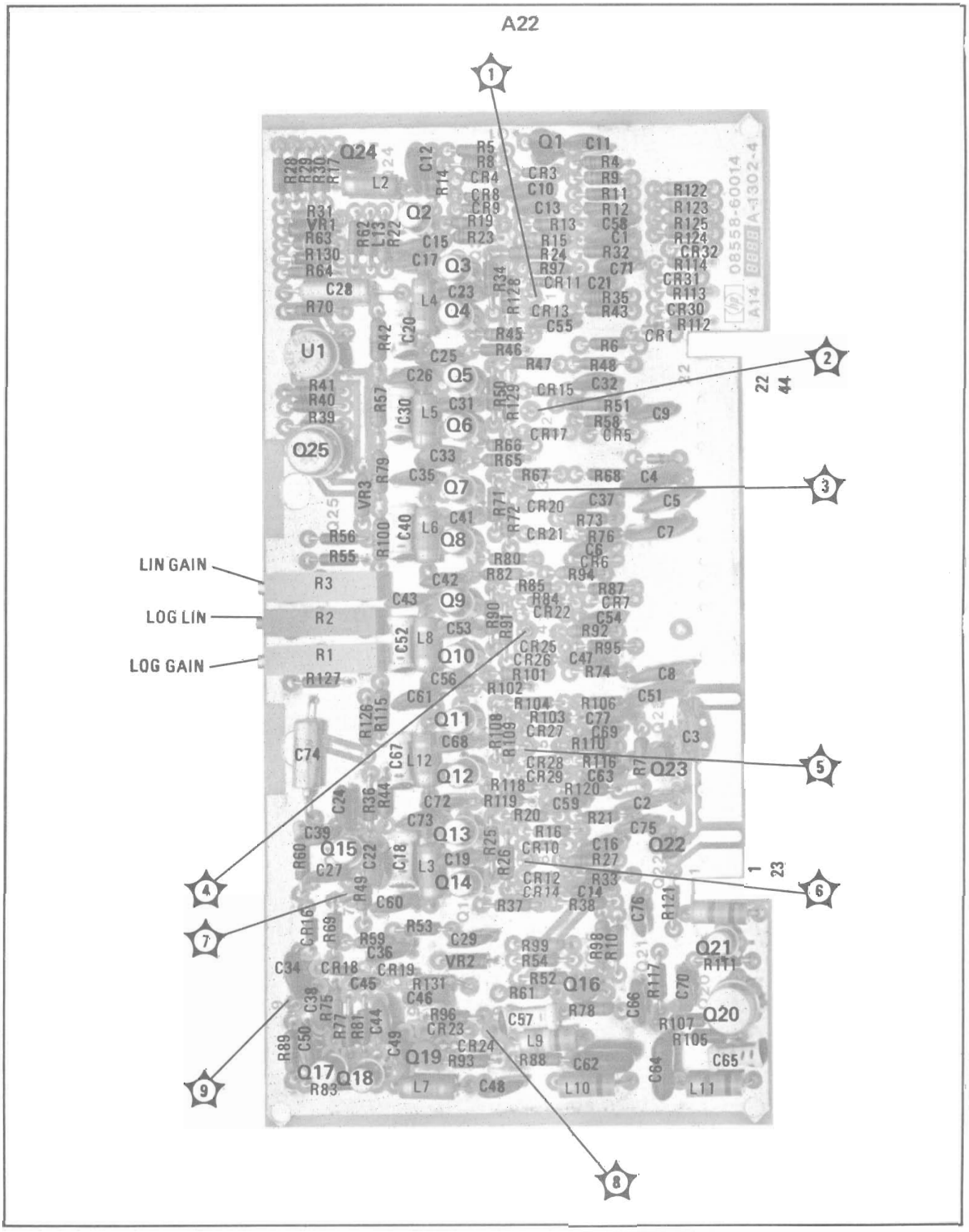

Figure 8-71. A22 Log Amplifier Assembly, Component Locations

Scans by ARTEK MEDIA =>

Scans by => ARTEK MEDIA © 2003-2005

A22 LOG AMPLIFIER ASSEMBLY
08558-60014

P1

PIN	SIGNAL	TO/FROM	FUNCTION BLOCK
1	▽		M
23	▽		M
2	VIDEO	A21P1-1	J
24	▽		M
3	▽		M
25	-12.6V	A29R3	M
4	▽		M
26	▽		M
5	▽		M
27	+15V		M
6	▽		M
28	▽		M
7	▽		M
29	▽		M
8	-10VTV	A2A1J2-30	K
30	▽		M
9	▽		M
31	LOG/LIN	A2A1J1-49	K
10	▽		M
32	▽		M
11	▽		M
33	LOG 21.4MHz AUX OUT	NOT CONNECTED	I
12	▽		M
34	▽		M
13	▽		M
35	▽		M
14	▽		M
36	▽		M
15	▽		M
37	▽		M
16	▽		M
38	1FG4	A2A1J1-12	K
17	▽		M
39	1FG5	A2A1J1-10	K
18	▽		M
40	1FG6	A2A1J1-8	K
19	▽		M
41	▽		M
20	▽		M
42	▽		M
21	▽		M
43	▽		M
22	▽		M
44	21.4MHz	A23P1-1	A

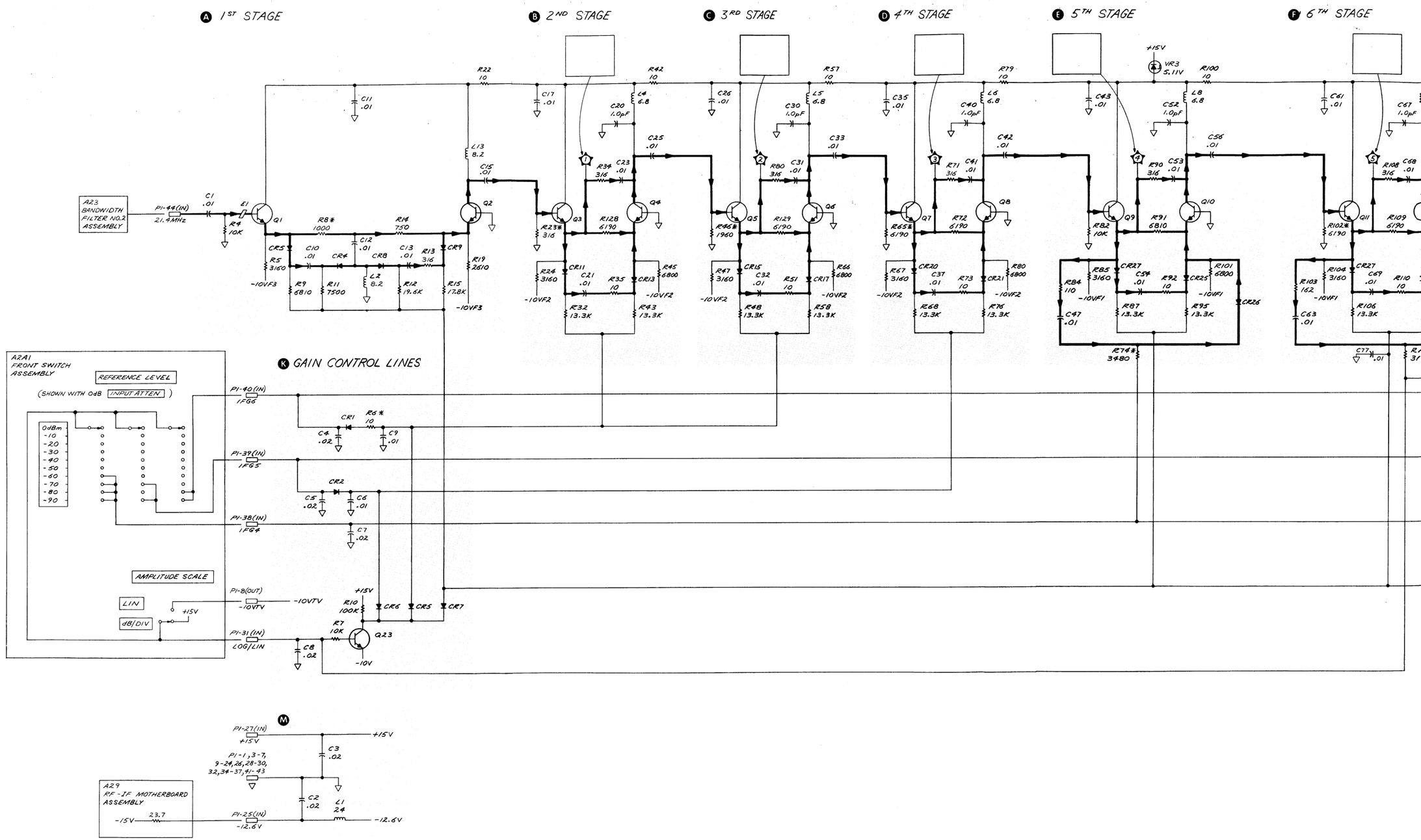

Scans by => ARTEK MEDIA © 2003-2005

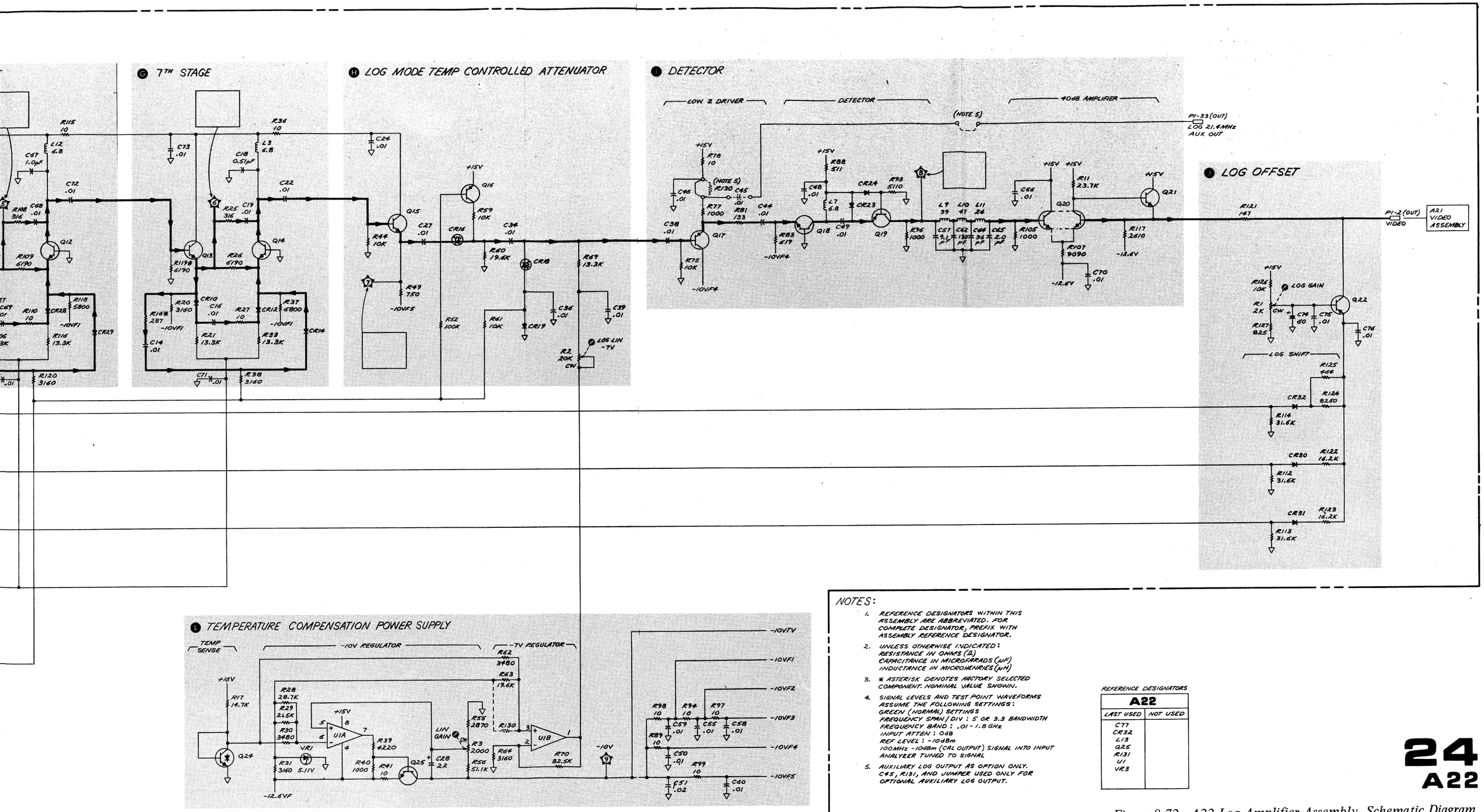

NOTES:

1. REFERENCE DESIGNATORS WITHIN THIS ASSEMBLY ARE ABBREVIATED. FOR COMPLETE DESIGNATOR, PREFIX WITH ASSEMBLY REFERENCE DESIGNATOR.
2. UNLESS OTHERWISE INDICATED:
   RESISTANCE IN OHMS (Ω)
   CAPACITANCE IN MICROFARADS (μF)
   INDUCTANCE IN MICROHENRIES (μH)
3. * ASTERISK DENOTES FACTORY SELECTED COMPONENT. NOMINAL VALUE SHOWN.
4. SIGNAL LEVELS AND TEST POINT WAVEFORMS ASSUME THE FOLLOWING SETTINGS:
   GREEN (NORMAL) SETTINGS
   FREQUENCY SPAN/DIV : 5 OR 3.3 BANDWIDTH
   FREQUENCY BAND : .01 - 1.8 GHz
   INPUT ATTEN : 0dB
   REF LEVEL : -10dBm
   100MHz -10dBm (CAL OUTPUT) SIGNAL INTO INPUT ANALYZER TUNED TO SIGNAL
5. AUXILIARY LOG OUTPUT AS OPTION ONLY. C45, R131, AND JUMPER USED ONLY FOR OPTIONAL AUXILIARY LOG OUTPUT.

REFERENCE DESIGNATORS

A22	
LAST USED	NOT USED
C77	
CR32	
L13	
Q25	
R131	
U1	
VR3	

24
A22

Figure 8-72. A22 Log Amplifier Assembly, Schematic Diagram

Scans by => ARTEK MEDIA © 2003-2005

SERVICE SHEET 25
A21 VIDEO ASSEMBLY, CIRCUIT DESCRIPTION

The Video Assembly contains the Video Filter Resistor Select, the RESOLUTION BW control circuitry (consisting of the Crystal-LC BW Select, the Crystal Bandwidth and Video Filter Capacitor Select, and the LC Bandwidth and Video Filter Capacitor Select), and the Amplitude Scale circuitry (consisting of the First Video Amplifier, the Scale Attenuator, and the Second Video Amplifier).

Video filtering is accomplished by the use of an RC filter. The amount of filtering is proportional to the resolution bandwidth; therefore, whenever the VIDEO FILTER switch or the RESOLUTION BW switch position is changed, it is necessary to change the degree of filtering. The VIDEO FILTER switch varies the resistive portion of the RC filter by switching in different resistors in the Video Filter Resistor Select circuit. The RESOLUTION BW switch selects the capacitive portion of the RC filter by switching in different capacitors in the Crystal Bandwidth and Video Filter Capacitor Select circuit and the LC Bandwidth and Video Filter Capacitor Select circuit.

When the SWEEP TIME/DIV switch is set to AUTO, the sweep time is optimized to maintain amplitude calibration and the fastest possible sweep time. Therefore, when either the VIDEO FILTER or RESOLUTION BW setting is changed, the sweep time is changed by varying the current supplied by the Auto Sweep Time - Video Filter line or the Auto Sweep Time - Bandwidth - Fast Sweep line.

The Crystal-LC Bandwidth Select circuit decodes information from the RESOLUTION BW switch and controls the BW5 line to determine whether crystal or LC filters are used in the Bandwidth Filter No. 1 and No. 2 Assemblies. LC filtering is used for the four wider bandwidths (100 kHz to 3 MHz) and crystal filtering, for the four more narrow bandwidths (1 kHz to 30 kHz.)

When LC filtering is used, the LC Bandwidth and Video Filter Capacitor Select circuit controls (through the BW7 line) the current for the PIN diodes in the Bandwidth Filter No. 1 and No. 2 Assemblies. When crystal filtering is used, the Crystal Bandwidth and Video Filter Capacitor Select circuit performs this function through the BW6 line.

Changes in the AMPLITUDE SCALE are accomplished by first amplifying the video signal and then attenuating it various amounts. The accuracy of absolute measurements is maximized by minimizing errors introduced in the peak signal voltage. This is accomplished by the First Video Amplifier (see Figure 8-73), which first offsets the 0V to 0.8V video signal to −0.72V to 0V and then amplifies it by a gain of 9. This amplified signal is then attenuated in the Scale Attenuator, which is controlled by the AMPLITUDE SCALE setting on the front panel. The Second Video Amplifier offsets the signal again so that 0.8V represents a full-screen deflection and amplifies it by a gain of 1.11. The signal is then sent to the Y Deflection Amplifier Assembly to be displayed on the CRT, to the Z Axis Amplifier Assemblyfor the baseline clipper, to the Sweep Generator Assembly to trigger the sweep in the VIDEO mode, and to the rear panel for the VERTICAL OUTPUT.

Video Filter Resistor Select (A)

With the VIDEO FILTER switch in OFF, +15V is routed through the switch to the bases of Q4 and Q6. These transistors turn on, turning on Q1 and grounding the AST-VF (Auto Sweep Time-Video Filter) line to the Sweep Generator Assembly. The only series resistance the signal sees is the output of the Log Amplifier Asembly (approximately 147Ω). In the .3 position, Q14 and Q16 are turned on, turning on Q12 to route the VIDEO signal through R11 and to place R16 in parallel with R40 on the AST-VF line. The .1, .03, .01, and .003 positions operate in the same way except that in the .003 position, only R40 is connected to the AST-VF line.

The .003 position can also be activated by +15V routed through the FREQUENCY SPAN MODE switch when it is in the FULL BAND or the 1.7 — 22 GHz SPAN mode. In the NOISE AVG positions, Q39 is turned on, turning on Q37 to route the signal through R35.

Crystal-LC Bandwidth Select (B)

The video bandwidth is further reduced by turning on Q26 and Q21, shunting the signal with C8. The AST BW-FS (Auto Sweep Time Bandwidth-Fast Sweep) line to the Sweep Generator Assembly, used to adjust the AUTO sweep time, is shunted to ground through R81.

Either LC or crystal filtering is selected by routing +15Vthrough through five dc control lines (BWO through BW4) from the front-RESOLUTION BW switch. Each of the lines BW1 through BW4 selects one of the crystal and one of the LC bandwidths. The BW0 line determines whether crystal or LC bandwidth filtering is selected. In the LC mode, a +15V is applied to the base of Q9, which turns on Q15 and turns off Q12, causing BW5 to reach about +14.8V. This enables (in the Bandwidth Filter No. 1 and No. 2 Assemblies) only the LC bandwidths. When BW0 is low, Q9 and Q15 are off and Q12 is on, causing BW5 to go to about −0.5V. This enables only the crystal bandwidths.

Crystal Bandwidth and Video Filter Capacitor Select (C)

When 3 kHz BW (BW2) is selected, two actions take place. +15V is routed through the RESOLUTION BW switch to the base of Q7 and Q32. These two transistors turn on, turning on Q8 and Q36 and grounding one end of C2, C6, and R72. C2 (the effect of C6 is negligible) forms the capacitive portion of the LC lowpass Video Filter. The current through R72 is applied to the Sweep Generator Assembly for control of the AUTO sweep time. At the same time, BW0 is open, allowing BW5 to go low and turn off the LC section of the Bandwidth Filter No. 1 and No. 2 Assemblies. This also keeps Q38 and Q40 off, enabling the crystal bandwidths to be controlled individually. When Q7 and Q8 turn on, the PIN diode current in BW6 is set by the voltage source Q5 and R55. The 3 kHz BW ADJ R55 adjusts the 3 kHz resolution bandwidth to allow for PIN diode tolerances. When other crystal bandwidths are selected, other transistor pairs are turned on. This changes the PIN diode current in BW6, varies the AUTO sweep current in the AST BW-FS line, and selects the capacitors used in the video

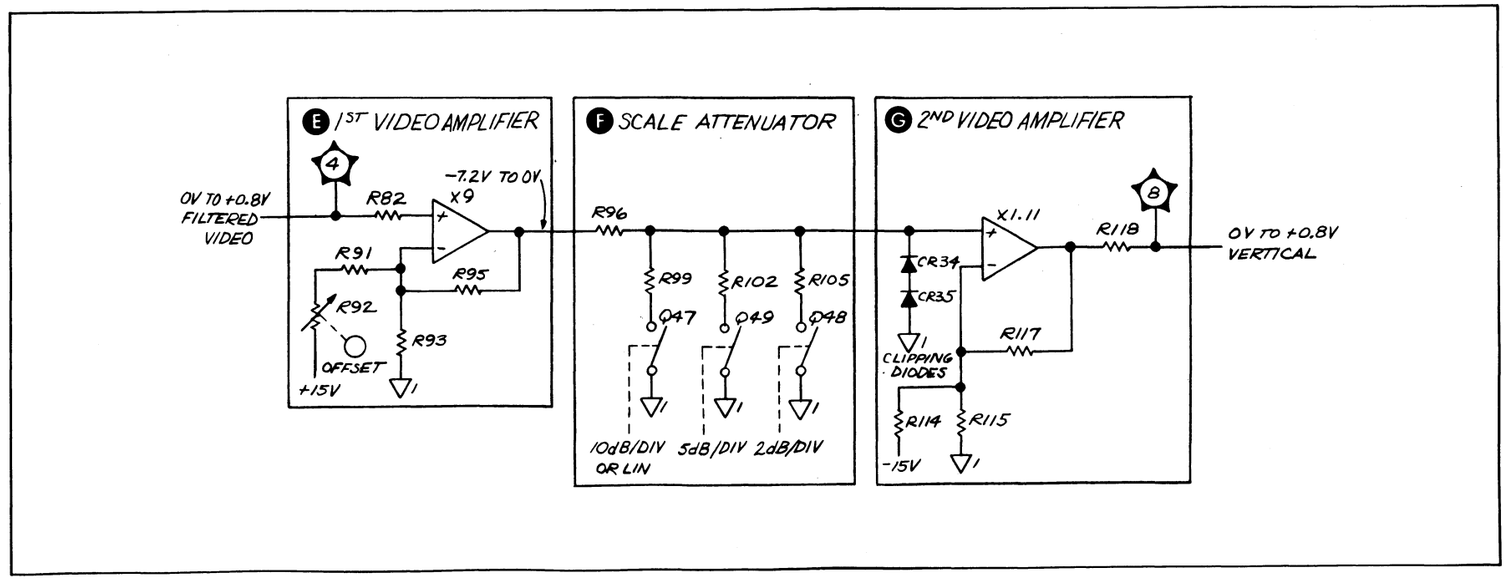

Figure 8-73. Amplitude Scale Control Circuitry

Scans by => ARTEK MEDIA © 2003-2005

Amplifier Assemblyfor the
or Assembly to trigger the
e rear panel for the VER-

n OFF, +15V is routed
and Q6. These transistors
the AST-VF (Auto Sweep
Generator Assembly. The
is the output of the Log
7Ω). In the .3 position, Q14
to route the VIDEO signal
el with R40 on the AST-VF
ns operate in the same way
40 is connected to the AST-

d by +15V routed through
ch when it is in the FULL
node. In the NOISE AVG
on Q37 to route the signal

ed by turning on Q26 and
AST BW-FS (Auto Sweep
to the Sweep Generator
sweep time, is shunted to

Either LC or crystal filtering is selected by routing +15Vthrough through five dc control lines (BWO through BW4) from the front-RESOLUTION BW switch. Each of the lines BW1 through BW4 selects one of the crystal and one of the LC bandwidths. The BW0 line determines whether crystal or LC bandwidth filtering is selected. In the LC mode, a +15V is applied to the base of Q9, which turns on Q15 and turns off Q12, causing BW5 to reach about +14.8V. This enables (in the Bandwidth Filter No. 1 and No. 2 Assemblies) only the LC bandwidths. When BW0 is low, Q9 and Q15 are off and Q12 is on, causing BW5 to go to about −0.5V. This enables only the crystal bandwidths.

Crystal Bandwidth and Video Filter Capacitor Select C

When 3 kHz BW (BW2) is selected, two actions take place. +15V is routed through the RESOLUTION BW switch to the base of Q7 and Q32. These two transistors turn on, turning on Q8 and Q36 and grounding one end of C2, C6, and R72. C2 (the effect of C6 is negligible) forms the capacitive portion of the LC lowpass Video Filter. The current through R72 is applied to the Sweep Generator Assembly for control of the AUTO sweep time. At the same time, BW0 is open, allowing BW5 to go low and turn off the LC section of the Bandwidth Filter No. 1 and No. 2 Assemblies. This also keeps Q38 and Q40 off, enabling the crystal bandwidths to be controlled individually. When Q7 and Q8 turn on, the PIN diode current in BW6 is set by the voltage source Q5 and R55. The 3 kHz BW ADJ R55 adjusts the 3 kHz resolution bandwidth to allow for PIN diode tolerances. When other crystal bandwidths are selected, other transistor pairs are turned on. This changes the PIN diode current in BW6, varies the AUTO sweep current in the AST BW-FS line, and selects the capacitors used in the video filter. In 1 kHz BW, the AUTO sweep time is set by the Sweep Generator Assembly.

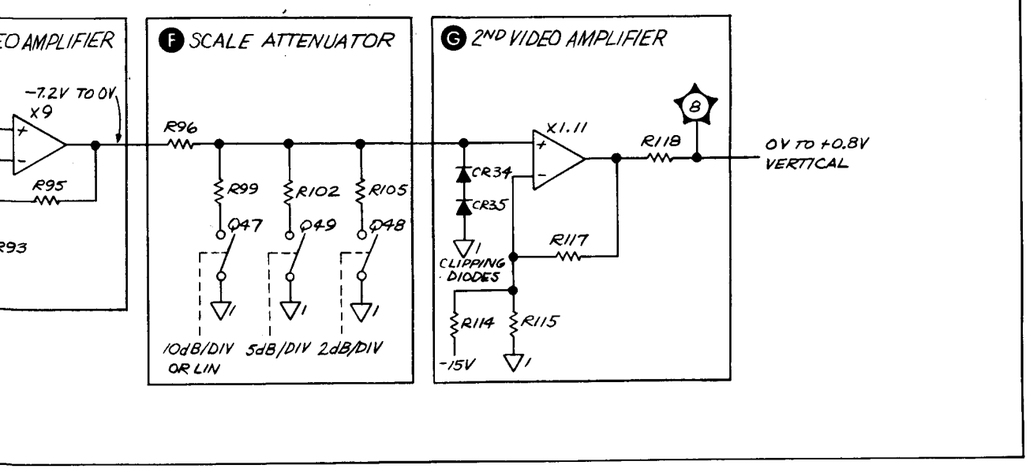

Figure 8-73. Amplitude Scale Control Circuitry

LC Bandwidth and Video Filter Capacitor Select D

When selecting the 300 kHz BW (BW2), +15V is applied to the BW0 line from the RESOLUTION BW switch. This drives the crystal or LC line (BW5) to about +14.8V, which partially disables the crystal section and allows use of the LC bandwidths. Q40 turns on, back-biasing CR14 and leaving the BW7 line free to control the LC bandwidths. Q38 also turns on, bringing BW6 low to turn the crystal bandwidths off and preventing Q2, Q7, Q10, and Q18 from being turned on. With Q2, Q7, Q10, and Q18 off, C1, C2, C3, and C4 cannot effect the video filter. BW0 also turns Q31 on, which changes the AUTO sweep time by adding the weighting resistor R67 to the AST BW-FS line. The +15V from the RESOLUTION BW switch (BW2 line) turns on Q32 and Q36, grounding R71, R72, and C6. The voltage source Q35 and R71 sets the PIN diode current for the 300 kHz BW and allows adjustment for PIN diode tolerances. The current through R72 and R67 fixes the AUTO sweep time, and C6 changes the amount of video filtering.

The selection of other LC bandwidths, with the RESOLUTION BW switch, turns on other transistor pairs. This changes the LC PIN diode curent in BW7, varies the AUTO sweep current in AST BW-FS, and selects the capacitor used in the video filter. The negative voltage from Q33 ensures that none of the transistor pairs for the narrower bandwidths turns on, which keeps the large capacitors C1, C2, C3, and C4 from being connected to ground. C5, C6, C7 and stray capacitance in the 3 MHz BW become the video filter capacitors for the appropriate LC bandwidths. The resistors R71, R74, and R77 control the current for the proper LC bandwidth PIN diodes. In the 100 kHz resolution bandwidth (BW1), the sweep time is correct without switching in additional AUTO sweep control current, and the PIN diode current is preset in the Bandwidth Filter No. 1 and No. 2 Assemblies. The conduction of Q31 adds R67 to the AST BW-FS line to speed up the AUTO sweep time for the wider LC resolution bandwidths.

First Video Amplifier E

The detected and filtered video input (0V to 0.8V) is applied to the gate of Q43A. Q43, Q44, Q45, and Q46 make up a differential amplifier. The gate of Q43A is the non-inverting input and the gate of Q43B, the inverting input. The output at the emitter of Q46 is feedback applied to the gate of Q43B through a voltage divider consisting of R95 and the series-parallel combination of R91, R92, and R93. C16 and L3 change this voltage division at high frequencies to help increase the gain. The voltage gain of the amplifier is 9. +15V is applied to the OFFSET adjustment R92 to offset the input voltage by −0.72V so that the peak of the output signal is 0V. This minimizes any errors in the peak signal voltage that may be introduced by the Scale Attenuator. With an input voltage range of 0V to 0.8V, the signal at the emitter of Q46 will be −7.2V to 0V. Q42 and Q41 are current sources to bias the differential amplifier, and C17 is used to introduce negative feedback at high frequencies to prevent oscillation.

Scale Attenuator F

In 10 dB/DIV or LIN, +15V is routed through the front panel AMPLITUDE SCALE switch to the base of Q47, turning on Q47 and grounding one end of R99. R99 and R96 form a resistor divider which attenuates the output of the First Video Amplifier by about 1/10. This −0.72V to 0V signal is then applied to the input of the Second Video Amplifier.

In 5 dB/DIV, Q49 turns on and grounds R102, which attenuates the video signal by about 1/5. In 2 dB/DIV, R96 and R105 attenuate the signal by approximately 1/2 through Q48, and in 1 dB/DIV the signal is not attenuated at all.

Second Video Amplifier G

The Second Video Amplifier functions in the same way as the First Video Amplifier, with Q50, Q51, Q52, and Q53 making up the differential amplifier. The gate of Q50A is the non-inverting input, and the gate of Q50B is the inverting input. The output of the Scale Attenuator is clipped at about −1.2V by CR34 and CR35 and then applied to the gate of Q50A. The output of the emitter of Q53 is feedback applied to the gate of Q50B through the voltage divider consisting of R117 and the parallel combination of R114 and R115.The voltage gain of the amplifier is 1.11. −15V is applied to R114 to offset the input voltage by +0.72V and compensate for the negative offset in the First Video Amplifier. With an input voltage of −0.72V to 0V, the signal at the emitter of Q53 (and at TP8) would be 0V to 0.8V. Q54 is a current source to bias the differential amplifier, and C11 supplies negative feedback at high frequencies to prevent oscillation. R118, R121, R120, and R119 act to buffer the various outputs.

The FULL BAND frequency marker is generated by a negative voltage applied to R122 and R94 from the Full Multiband Assembly. This forwrd biases CR33, causing the vertical signal to the Y Deflection Amplifier Assembly to dip slightly (about −0.05V) at the tuned frequency.

A21

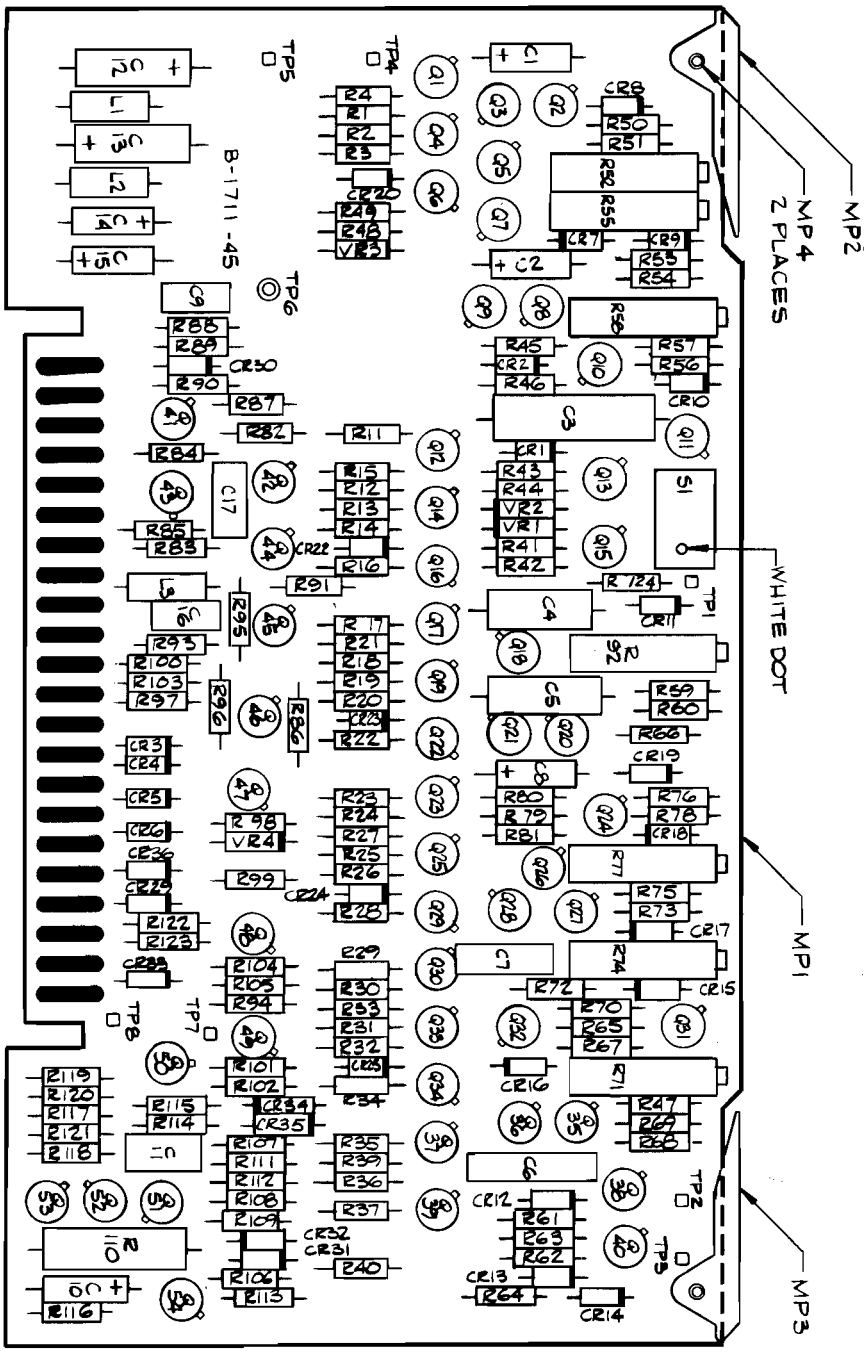

Figure 8-74. A21 Video Assembly, Component Locations

Scans by ARTEK MEDIA =>

Scans by => ARTEK MEDIA © 2003-2005

ARTEK MEDIA
Digitally signed by ARTEK MEDIA
DN: cn=ARTEK MEDIA, c=US, o=DC Henderson
Date: 2005.10.30 09:15:26 -06'00'

A21 VIDEO ASSEMBLY 08565-60024

P1

PIN	SIGNAL	TO/FROM	FUNCTION BLOCK
1 23	VIDEO IN ▽	A22 P1-2	A H
2 24	▽ ▽		H H
3 25	−15V −15V		H H
4 26	▽ ▽		H H
5 27	+15V +15V		H H
6 28	▽1 ▽1		H H
7 29	+30V FMB VF	A2A1J2-24	NOT USED A
8 30	BW10 VIDEO TRIGGER	A2A1J2-2	NOT USED G
9 31	NC 10 dB/DIV	A2A1J2-41	F
10 32	AST-VF 5 dB/DIV	A2A1J1-39	A F
11 33	AST BW-FS 2 dB/DIV	A16P1-35 A2A1J1-37	D F
12 34	MARKER VID FIL OFF	A16P1-37 A1 (904)	G A
13 35	BW Ø NC	A2A1J3-25	C
14 36	BW1 VID FIL .3X	A2A1J3-3 A1 (924)	C A
15 37	BW2 VID FIL .1X	A2A1J3-1 A1 (925)	C A
16 38	BW3 VID FIL .03X	A2A1J3-2 A1 (926)	C A
17 39	BW4 VID FIL .01X	A2A1J3-23 A1 (927)	C A
18 40	BW5 VID FIL .003X	A23P1-30 A27P1-30 A1 (928)	C A
19 41	BW6 NOISE AVG	A23P1-31 A27P1-31 A1 (903)	C D
20 42	BW7 VERTICAL OUTPUT	A23P1-32 A27P1-32 REAR PNL W4	G
21 43	BW8 VERTICAL CLIPPER	A4P1-2	NOT USED G
22 44	BW9 VERTICAL	A6P1-1,16	NOT USED G

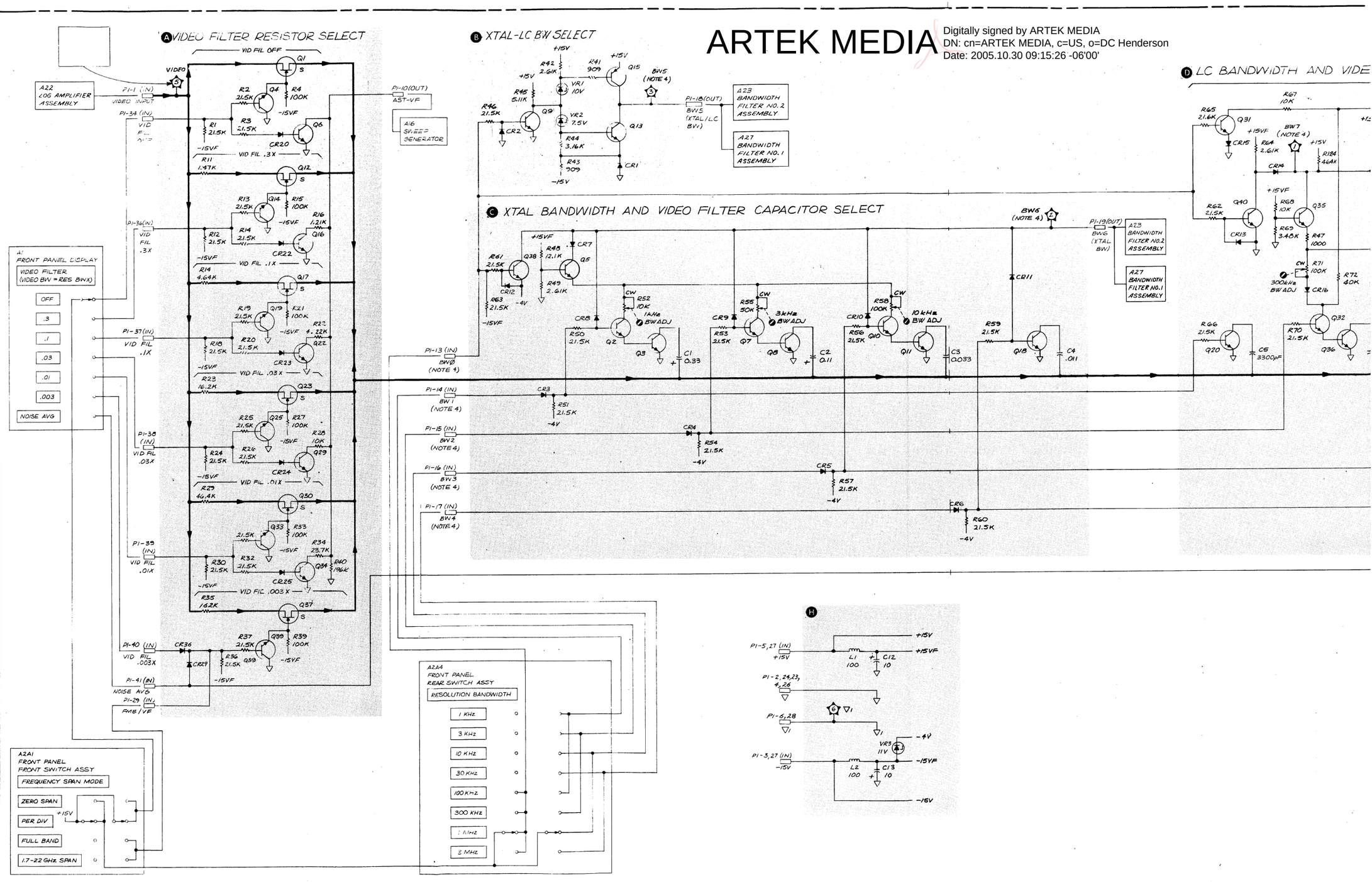

SERIAL PREFIX: 1712A APRIL 15, 1977

Scans by => ARTEK MEDIA © 2003-2005

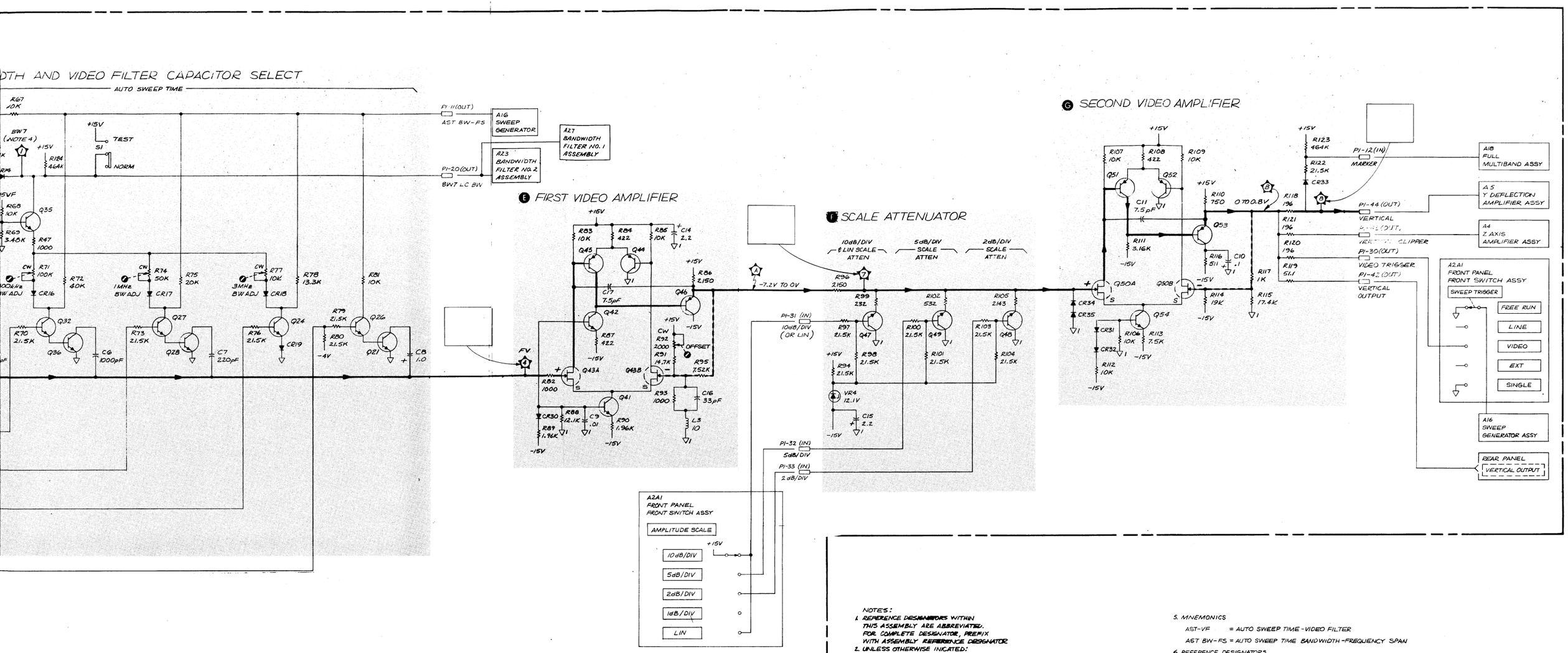

NOTES:

1. REFERENCE DESIGNATORS WITHIN THIS ASSEMBLY ARE ABBREVIATED. FOR COMPLETE DESIGNATOR, PREFIX WITH ASSEMBLY REFERENCE DESIGNATOR
2. UNLESS OTHERWISE INDICATED:
   RESISTANCE IN OHMS (Ω)
   CAPACITANCE IN MICROFARADS (μF)
   INDUCTANCE IN MICROHENRIES (μH)
3. TEST POINT WAVEFORMS ASSUME FOLLOWING SETTING:
   GREEN (NORMAL) SETTINGS
   FREQUENCY SPAN/DIV : 100 MHz
   FREQUENCY BAND : .01-1.8 GHz
   FREQUENCY : 100 MHz
   REFERENCE LEVEL : -10 dBM
   INPUT ATTENUATOR : 0dBM
   INPUT : 100 MHz CAL SIGNAL
4. RESOLUTION BANDWIDTH CONTROL

RESOLUTION BW	MODE	TYPICAL VALUES							
		BW18 VOLTS	BW11 VOLTS	BW12 VOLTS	BW13 VOLTS	BW14 VOLTS	BW15 VOLTS	BW16 VOLTS	BW17 VOLTS
3 MHz	LC	+15	-3	-3	-3	+15	+14.8	-4	+7
1 MHz	LC	+15	-3	-3	+15	-3	+14.8	-4	+8.5
300 KHz	LC	+15	-3	+15	-3	-3	+14.8	-4	+9
100 KHz	LC	+15	+15	-3	-3	-3	+14.8	-4	+13
30 KHz	XLC	-4.6	-3	-3	-3	+15	-.5	+13	+14
10 KHz	XLC	-4.6	-3	-3	+15	-3	-.5	+9	+14
3 KHz	XLC	-4.6	-3	+15	-3	-3	-.5	+8.5	+14
1 KHz	XLC	-4.6	+15	-3	-3	-3	-.5	+7	+14

5. MNEMONICS
   AST-VF = AUTO SWEEP TIME-VIDEO FILTER
   AST BW-FS = AUTO SWEEP TIME BANDWIDTH-FREQUENCY SPAN
6. REFERENCE DESIGNATORS

A21	
LAST USED	NOT USED
C17	
CR36	CR21, CR26, CR27, CR28
L3	
Q54	
R124	R5-R10, R38
VR4	

25
A21

Figure 8-75. A21 Video Assembly, Schematic Diagram

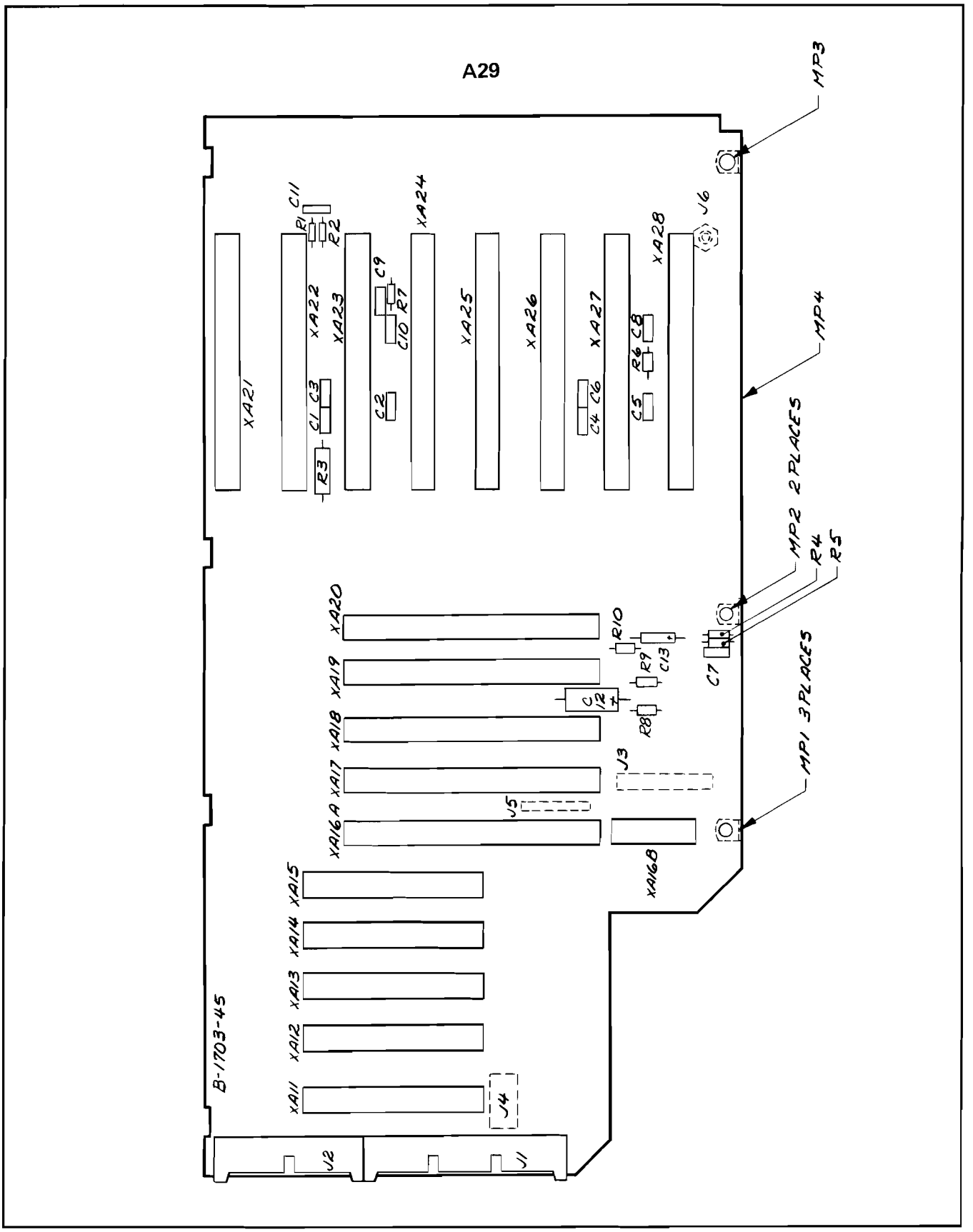

Figure 8-76. A29 RF-IF Motherboard, Component Locations

Scans by ARTEK MEDIA =>

(TO BE SUPPLIED)

26
A29

Figure 8-77. A29 RF-IF Motherboard, Schematic Diagram

Scans by ARTEK MEDIA =>

Scans by => ARTEK MEDIA © 2003-2005

SERVICE SHEET 27
A1 FRONT PANEL DISPLAY ASSEMBLY, CIRCUIT DESCRIPTION

The Front Panel Display Assembly includes A1A1 Bezel Display Assembly and A1A2 Display Switch Assembly.

The Bezel Display Assembly provides information, in the form of LED displays above and below the CRT, about the front-panel control settings of the spectrum analyzer.

The Display Switch Assembly provides the switches and potentiometers affecting the CRT display.

A1A1 Bezel Display Assembly

The Bezel Display Assembly displays all major spectrum analyzer settings as readouts on the CRT bezel. The following information is displayed:

RES BW. Three seven-segment numeric displays and four annunciator LEDs (two individual and two in series) show resolution bandwidth in kHz or MHz.

REF LEVEL. Four numeric displays and two series annunciator LEDs show the net reference level derived from the settings of INPUT ATTEN, REF LEVEL dBm, and reference level FINE.

INPUT ATTEN. Two numeric displays and four series annunciator LEDS show input attenuation as dBm ATTN.

LOG SCALE. Two numeric displays and two series annunciator LEDS show AMPLITUDE SCALE in dB/ when a LOG/DIV pushbutton is depressed. When LIN is depressed, two series annunciator LEDs light LIN in the upper left-hand corner of the bezel.

SWEEP TIME/DIV. Two numeric displays and four annunciator LEDs (two individual and two in series) show the sweep time per division in SEC/, mSEC/, or μSEC/. In AUTO, an A is displayed by lighting all but the "d" segment of one numeric display.

FREQUENCY. Six numeric displays and two series annunciator LEDs show the frequency in GHz that is displayed on the front panel as the FREQUENCY GHz readout.

FREQ SPAN/DIV. Three numeric displays and four annunciator LEDs (two individual and two in series) show the frequency span per division in kHz/or MHz/ when the PER DIV pushbutton is depressed. In 1.7 — 22 GHz SPAN or FULL BAND, or when FREQ SPAN/DIV is set to F, an F is displayed by lighting segments "a," "e," "f," and "g" of one numeric display. In ZERO SPAN, one numeric display shows a zero.

All inputs to the Bezel Display Assembly come from the Readout Driver Assembly. For information about the control of the bezel displays, refer to the circuit description for that assembly.

A1A2 Display Switch Assembly

The Display Switch Assembly includes five pushbutton switches and six potentiometers:

- ☐ ERASE
- ☐ WRITE
- ☐ CONV
- ☐ STORE
- ☐ SCALE
- ○ FOCUS
- ○ PERSIST
- ○ INTENSITY
- ○ STORE INTEN
- ○ SCALE INTEN
- ○ BASELINE CLIPPER

Refer to Section III for a description of the individual controls. References to these controls, as they apply to other assemblies, may be found in the circuit descriptions of A4 Z Axis Amplifier Assembly, A7 Storage Assembly, A8 High Voltage Power Supply Assembly, and A11 DVM Digital Assembly. See Table 8-2 for further information about the control lines related to the various es of operation.

Table 8-2. A1A2 Display Switch Assembly Control Lines

MODE OF OPERATION \ LINE	CONV	MODE	ERASE	SCALE BLANK	FREQUENCY DISPLAY HOLD
WRITE	LOGIC HIGH	LOGIC LOW	LOGIC LOW	LOGIC LOW	LOGIC LOW
CONV	LOGIC LOW	LOGIC HIGH	LOGIC LOW	LOGIC LOW	LOGIC LOW
STORE	LOGIC HIGH	LOGIC HIGH	LOGIC LOW	LOGIC LOW	LOGIC HIGH
SCALE	LOGIC HIGH	LOGIC LOW	LOGIC HIGH	LOGIC HIGH	LOGIC HIGH
ERASE (ENABLED IN WRITE MODE ONLY)	LOGIC HIGH	LOGIC LOW	LOGIC HIGH	LOGIC LOW	LOGIC LOW

The only control line not discussed in connection with other assemblies is FREQ DISPLAY HOLD. When either the STORE or the SCALE pushbutton is depressed, CR2 or CR3 conducts and charges C2. This causes CR4 to conduct and forces the FREQ DISPLAY HOLD line high to prevent updating of the frequency display data. When STORE or SCALE is released, C2 continues to prevent updating for a few hundred milliseconds. During CRT photography, this allows STORE and then SCALE to be depressed without a possible change in the frequency display.

A3 DISPLAY ADJUST ASSEMBLY, CIRCUIT DESCRIPTION

The Display Adjust Assembly includes the front-panel screwdriver adjustments ASTIG, TRACE ALIGN, HORIZ POSN, and VERT POSN.

The ASTIG adjustment A3R1 varies from −15V to +158V the potential on the rectangular astigmatism plate of the CRT, which is shown with A8 High Voltage Power Supply Assembly and A9 High Voltage Oscillator Assembly.

TRACE ALIGN adjustment A3R2 is discussed in the circuit description of A7 Storage Assembly; HORIZ POSN adjustment A3R3, A6 X Deflection Amplifier Assembly; and VERT POSN adjustment A3R4, A5 Y Deflection Amplifier Assembly.

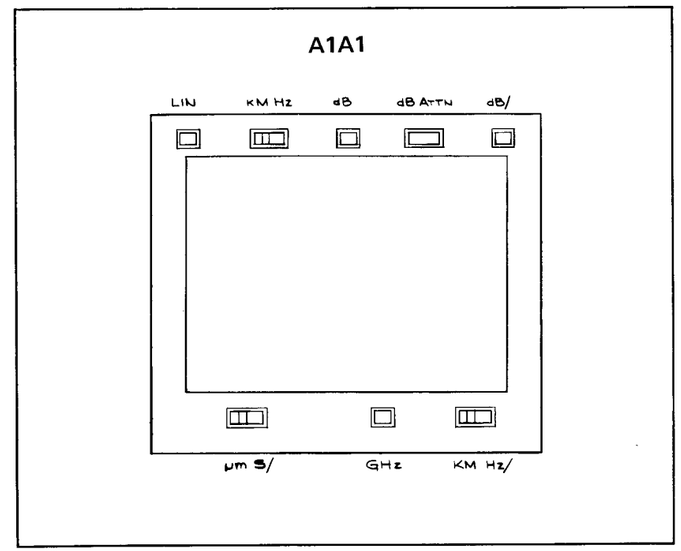

Figure 8-78. A1A1 Bezel Display Assembly, Nomenclature Diagram

Scans by => ARTEK MEDIA © 2003-2005

charges C2. This causes CR4 to conduct and forces the FREQ DISPLAY HOLD line high to prevent updating of the frequency display data. When STORE or SCALE is released, C2 continues to prevent updating for a few hundred milliseconds. During CRT photography, this allows STORE and then SCALE to be depressed without a possible change in the frequency display.

A3 DISPLAY ADJUST ASSEMBLY, CIRCUIT DESCRIPTION

The Display Adjust Assembly includes the front-panel screwdriver adjustments ASTIG, TRACE ALIGN, HORIZ POSN, and VERT POSN.

The ASTIG adjustment A3R1 varies from −15V to +158V the potential on the rectangular astigmatism plate of the CRT, which is shown with A8 High Voltage Power Supply Assembly and A9 High Voltage Oscillator Assembly.

TRACE ALIGN adjustment A3R2 is discussed in the circuit description of A7 Storage Assembly; HORIZ POSN adjustment A3R3, A6 X Deflection Amplifier Assembly; and VERT POSN adjustment A3R4, A5 Y Deflection Amplifier Assembly.

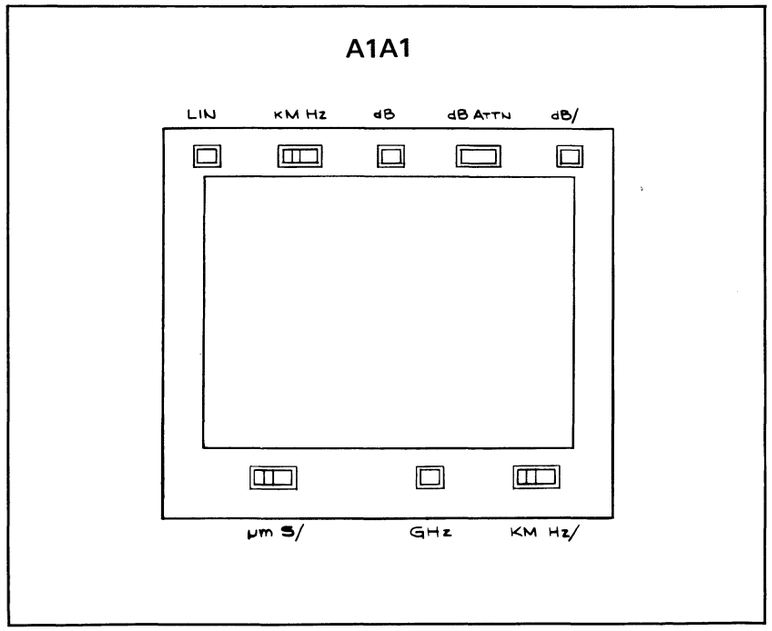

Figure 8-78. A1A1 Bezel Display Assembly, Nomenclature Diagram

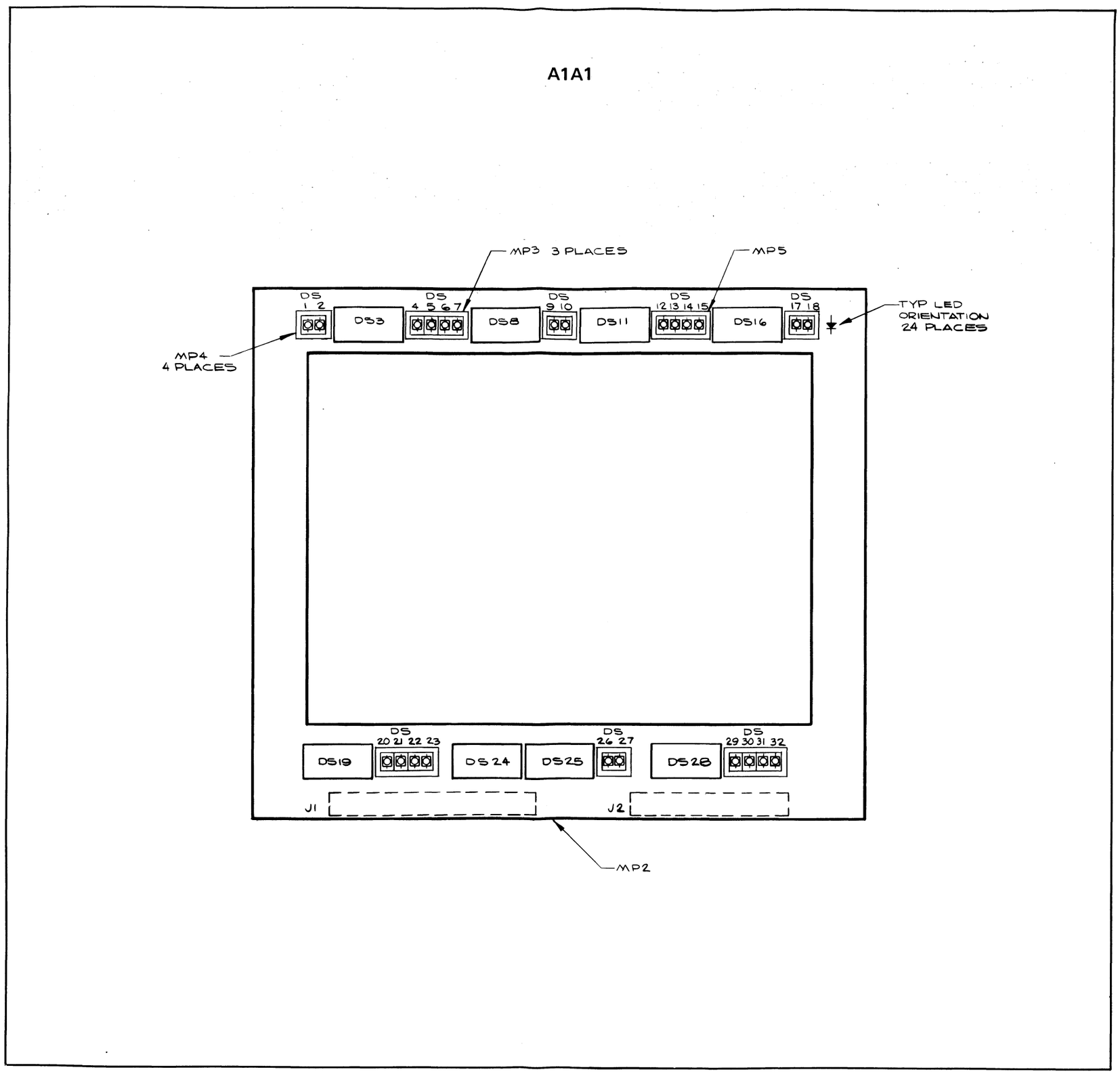

Figure 8-79. A1A1 Bezel Display Assembly, Component Locations

A29 RF-IF Motherboard
SERVICE SHEET 26

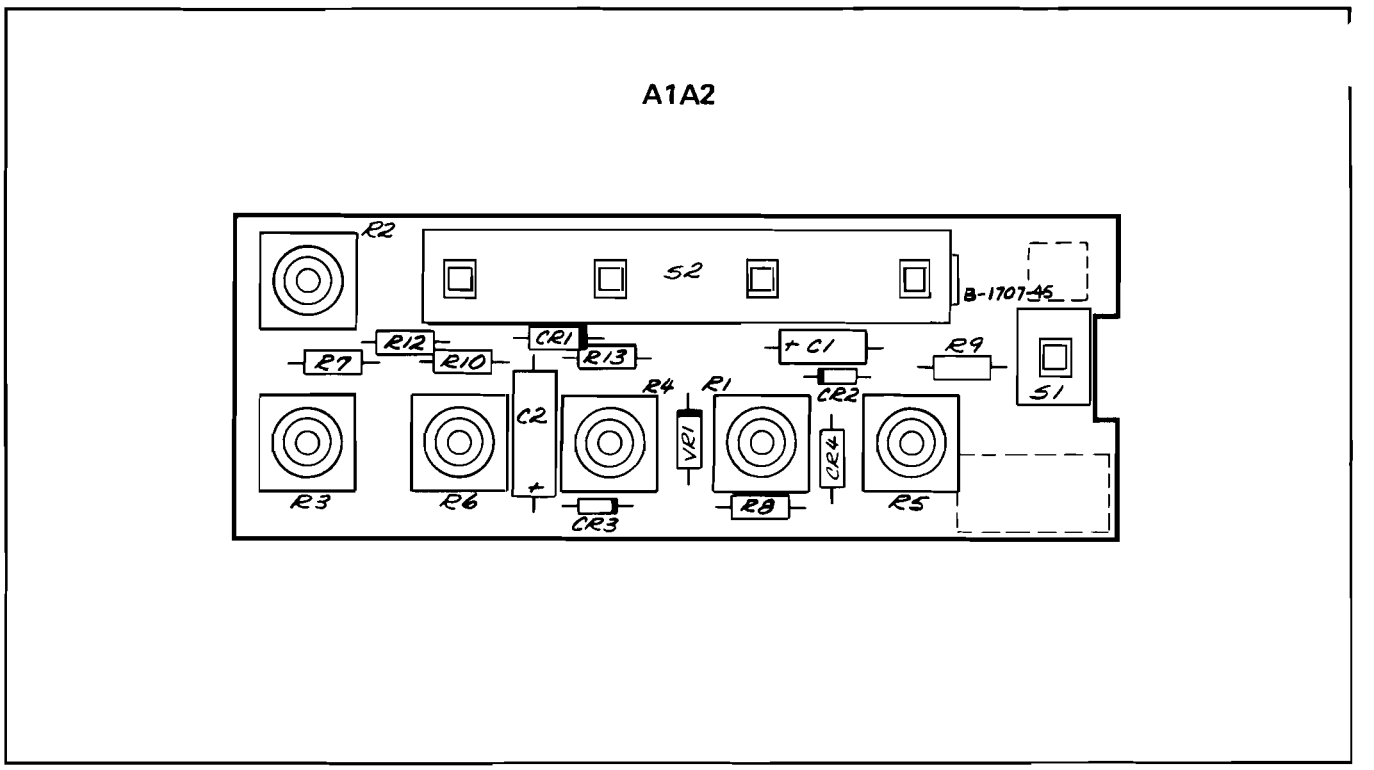

Figure 8-80. A1A2 Display Switch Assembly, Component Locations

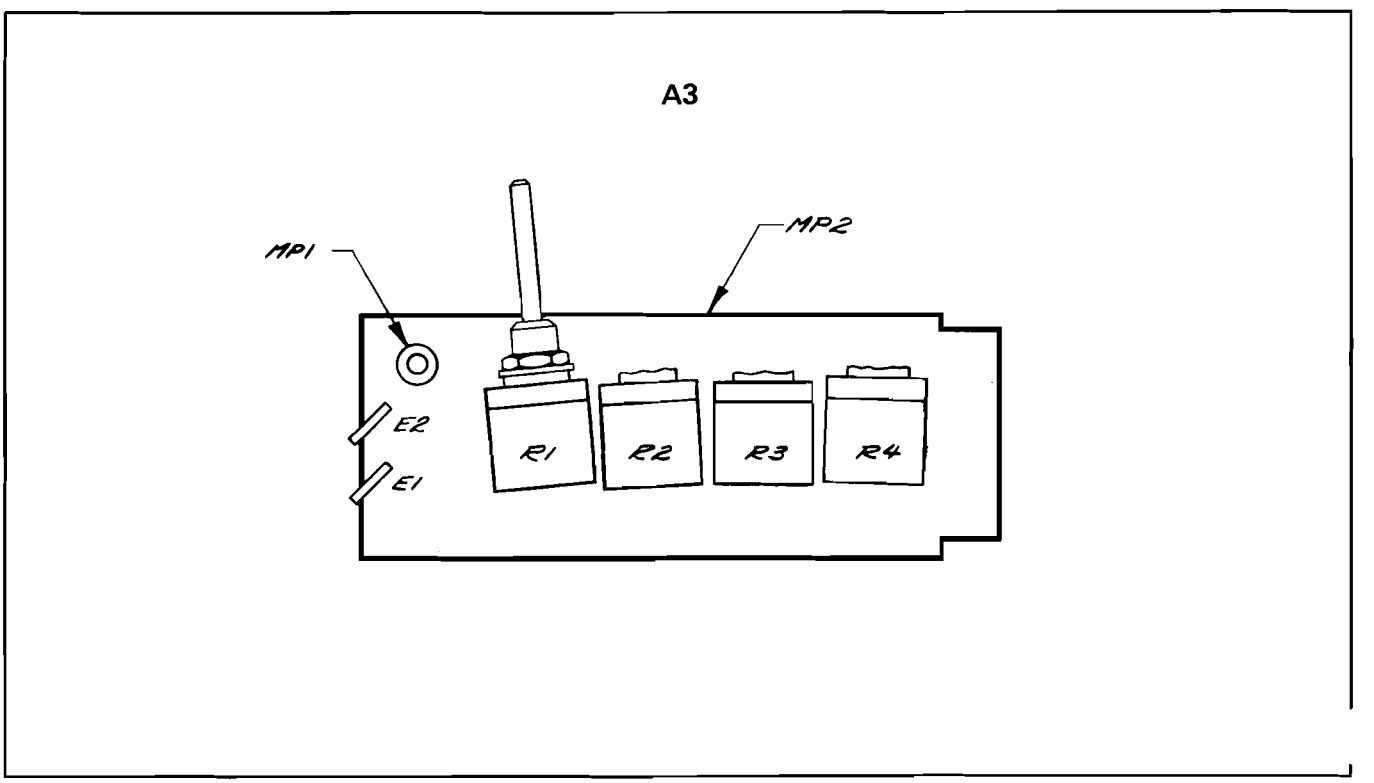

Figure 8-81. A3 Display Adjust Assembly, Component Locations

Scans by ARTEK MEDIA =>

Scans by => ARTEK MEDIA © 2003-2005

A1 DISPLAY FRONT PANEL ASSEMBLY
08565-60049

A1A1J1

PIN	SIGNAL	TO/FROM	FUNCTION BLOCK
1	Hz-dB	A39P3-1	A
2	dB/D	A39P3-2	A
3	LIND	A39P3-3	A
4	GHz-Hz	A39P3-4	A
5	dBATTN	A39P3-5	A
6	FSMD	A39P3-6	A
7	BWKD	A39P3-7	A
8	FSKD	A39P3-8	A
9	BWMD	A39P3-9	A
10	+5V		A
11	STMD	A39P3-11	A
12	STUD	A39P3-12	A
13	SECD	A39P3-13	A
14	NC		
15	CFBa	A39P3-15	A
16	NC		
17	+15V		A
18	CFBb	A39P3-18	A
19	CFBd	A39P3-19	A
20	CFBf	A39P3-20	A
21	CFBg	A39P3-21	A
22	NC		
23	CFBe	A39P3-23	A
24	NC		
25	CFBc	A39P3-25	A
26	NC		
27	CFB6	A39P3-27	A
28	NC		
29	CFdp	A39P3-29	A
30	CFB5	A39P3-30	A
31	CFB3	A39P3-31	A
32	CFB4	A39P3-32	A
33	CFB2	A39P3-33	A
34	CFB1	A39P3-34	A

A1A1J2

PIN	SIGNAL	TO/FROM	FUNCTION BLOCK
1	DIG 11	A39P4-1	A
2	DIG 12	A39P4-2	A
3	BDa	A39P4-3	A
4	NC		
5	DIG 13	A39P4-5	A
6	NC		
7	BDd	A39P4-7	A
8	BDb	A39P4-8	A
9	BDg	A39P4-9	A
10	BDf	A39P4-10	A
11	DIG 15	A39P4-11	A
12	BDe	A39P4-12	A
13	BDc	A39P4-13	A
14	DIG 14	A39P4-14	A
15	DIG 3	A39P4-15	A
16	DIG 10	A39P4-16	A
17	DIG 2	A39P4-17	A
18	DIG 9	A39P4-18	A
19	BDdp	A39P4-19	A
20	DIG 8	A39P4-20	A
21	DIG 4	A39P4-21	A
22	DIG 7	A39P4-22	A
23	DIG 1	A39P4-23	A
24	DIG 6	A39P4-24	A
25	DIG Ø	A39P4-25	A
26	DIG 5	A39P4-26	A

A1A2J1

PIN	SIGNAL	TO/FROM	FUNCTION BLOCK
1	BASELINE CLIPPER	A4P1-25	B
2	-15V		B
3	INTENSITY	A4P1-28, A7P1-20	B
4	PERSIST	A7P1-18	B
5	CONV	A7P1-16	B
6	FREQUENCY DISPLAY HOLD	928	B
7	+15V		B
8	SCALE BLANK	A4P1-23	B
9	NC		
10	NC		
11	NC		
12	NC		
13	ERASE	A7P1-3	B
14	STORE INT	A7P1-19	B
15	MODE	A7P1-2	B
16	▽		B

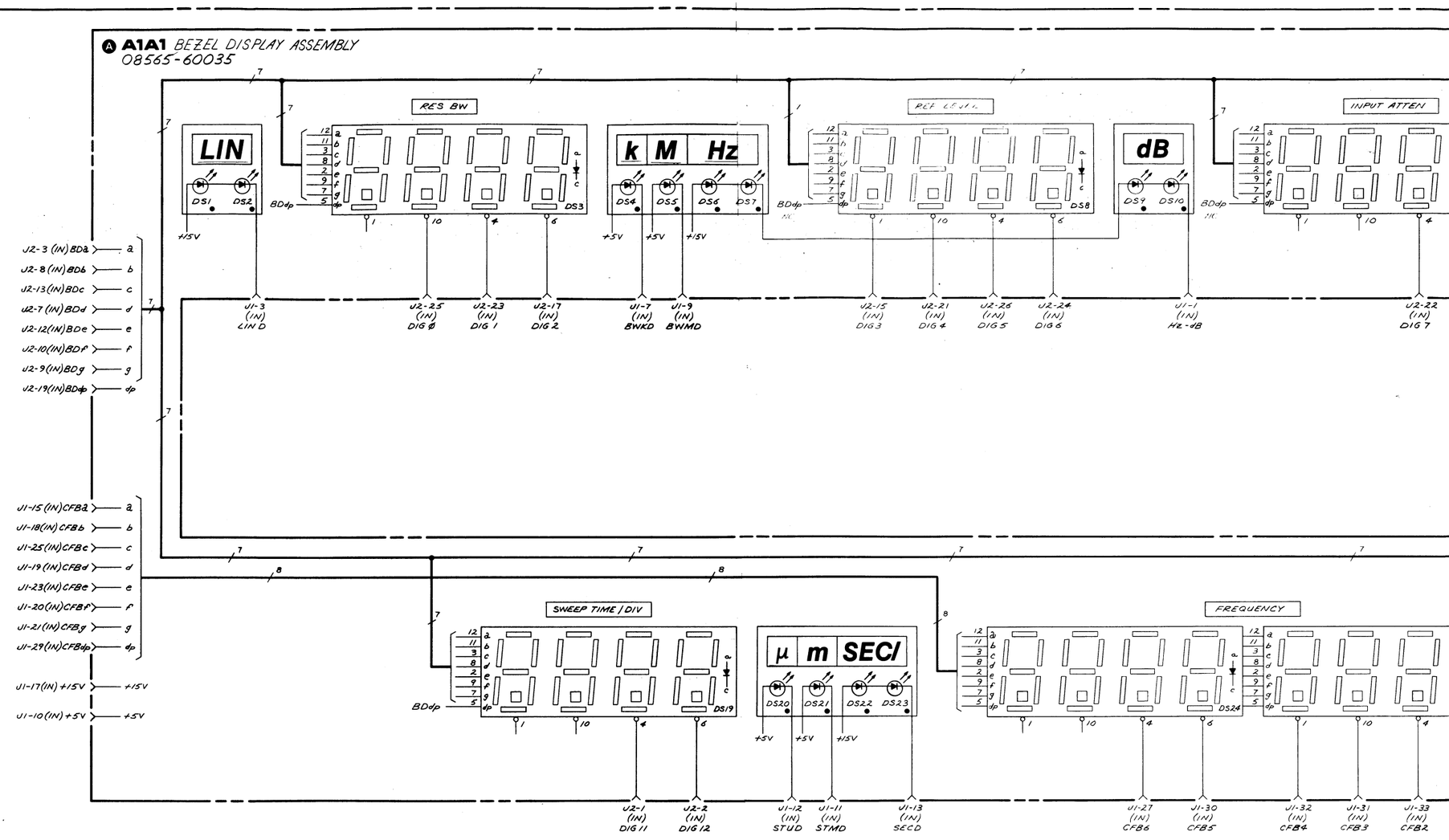

Scans by => ARTEK MEDIA © 2003-2005

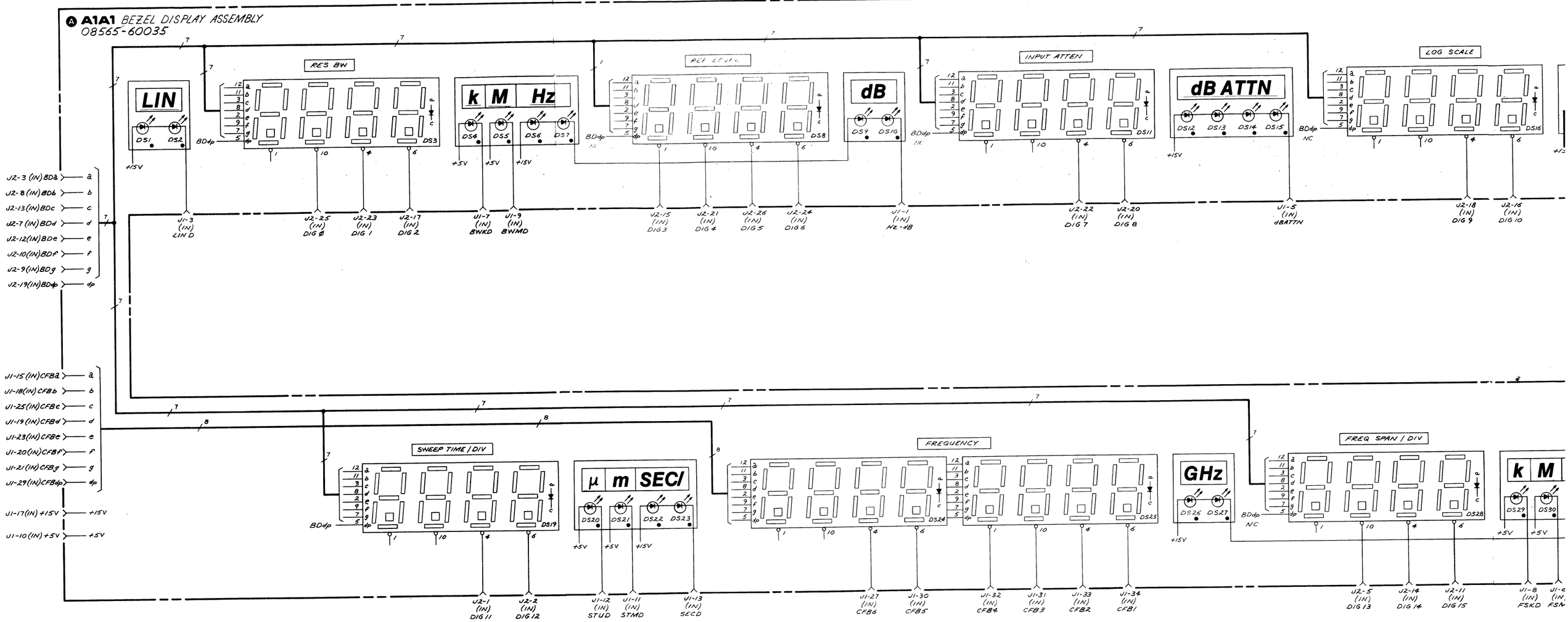

Scans by => ARTEK MEDIA © 2003-2005

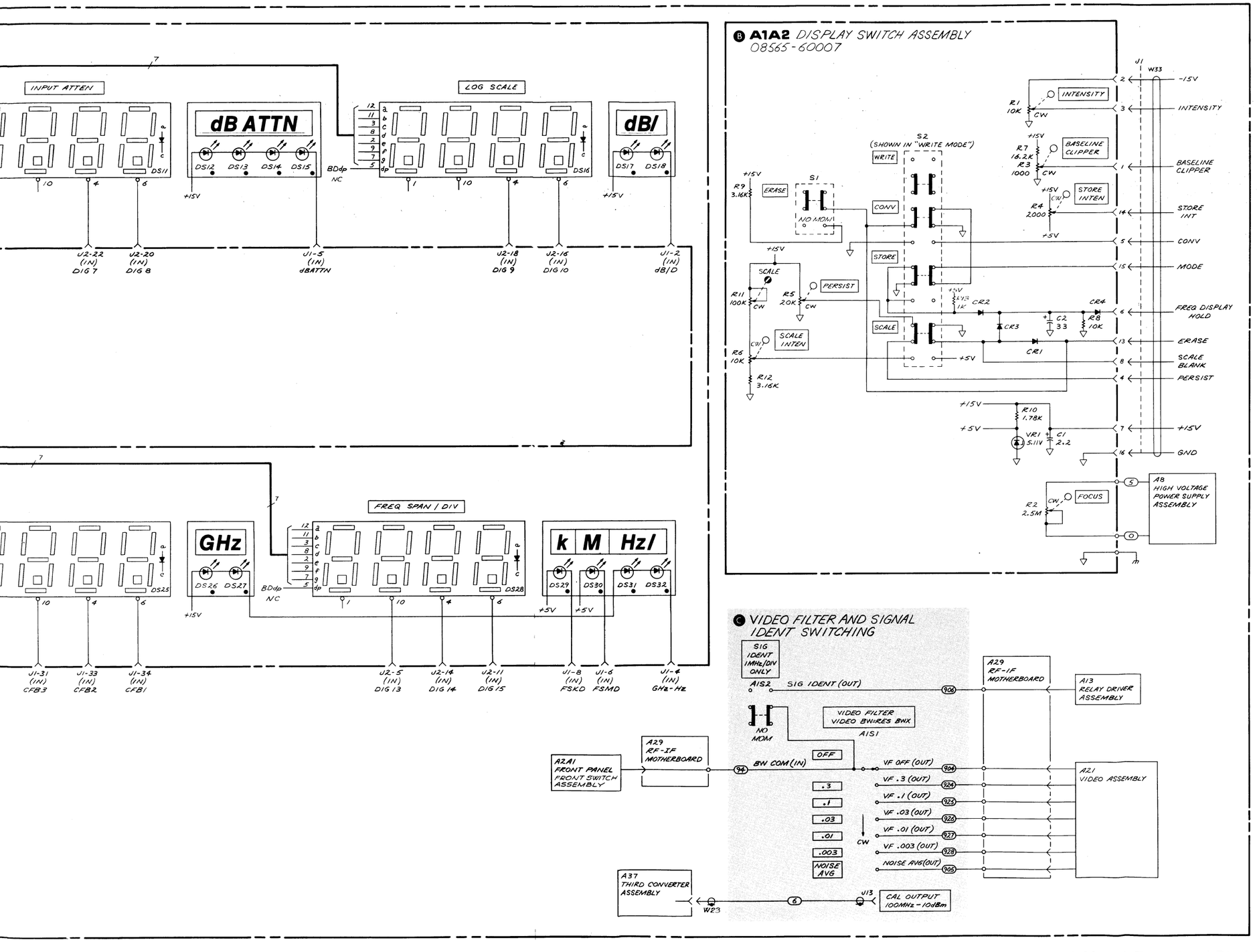

A3 DISPLAY ADJUST ASSEMBLY
08565-60038

P1

PIN	SIGNAL	TO/FROM
1 7	VERTICAL POSITION A NC	A6P1-5
2 8	VERTICAL POSITION B +15BV	A6P1-4
3 9	HORIZONTAL POSITION A NC	A5P1-5
4 10	HORIZONTAL POSITION B ▽	A5P1-4
5 11	+15V NC	
6 12	-15V ASTIG	V1 (9)

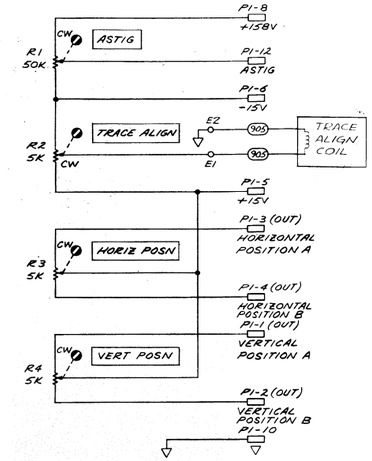

NOTES:

1. REFERENCE DESIGNATORS WITHIN THIS ASSEMBLY ARE ABBREVIATED. FOR COMPLETE DESIGNATOR, PREFIX WITH ASSEMBLY REFERENCE DESIGNATOR.
2. UNLESS OTHERWISE INDICATED:
   RESISTANCE IN OHMS (Ω)
   CAPACITANCE IN MICROFARADS (μF)
   INDUCTANCE IN MICROHENRIES (μH)
3. SEGMENTED DISPLAYS DS3, 8, 11, 16, 19, 24, 25 & 28 ARE CODED AS FOLLOWS:

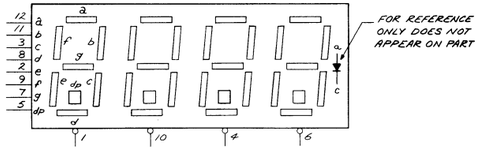

REFERENCE DESIGNATORS:

A1		A1A1		A1A2		A3	
LAST USED	NOT USED	LAST USED	NOT USED	LAST USED	NOT USED	LAST USED	NOT USED
S2		DS32		C2 CR4 R12 S2 VR1		R4	

27
A1, A3

Figure 8-82. A1 Front Panel Display Assembly and A3 Display Adjust Assembly, Schematic Diagram

Scans by => ARTEK MEDIA © 2003-2005

SERVICE SHEET 28
A6 X DEFLECTION AMPLIFIER ASSEMBLY, CIRCUIT DESCRIPTION

The X and Y Deflection Amplifier Assemblies are identical but with different interfaces. Although the same printed-circuit board is used in both assemblies, boards should not be interchanged unless both the display and the Video Assembly are to be recalibrated.

Voltage to Current Input Amplifier (A)

The Voltage to Current Input Amplifier has differential inputs but only one input is used except in the STORE mode of operation, when the BEAM DEFLECT line to the Y Deflection Amplifier goes high. The input which is amplified is selected by the NORMALIZER CONTROL Line. When the normalizer is not connected or is in BYPASS mode of operation, the NORMALIZER CONTROL Line goes to +12V, turning FET Q17 on and FET Q16 off. When the normalizer is operating, it pulls the NORMALIZER CONTROL line to approximately −12V, turning Q17 off and Q16 on.

The nominal input voltage range is from 0V to 1V.

The GAIN adjustment R27 compensates for the different input voltage ranges for the X and Y Deflection Amplifier Assemblies. It also compensates for varying deflection factors for different CRTs. If R27 does not have enough range, the factory-selected resistor R26* may be changed. The HORIZ POSN adjustment on the Display Adjust Assembly controls the relative gain of the inverting and non-inverting sides of the amplifier. As the name implies, the Voltage to Current Input Amplifier has little voltage swing at the output (collectors of Q8 and Q13). It sinks varying amounts of current from Current to Voltage Output Driver Amplifiers "A" and "B," depending on the overall voltage required. However, the output voltage from the Voltage to Current Input Amplifier stays at about 0V. Q8, Q9, and Q10 on one side, and Q13, Q14, and Q15 on the other side, act as common emitter amplifiers, with the last stage (Q8 and Q13) having a voltage gain of zero.

Current to Voltage Output Driver Amplifier "A" (C) and Current to Voltage Output Driver Amplifier "B" (D)

These two amplifiers are identical. Amplifier "A" is driven by the inverting output of the Voltage to Current Input Amplifier, and Amplifier "B" is driven by its non-inverting output. Amplifiers "A" and "B" are both inverting amplifiers. Only Amplifier "A" will be described.

Emitter follower Q7 is ac coupled and helps boost the high-frequency performance of the circuit. It can be ignored unless only the high frequency operation of the asembly is operating improperly.

Assume that the input to Amplifier "A" is open and all the transistors have infinite beta; i.e., their base currents are zero. The base voltage of Q2 is approximately 0.6V,and the base voltage of Q1 is determined by R33 and R35 to be approximately 148V. This sets the collector current of Q1 to about 7 mA. The collector current of Q2 is also about 7 mA because if any of the current is shunted into the base of Q5, the voltage on the emitter of Q5 increases and Q2 is turned on sufficiently to sink 7 mA.

Now assume that the input of Amplifier "A" is connected to the output of the Voltage to Current Input Amplifier. Whatever amount of current is sunk by the input amplifier must be supplied by Q1 through R29. For every milliamp of current sunk by the input amplifier, the output voltage rises 19.6V to keep the input voltage of Amplifier "A" near 0V. The whole assembly has a voltage gain of about 100.

A1 Front Panel Display Assembly
A3 Display Adjust Assembly
◀ SERVICE SHEET 27

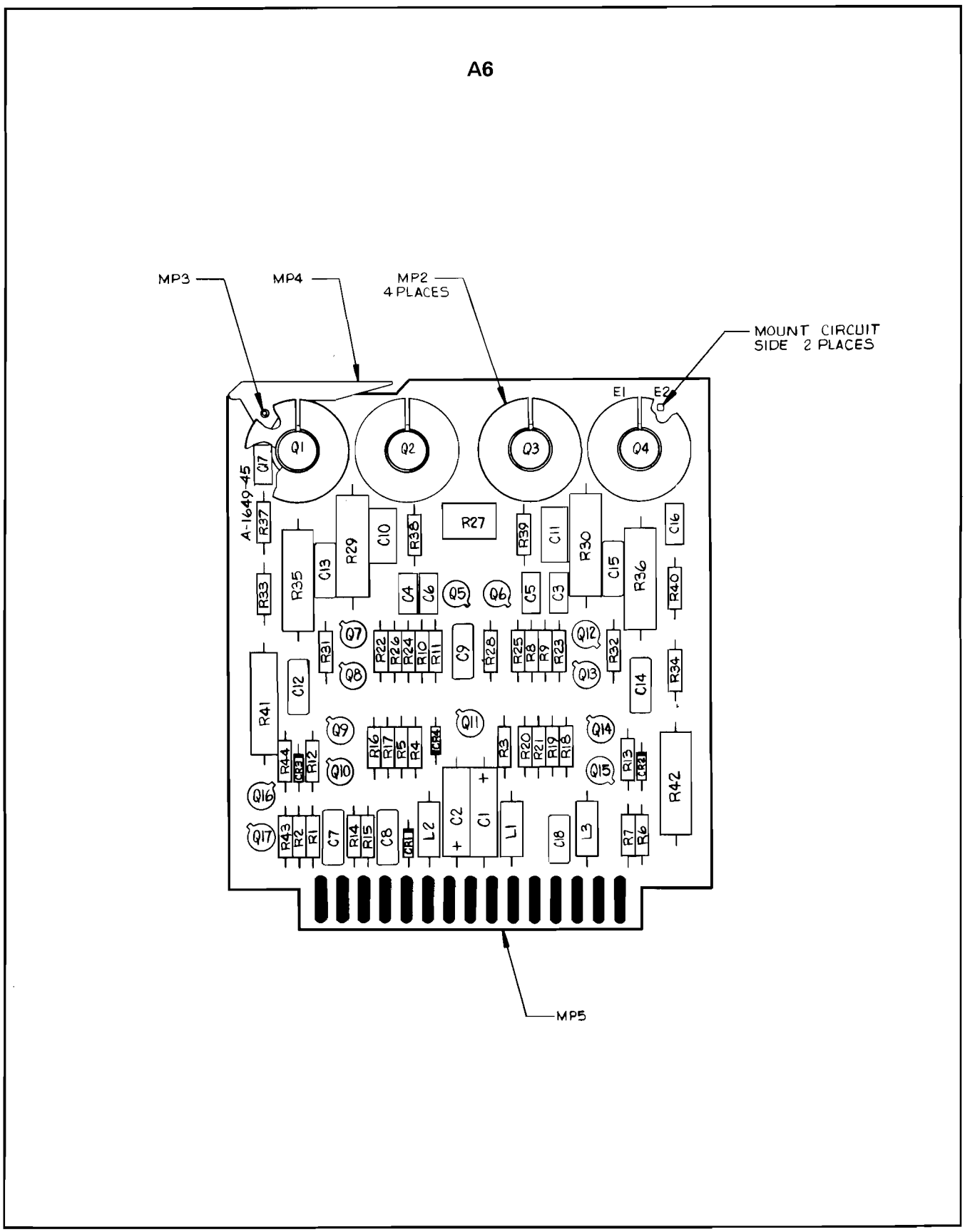

Figure 8-83. A6 X Deflection Amplifier Assembly, Component Locations

Scans by ARTEK MEDIA =>

Scans by => ARTEK MEDIA © 2003-2005

A6 X DEFLECTION AMPLIFIER BOARD
08565-60052

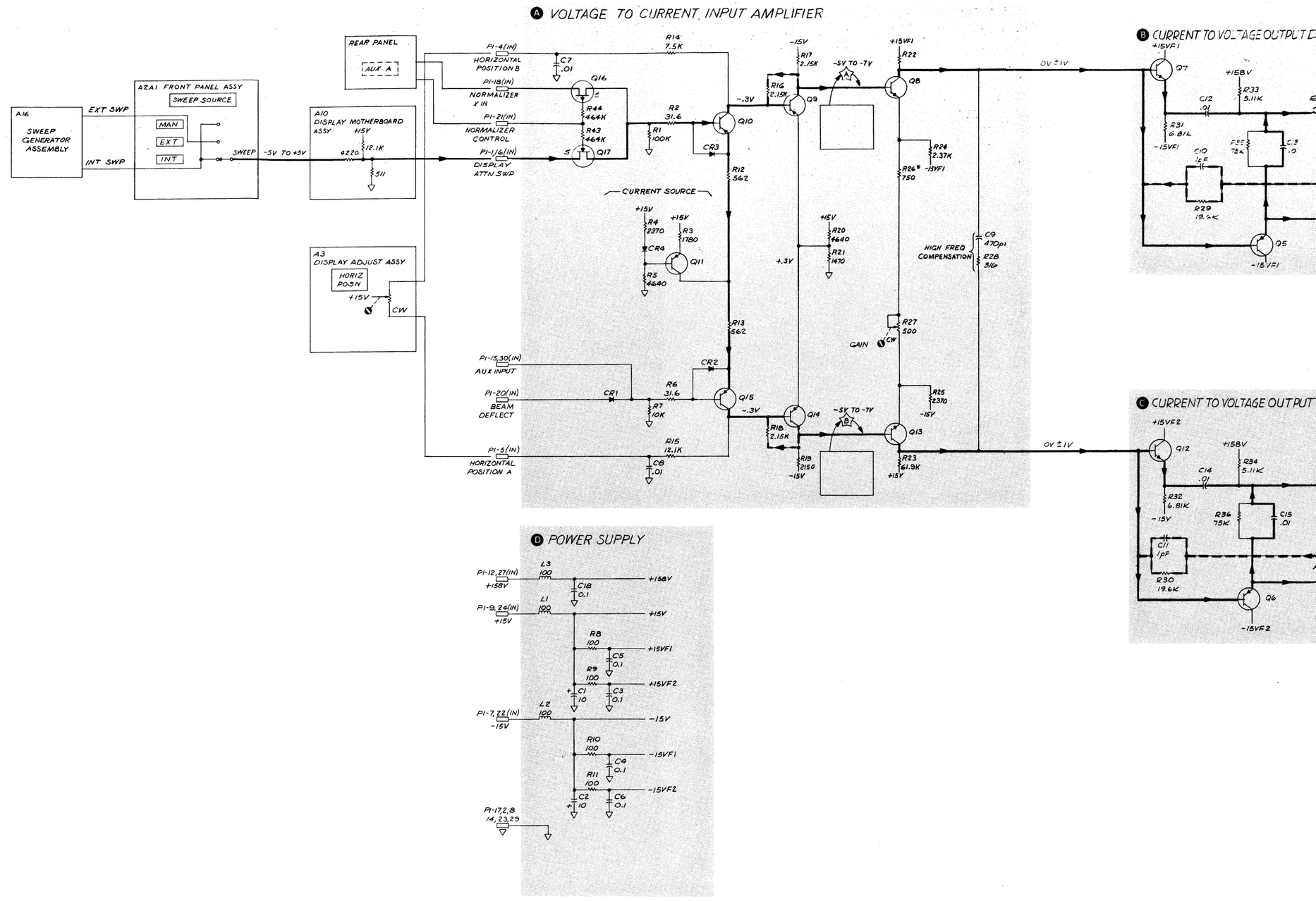

P1

PIN	SIGNAL	TO/FROM	FUNCTION BLOCK
1 16	DISPLAY ATTN SWP DISPLAY ATTN SWP	A2A1J2-29 A2A1J2-29	A A
2 17	▽ ▽		B B
3 18	NC NORMALIZER X IN	REAR PNL J1-4 (926)	A
4 19	HORIZONTAL POSITION B NC	A3P1-4	A
5 20	HORIZONTAL POSITION A BEAM DEFLECT	A3P1-3 NOT USED	A A
6 21	NC NORMALIZER CONTROL IN	REAR PNL J1-12 (925)	A
7 22	-15V -15V		B B
8 23	▽ ▽		B B
9 24	+15V +15V		B B
10 25	NC NC		
11 26	NC NC		
12 27	+158V +158V		B B
13 28	NC NC		
14 29	▽ ▽		B B
15 30	AUX INPUT AUX INPUT	NOT USED NOT USED	A A

SERIAL PREFIX: 1712A APRIL 15, 1977

Scans by => ARTEK MEDIA © 2003-2005

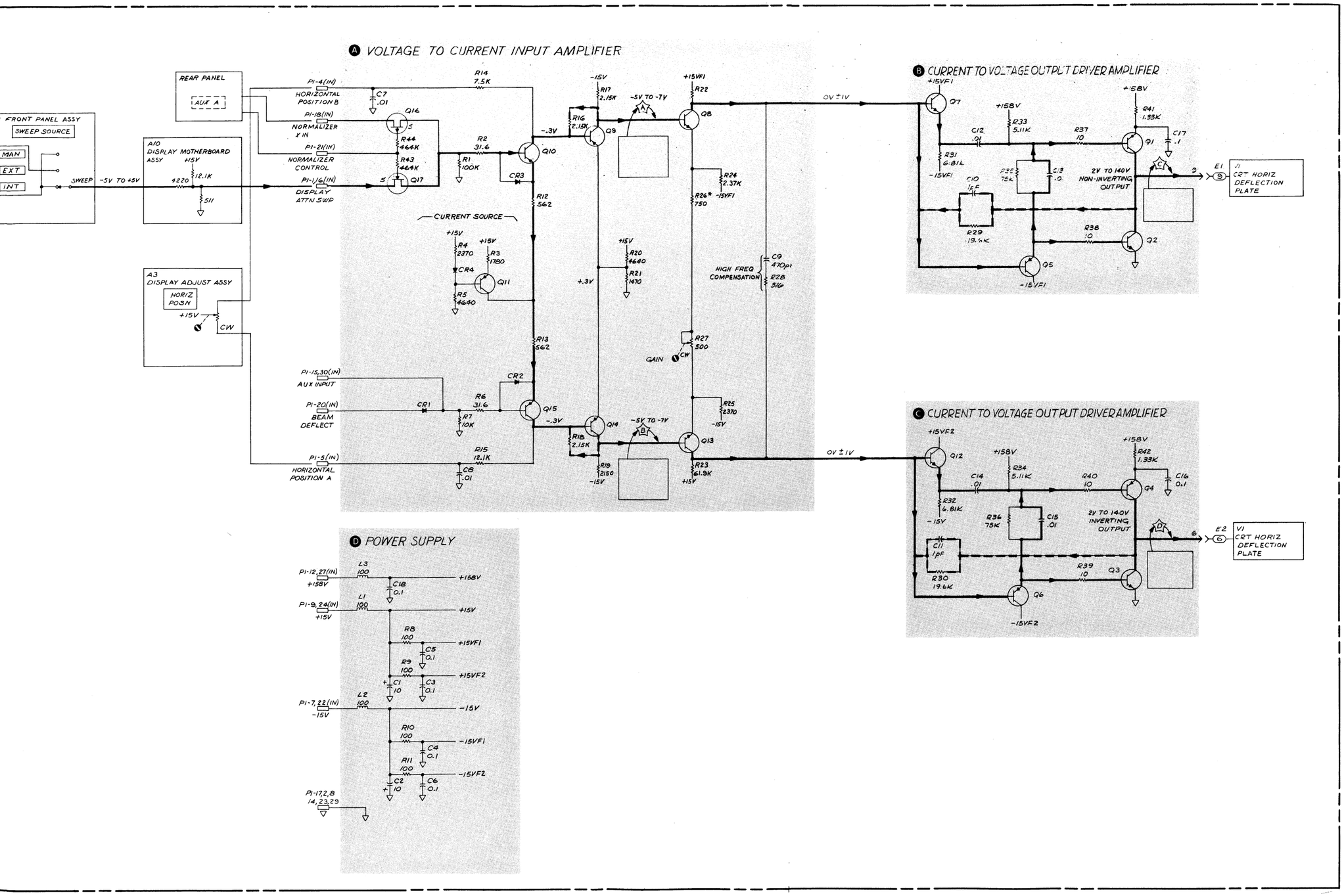

NOTES:

1. REFERENCE DESIGNATORS WITHIN THIS ASSEMBLY ARE ABBREVIATED. PREFIX ABBREVIATION WITH ASSEMBLY NUMBER FOR COMPLETE REFERENCE DESIGNATOR.
2. UNLESS OTHERWISE SPECIFIED:
   ALL RESISTANCE IN OHMS (Ω)
   ALL CAPACITANCE IN MICROFARADS (μF)
   ALL INDUCTANCE IN MICROHENRIES (μH)
3. ASTERISK (*) DENOTES FACTORY SELECTED COMPONENT. NOMINAL VALUE IS SHOWN.
4. SIGNAL LEVELS & TEST POINT WAVEFORMS ASSUME THE FOLLOWING SETTINGS:
   GREEN (NORMAL) SETTINGS
   SWEEP TIME/DIV: 2 mSEC

REFERENCE DESIGNATOR

A6	
LAST USED	NOT USED
R44	
Q17	
C18	
L3	
C24	

28
A6

Figure 8-84. A6 X Deflection Amplifier Assembly, Schematic Diagram

Scans by => ARTEK MEDIA © 2003-2005

SERVICE SHEET 29
A5 Y DEFLECTION AMPLIFIER ASSEMBLY, CIRCUIT DESCRIPTION

The X and Y Deflection Amplifier Assemblies are identical but with different interfaces. Although the same printed-circuit board is used in both assemblies, boards should not be interchanged unless both the display and the Video Assembly are to be recalibrated.

Voltage to Current Input Amplifier A

The Voltage to Current Input Amplifier has differential inputs but only one input is used except in the STORE mode of operation, when the BEAM DEFLECT line to the Y Deflection Amplifier goes high. The input which is amplified is selected by the NORMALIZER CONTROL Line. When the normalizer is not connected or is in BYPASS mode of operation, the NORMALIZER CONTROL Line goes to +12V, turning FET Q17 on and FET Q16 off. When the normalizer is operating, it pulls the NORMALIZER CONTROL line to approximately −12V, turning Q17 off and Q16 on.

The nominal input voltage range is from 0V to 0.8V.

The GAIN adjustment R27 compensates for the different input voltage ranges for the X and Y Deflection Amplifier Assemblies. It also compensates for varying deflection factors for different CRTs. If R27 does not have enough range, the factory-selected resistor R26* may be changed. The VERT POSN adjustment pots on the Display Adjust Assembly controls the relative gain of the inverting and non-inverting sides of the amplifier. As the name implies, the Voltage to Current Input Amplifier has little voltage swing at the output (collectors of Q8 and Q13). It sinks varying amounts of current from Current to Voltage Output Driver Amplifiers "A" and "B," depending on the overall voltage required. However, the output voltage from the Voltage to Current Input Amplifier stays at about 0V. Q8, Q9, and Q10 on one side, and Q13, Q14, and Q15 on the other side, act as common emitter amplifiers, with the last stage (Q8 and Q13) having a voltage gain of zero.

Current to Voltage Output Driver Amplifier "A" C and Current to Voltage Output Driver Amplifier "B" D

These two amplifiers are identical. Amplifier "A" is driven by the inverting output of the Voltage to Current Input Amplifier, and Amplifier "B" is driven by its non-inverting output. Amplifiers "A" and "B" are both inverting amplifiers. Only Amplifier "A" will be described.

Emitter follower Q7 is ac coupled and helps boost the high-frequency performance of the circuit. It can be ignored unless only the high frequency operation of the assembly is operating improperly.

Assume that the input to Amplifier "A" is open and all the transistors have infinite beta; i.e., their base currents are zero. The base voltage of Q2 is approximately 0.6V,and the base voltage of Q1 is determined by R33 and R35 to be approximately 148V. This sets the collector current of Q1 to about 7 mA. The collector current of Q2 is also about 7 mA because if any of the current is shunted into the base of Q5, the voltage on the emitter of Q5 increases and Q2 is turned on sufficiently to sink 7 mA.

Now assume that the input of Amplifier "A" is connected to the output of the Voltage to Current Input Amplifier. Whatever amount of current is sunk by the input amplifier must be supplied by Q1 through R29. For every milliamp of current sunk by the input amplifier, the output voltage rises 19.6V to keep the input voltage of Amplifier "A" near 0V. The whole assembly has a voltage gain of about 100.

A6 X Deflection Amplifier Assembly
SERVICE SHEET 28

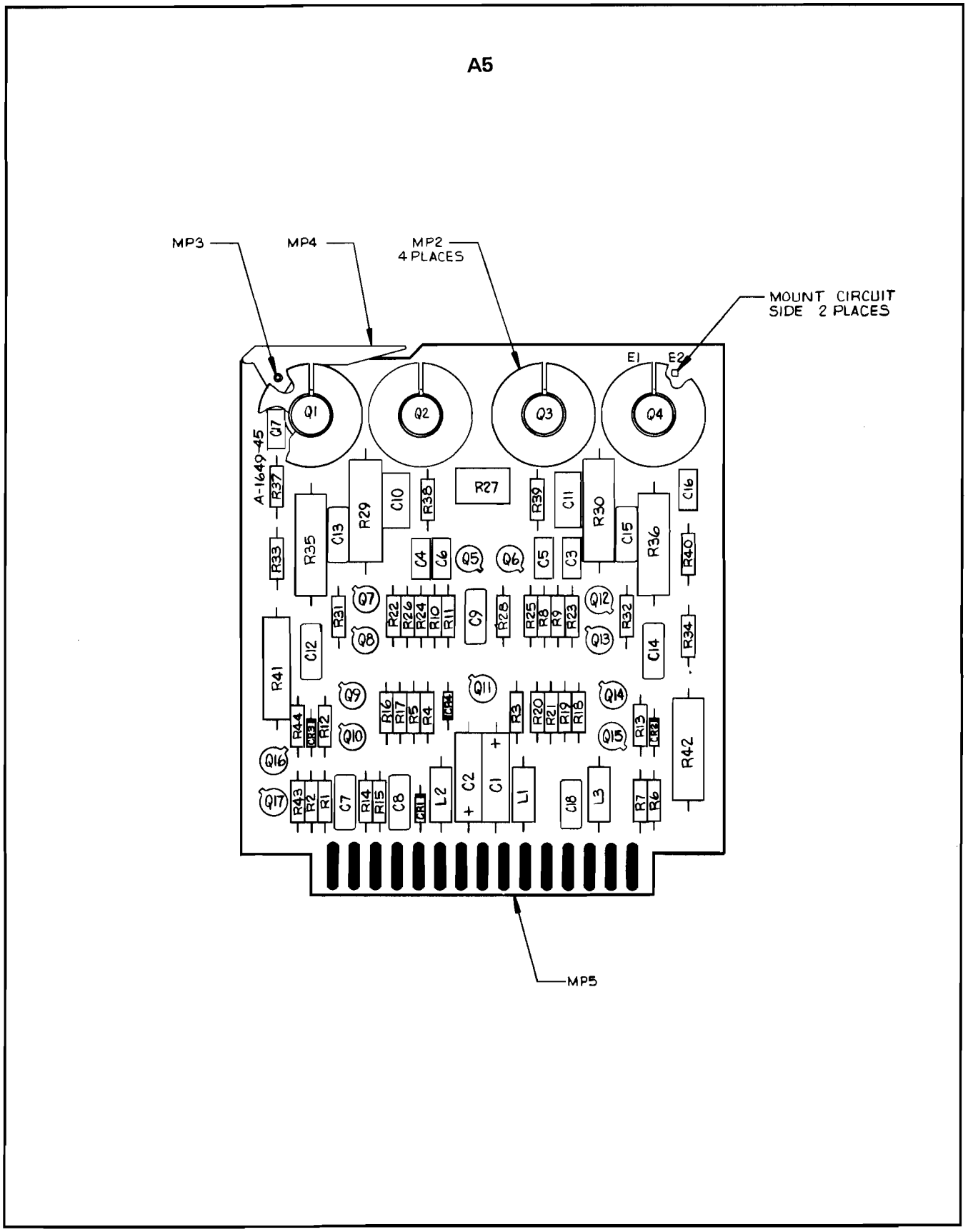

Figure 8-85. A5 Y Deflection Amplifier Assembly, Component Locations

Scans by => ARTEK MEDIA © 2003-2005

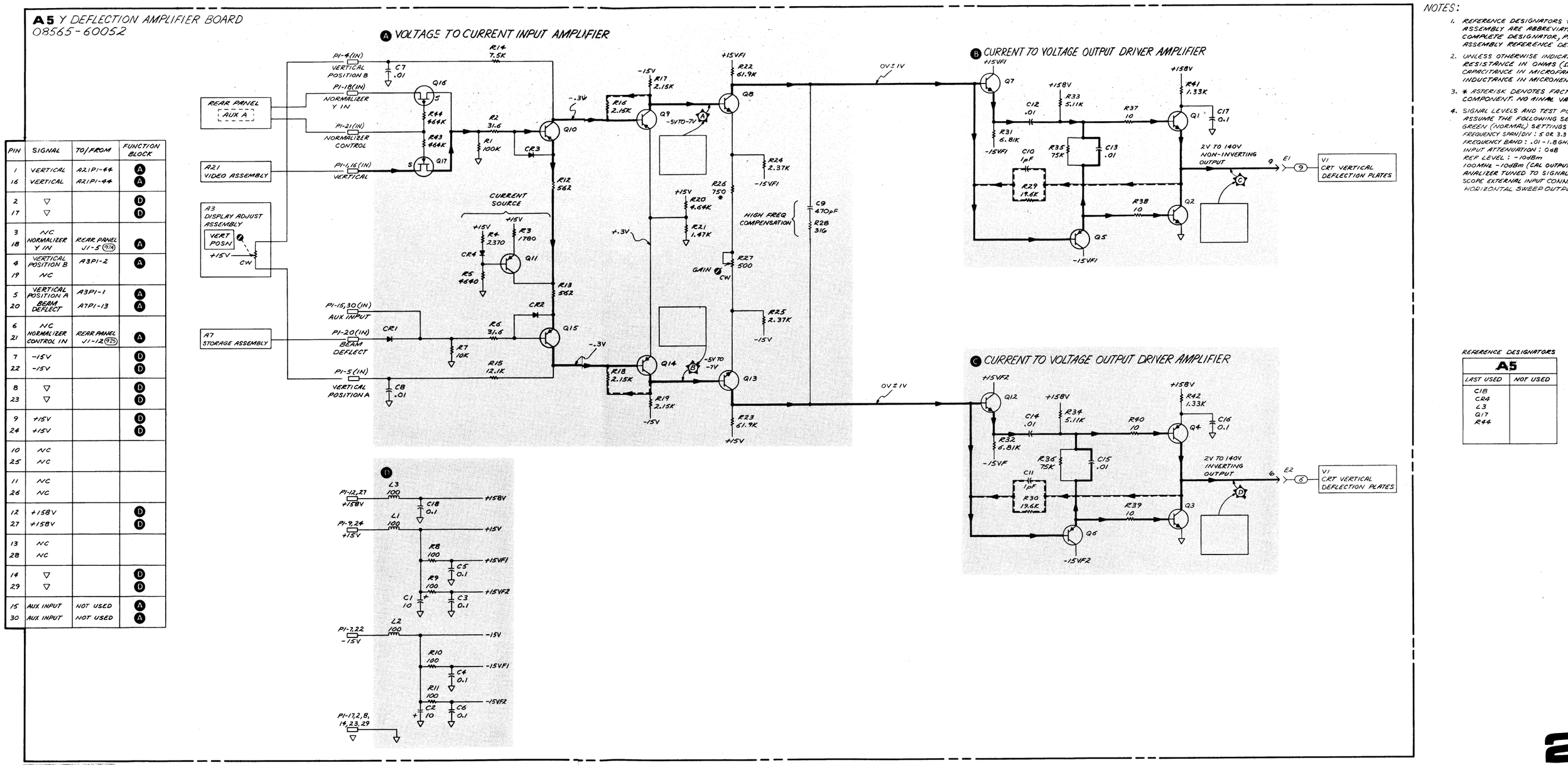

PIN	SIGNAL	TO/FROM	FUNCTION BLOCK
1	VERTICAL	A21P1-44	A
16	VERTICAL	A21P1-44	A
2	▽		D
17	▽		D
3	NC		
18	NORMALIZER Y IN	REAR PANEL J1-5 (9/4)	A
4	VERTICAL POSITION B	A3P1-2	A
19	NC		
5	VERTICAL POSITION A	A3P1-1	A
20	BEAM DEFLECT	A7P1-13	A
6	NC		
21	NORMALIZER CONTROL IN	REAR PANEL J1-12 (9/5)	A
7	-15V		D
22	-15V		D
8	▽		D
23	▽		D
9	+15V		D
24	+15V		D
10	NC		
25	NC		
11	NC		
26	NC		
12	+158V		D
27	+158V		D
13	NC		
28	NC		
14	▽		D
29	▽		D
15	AUX INPUT	NOT USED	A
30	AUX INPUT	NOT USED	A

NOTES:

1. REFERENCE DESIGNATORS WI ASSEMBLY ARE ABBREVIATED COMPLETE DESIGNATOR, PRE ASSEMBLY REFERENCE DESI
2. UNLESS OTHERWISE INDICATE RESISTANCE IN OHMS (Ω) CAPACITANCE IN MICROFARA INDUCTANCE IN MICROHENRI
3. * ASTERISK DENOTES FACTO COMPONENT. NO NOMINAL VALU
4. SIGNAL LEVELS AND TEST POI ASSUME THE FOLLOWING SETT GREEN (NORMAL) SETTINGS FREQUENCY SPAN/DIV : 5 OR 3.3 TI FREQUENCY BAND : .01 - 1.8GHz INPUT ATTENUATION : 0dB REF LEVEL : -10dBm 100MHz -10dBm (CAL OUTPUT) ANALIZER TUNED TO SIGNAL SCOPE EXTERNAL INPUT CONNEC HORIZONTAL SWEEP OUTPUT

REFERENCE DESIGNATORS

A5	
LAST USED	NOT USED
C18	
C84	
L3	
Q17	
R44	

SERIAL PREFIX: 1712A APRIL 15, 1977

2

Figure 8-86. A5 Y Deflection Amplifier Assembly, Schematic D

Scans by => ARTEK MEDIA © 2003-2005

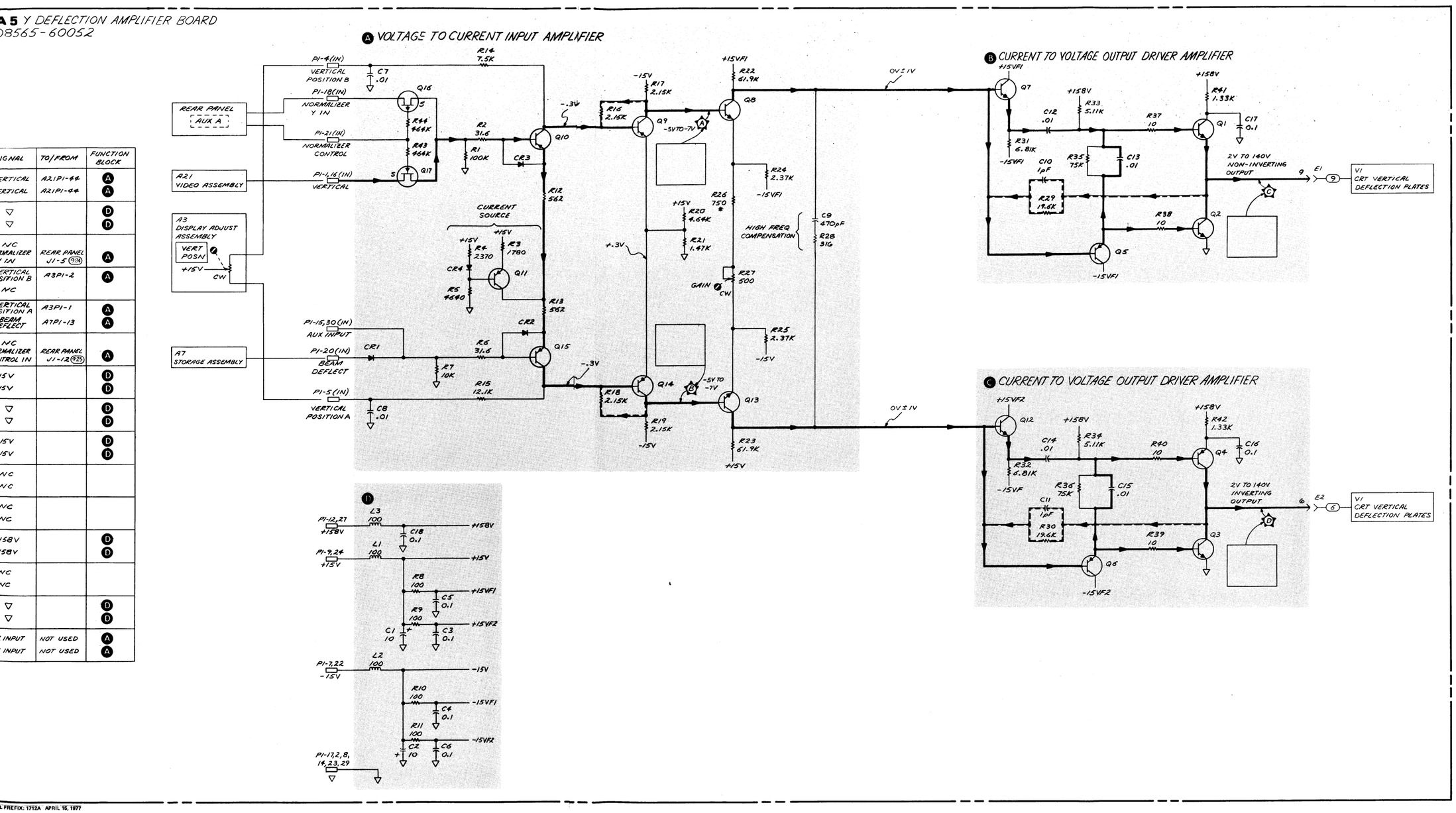

SIGNAL	TO/FROM	FUNCTION BLOCK
VERTICAL	A21P1-44	A
VERTICAL	A21P1-44	A
▽		D
▽		D
NC NORMALIZER Y IN	REAR PANEL J1-5 (9/A)	A
VERTICAL POSITION B NC	A3P1-2	A
VERTICAL POSITION A	A3P1-1	A
BEAM DEFLECT	A7P1-13	A
NC NORMALIZER CONTROL IN	REAR PANEL J1-12 (9/B)	A
15V		D
15V		D
▽		D
▽		D
15V		D
15V		D
NC		
NC		
NC		
NC		
158V		D
158V		D
NC		
NC		
▽		D
▽		D
INPUT	NOT USED	A
INPUT	NOT USED	A

29
A5

Figure 8-86. A5 Y Deflection Amplifier Assembly, Schematic Diagram

SERVICE SHEET 30

A4 Z AXIS AMPLIFIER ASSEMBLY, CIRCUIT DESCRIPTION

The Z Axis Amplifier Assembly performs all CRT blanking functions. It consists of five major circuits: CRT Blanking Logic, Penlift Driver, Vertical Baseline Clipper, Intensity Control, and Z Axis Driver.

CRT Blanking Logic A

The CRT Blanking Logic circuit selects the input that provides the blanking signal to the CRT and the BLANK OUTPUT (PEN LIFT) signal to the rear panel. When the NORMALIZER CONTROL IN input is high (i.e., the 8750A Normalizer is not used) the CRT can be blanked by one of the following inputs: RETRACE BLANK, OVER SWP BLANK, STORE BLANK, SCALE BLANK, or BLANKING INPUT. In normal operation the selected signal is RETRACE BLANK from the Sweep Generator Assembly. The RETRACE BLANK command drives the outputs of U2C low, U2D high, and U1A and U1B high. The high input to the Z Axis Driver blanks the CRT by reverse biasing CR8, preventing current flow from the input of the Z Axis Driver.

One exception to this normal logic flow is the rear-panel BLANKING INPUT signal. This is a blanking signal which is ORed in with the normal logic flow and enables blanking from logic levels supplied to the rear panel. Entering at P1 pin 17, the BLANKING INPUT drives Q3 low. The outputs of U3B, U1D, U1A, and U1B are all driven high. Again, a high output from U1B blanks the CRT.

A Z AXIS BLANK signal from the Storage Assembly or a SCALE BLANK signal from the Display Switch Assembly can supply a blanking signal to the Z Axis Driver through U1C, U1D, U1A, and U1B. These inputs are ORed with the rear-panel BLANKING INPUT signal at U1D.

Another input to the CRT Blanking Logic is the OVER SWP BLANK signal from the Full Multiband Assembly. This signal blanks the CRT whenever the instrument is swept outside its normal frequency limits. OVER SWP BLANK is NORed with RETRACE BLANK at U2C.

When the spectrum analyzer is used with the 8750A Normalizer, the normalizer takes over the blanking functions that would normally be performed by RETRACE BLANK or OVER SWP BLANK. The NORMALIZER CONTROL IN signal is applied to U2A and U2B. An active low input disables RETRACE BLANK and OVER SWP BLANK by driving the output of U2D low. It also enables the NORMALIZER BLANK IN signal by a low input at U2B. The NORMALIZER BLANK IN signal is then inverted by U3A, reinverted by U2B, and then ORed by U1B with a low from U1A (the disabled RETRACE BLANK and OVER SWP BLANK signal) to provide a blanking input to the Z Axis Driver.

A5 Y Deflection Amplifier Assembly
SERVICE SHEET 29

Scans by ARTEK MEDIA =>

Penlift Driver B

The output of U2C goes to the Penlift Driver circuit to drive Q11, which performs both the PEN LIFT and the external blanking functions of the rear panel of the instrument. A low output from U2C gives a "true" PEN LIFT output from Q11.

Vertical Baseline Clipper C

The Vertical Baseline Clipper circuit compares the VERTICAL CLIPPER signal from the Video Assembly with the +0.9V to +15V BASELINE CLIPPER signal from the Display Switch Assembly. In the normal mode, Q9 is biased on and Q8 is turned off. However, when the BASELINE CLIPPER signal is such that it biases Q9 off, the VERTICAL CLIPPER signal controls the switching point of Q8 and Q9. In this case, when the VERTICAL CLIPPER exceeds the BASELINE CLIPPER voltage, Q8 returns to the normal off state, turning Q9 on. The output of this comparator is applied to the Intensity Control switches Q6 and Q7.

Intensity Control D

Under normal operation, in which Q6 is off and Q7 is on, the current from the current source Q10 flows through Q7 out of the input to the Z Axis Driver, forming an unblanking signal. Under these conditions, the amount of current flowing in the collector of Q10 controls the beam intensity of the CRT. This current is adjusted by the INTENSITY signal from the Display Switch Assembly (front-panel INTENSITY control).

When the signal out of the Vertical Baseline Clipper is true, it turns on Q6, turns off Q7, and shunts the current from the collector of Q10 to the +15V supply, blanking the display.

Z Axis Driver E

The Z Axis Driver circuit is a current amplifier used to drive the blanking gate of the High Voltage Power Supply Assembly for the CRT. When current flows out of the input of the Z Axis Driver, it turns on Q4, which then turns on Q1, applying a positive-bias GATE signal to the High Voltage Power Supply Assembly to unblank the CRT. When a BLANKING signal from the CRT Blanking Logic circuit is applied to the input of the Z Axis Driver, Q2 and Q5 turn on, applying a zero-bias GATE signal to the High Voltage Power Supply Assembly, blanking the CRT. The amplifier is stabilized by both ac and dc feedback. R22 supplies the dc feedback and HF ADJUST C8, the high frequency feedback. C8 acts in conjunction with C6 and R18 to set the high frequency response of the amplifier.

Scans by ARTEK MEDIA =>

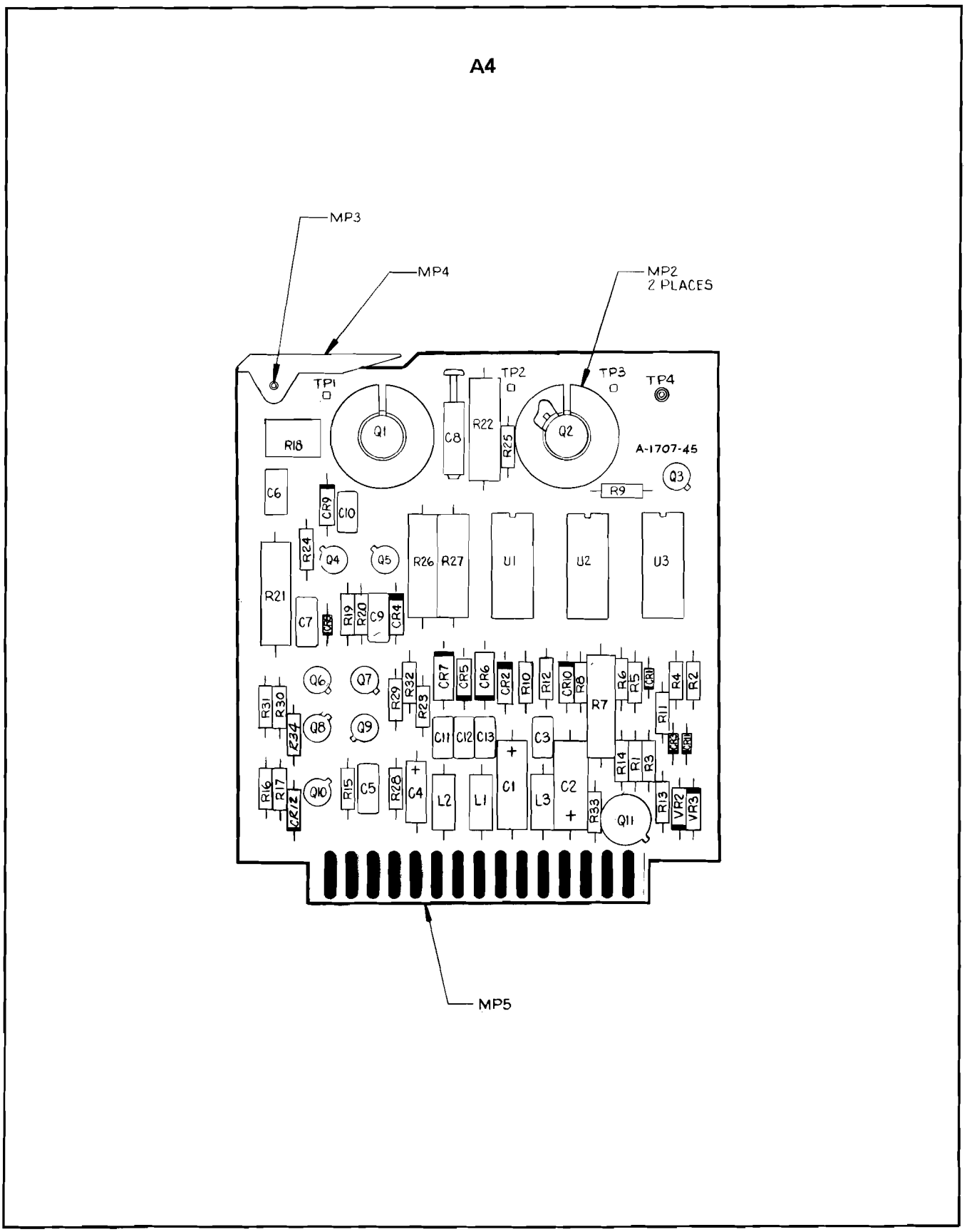

Figure 8-87. Z-Axis Amplifier Assembly, Component Locations

Scans by ARTEK MEDIA =>

Scans by => ARTEK MEDIA © 2003-2005

A4 Z AXIS AMPLIFIER ASSEMBLY
03565-60053

PIN	SIGNAL	TO/FROM	FUNCTION BLOCK
1	▽		F
16	▽		F
2	VERTICAL CLIPPER	A21P1-43	B
17	BLANKING INPUT	REAR PNL J8 (956)	A
3	NC		
18	RETRACE BLANK	A16J1-33	A
4	PEN LIFT	REAR PNL J5 (957)	B
19	+5.2V		F
5	OVER SWP BLANK	A18P1-38	A
20	STORE BLANK	A7P1-15	A
6	GATE	A8P1-10	E
21	GATE	A8P1-20	E
7	-15V		F
22	-15V		F
8	▽		F
23	SCALE BLANK	A1A2P1-8	A
9	+15V		F
24	+15V		F
10	NC		
25	BASELINE CLIPPER	A1A2P1-1	C
11	+158V		F
26	+158V		F
12	NC		
27	NORMALIZER BLANK IN	REAR PNL J1 (926)	A
13	NC		
28	INTENSITY	A1A2P1-3	D
14	NC		
29	NORMALIZER CONTROL IN	REAR PNL J1 (925)	A C
15	▽1		F
30	▽1		F

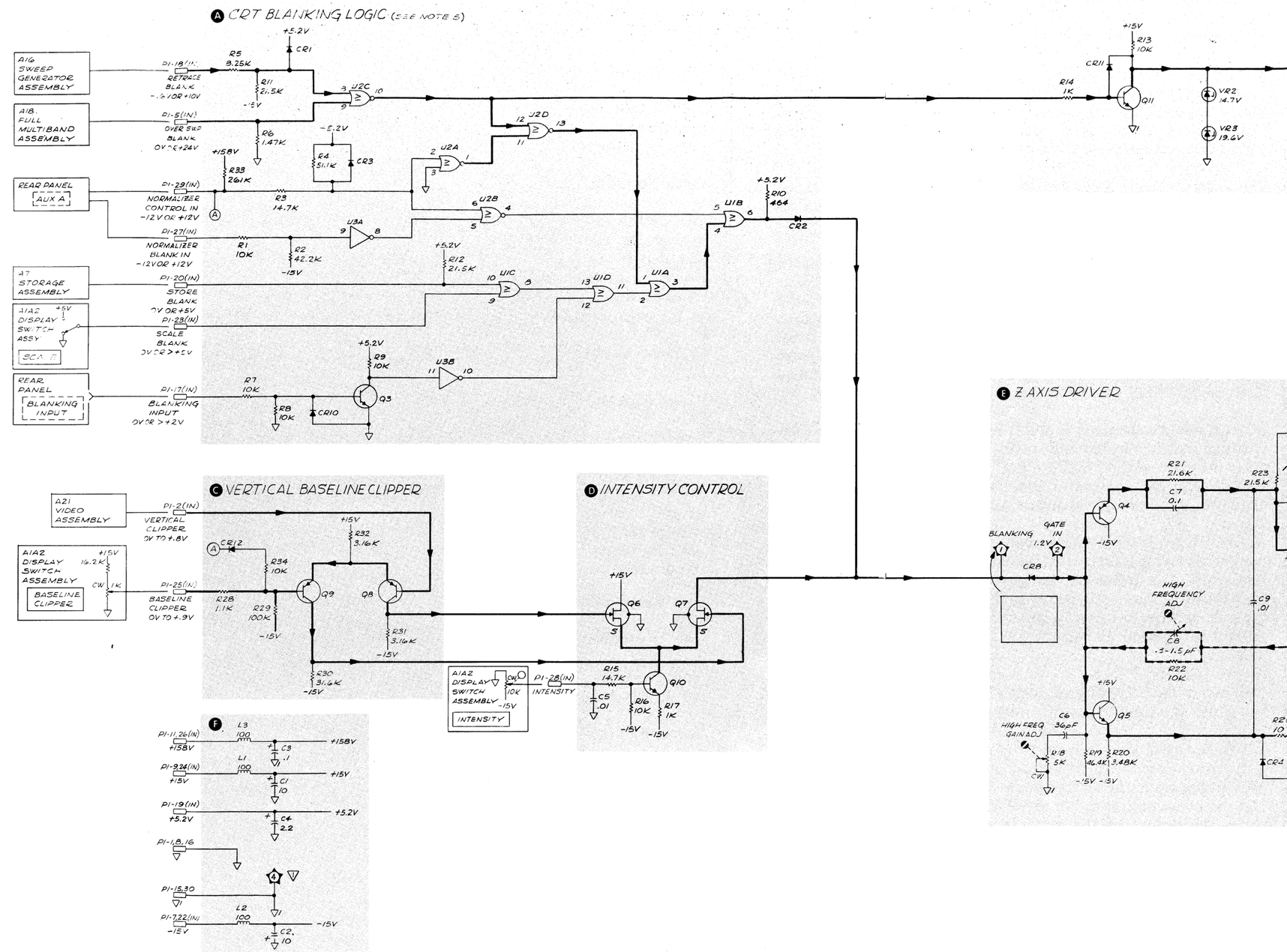

SERIAL PREFIX: 1712A APRIL 15, 1977

Scans by => ARTEK MEDIA © 2003-2005

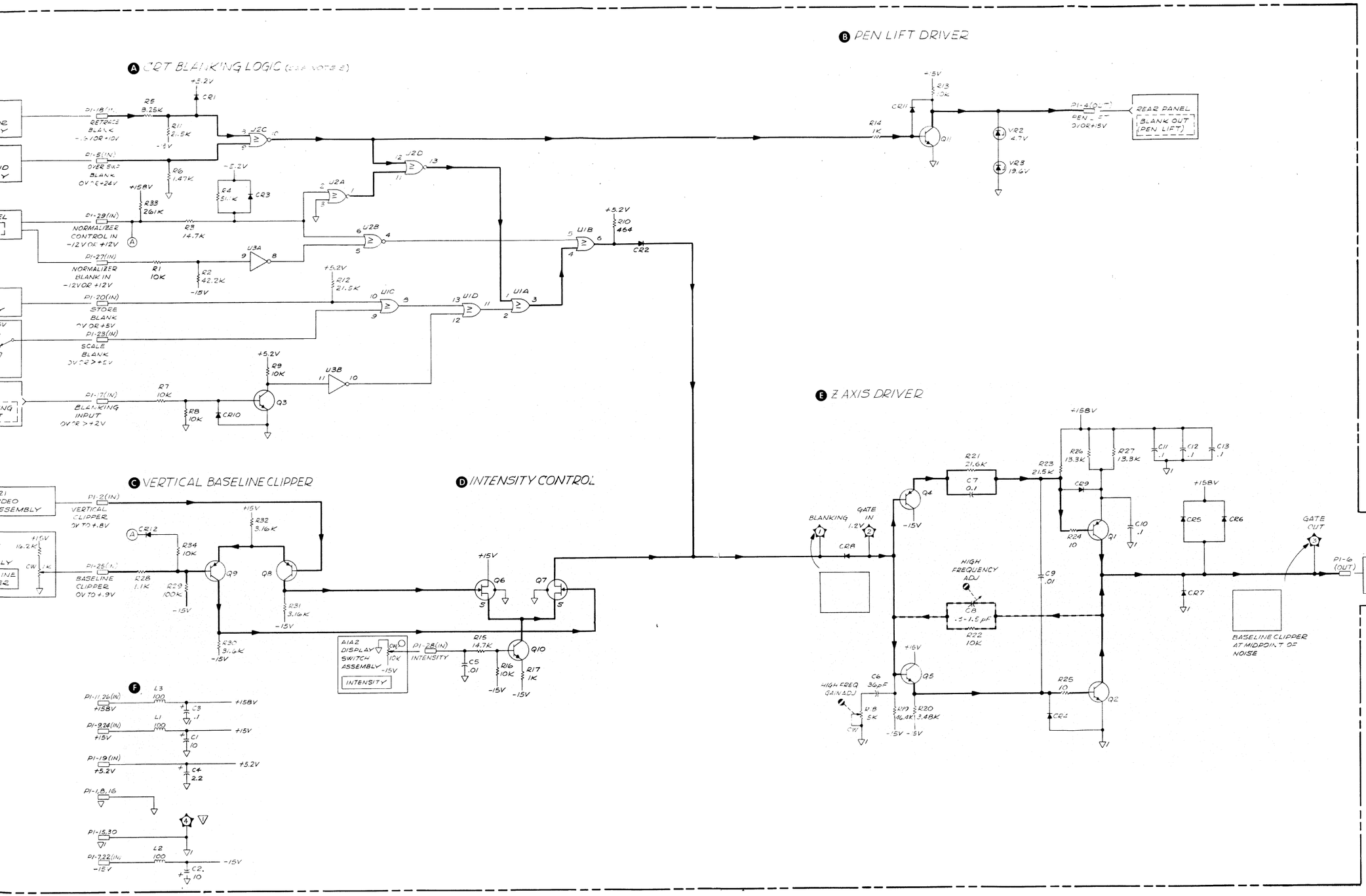

NOTES

1. REFERENCE DESIGNATORS WITHIN THIS ASSEMBLY ARE ABBREVIATED. FOR COMPLETE DESIGNATOR PREFIX WITH ASSEMBLY REFERENCE DESIGNATOR.
2. UNLESS OTHERWISE INDICATED:
   RESISTANCE IN OHM (Ω)
   CAPACITANCE IN MICROFARADS (μF)
   INDUCTANCE IN MICROHENRIES (μH)
3. TEST POINT WAVEFORMS ASSUME THE FOLLOWING SETTINGS:
   GREEN (NORMAL) SETTINGS
   FREQUENCY SPAN/DIV: 100 MHz
   FREQUENCY BAND: .01-1.8 GHz
   FREQUENCY: 100 MHz
   REFERENCE LEVEL: -10dBm
   INPUT ATTEN: 10dBm
4. FOR U1, U2, U3: PIN #7 = ▽; PIN #14 = +5.2V.
5. HIGH INPUT = BLANKED CRT EXCEPT NORMALIZER CONTROL IN.

REFERENCE DESIGNATORS

A4	
LAST USED	NOT USED
C13	
CR212	
L3	
Q11	
R34	
U3	
VR3	

30
A4

Figure 8-88. A4 Z-Axis Amplifier Assembly, Schematic Diagram

Scans by => ARTEK MEDIA © 2003-2005

SERVICE SHEET 31

A7 STORAGE ASSEMBLY, CIRCUIT DESCRIPTION

The Storage Assembly controls the storage portions of the CRT and in addition controls orthogonality and pattern. It also contains circuitry which controls the interaction between the PERSIST and INTENSITY potentiometers.

The CRT contains the conventional electron (writing) gun, deflection plates, post-accelerator, and phosphor screen. In addition, there are two flood guns, a collimator, a collector mesh, and a storage mesh. These added elements make possible the variable persistence and storage functions of the instrument.

The Display Truth Table on the schematic is a useful troubleshooting tool to determine whether a malfunction is in the Storage Assembly or in the CRT.

In WRITE mode the storage circuits must apply: (1) the calibrated collimator voltage, (2) an unblanking voltage to the Z Axis Amplifier Assembly, (3) a dc flood gun accelerator voltage, and (4) variable persistence duty-cycle erase pulses to the storage mesh. The duty cycle of the pulse train is changed by varying the pulse frequency. Pulse frequency is changed by varying the pulse generator input current. Pulse generator input current is supplied from the PERSIST potentiometer.

SCALE mode is the same as WRITE mode except that the display is automatically blanked and erased, and the SCALE INTEN pot takes the place of the PERSIST pot. SCALE mode is used to provide the proper graticule illumination for photographing the display using the double-exposure method.

In STORE mode the storage circuits must apply: (1) the calibrated collimator voltage, (2) a blanking voltage to the Z Axis Amplifier Assembly, (3) a deflection voltage to one side of the Y-amplifier, (4) adjustable duty cycle pulses to the flood gun accelerator, and (5) a dc voltage to the storage mesh. The pulse generator input current is adjusted by varying the current with the STORE INTEN pot.

Depressing the ERASE pushbutton initiates the erase cycle, during which the storage circuits must apply: (1) a modulated 500-millisecond blanking pulse to the Z Axis Amplifier Assemby, (3) a 500-millisecond deflection pulse to one side of the Y-amplifier, (4) a dc flood gun accelerator voltage, and (5) a 500-millisecond complex waveform to the storage mesh. Before and after the erase cycle, the pulse circuits are in the WRITE mode. During the erase cycle, the output of the pulse generator is inhibited, and the waveform to the storage mesh is controlled by the output of the erase cycle timing switch.

Display Function Decoding Logic (A)

The Display Function Decoding Logic circuit monitors the three logic control lines from the Display Switch Assembly and controls the other circuits on the Storage Assembly. (The Display Truth Table describes these logic control lines.) This circuit also selects the current that controls the duty cycle of the Persistence Pulse Generator. Either the SCALE INTENSITY line or the PERSISTENCE line from the Display Switch Assembly is selected, or they are both disabled, depending on which display mode is selected.

Intensity Vs Persistence Control (B)

This circuit monitors the PERSISTENCE control line and modulates the INTENSITY line to prevent the display from dimming when the persistence is decreased.

Orthogonality Adjust (C)

The ORTHOG adjustment R71 controls the amount of current through the orthogonality coil. The coil is placed in such a position that it affects horizontally deflected electrons more than it affects vertically deflected electrons. This assures that the horizontal deflection plates operate on the electron beam perpendicular to the angle at which the vertical deflection plates operate. The trace align coil operates equally on both vertically and horizontally deflected electrons. The TRACE ALIGN adjustment is in the Display Adjust Assembly.

Flood Gun Heater Interlock (D)

The Flood Gun Heater Interlock drops the −15V to approximately −12.6V to be used for the flood gun filament. It also disables the flood guns if the Storage Assembly is removed. Note that the +158V to the High Voltage Oscillator Assembly is also interlocked and disables the writing gun filament voltage and the high voltage for the CRT if the Storage Assembly is removed, but do not relay on this feature. Turn the instrument off before removing this or other assemblies.

Persistence Pulse Generator (E)

The Persistence Pulse Generator is a variable duty cycle, a stable multivibrator. The fixed pulse width is set by R5 and C6. The pulse repetition frequency is set by the current through Q2. (See the Display Truth Table.)

Storage Pulse Generator (F)

The Storage Pulse Generator is an astable multivibrator. The pulse width and pulse repetition frequency are set by R34, R35, and C13. (See the Display Truth Table.)

CRT Blanking (G)

The CRT Blanking circuit blanks the CRT in STORE mode and for the duration of the erase cycle. The BEAM DEFLECT line simultaneously goes high to saturate the Y Deflection Amplifier at its negative limit. This will prevent any electrons that may still escape from the writing gun from reaching the storage mesh, which would degrade store time.

Scans by => ARTEK MEDIA © 2003-2005

Table describes these logic control lines.) This circuit also selects the current that controls the duty cycle of the Persistence Pulse Generator. Either the SCALE INTENSITY line or the PERSISTENCE line from the Display Switch Assembly is selected, or they are both disabled, depending on which display mode is selected.

Intensity Vs Persistence Control B

This circuit monitors the PERSISTENCE control line and modulates the INTENSITY line to prevent the display from dimming when the persistence is decreased.

Orthogonality Adjust C

The ORTHOG adjustment R71 controls the amount of current through the orthogonality coil. The coil is placed in such a position that it affects horizontally deflected electrons more than it affects vertically deflected electrons. This assures that the horizontal deflection plates operate on the electron beam perpendicular to the angle at which the vertical deflection plates operate. The trace align coil operates equally on both vertically and horizontally deflected electrons. The TRACE ALIGN adjustment is in the Display Adjust Assembly.

Flood Gun Heater Interlock D

The Flood Gun Heater Interlock drops the −15V to approximately −12.6V to be used for the flood gun filament. It also disables the flood guns if the Storage Assembly is removed. Note that the +158V to the High Voltage Oscillator Assembly is also interlocked and disables the writing gun filament voltage and the high voltage for the CRT if the Storage Assembly is removed, but do not relay on this feature. Turn the instrument off before removing this or other assemblies.

Persistence Pulse Generator E

The Persistence Pulse Generator is a variable duty cycle, a stable multivibrator. The fixed pulse width is set by R5 and C6. The pulse repetition frequency is set by the current through Q2. (See the Display Truth Table.)

Storage Pulse Generator F

The Storage Pulse Generator is an astable multivibrator. The pulse width and pulse repetition frequency are set by R34, R35, and C13. (See the Display Truth Table.)

CRT Blanking G

The CRT Blanking circuit blanks the CRT in STORE mode and for the duration of the erase cycle. The BEAM DEFLECT line simultaneously goes high to saturate the Y Deflection Amplifier at its negative limit. This will prevent any electrons that may still escape from the writing gun from reaching the storage mesh, which would degrade store time.

Mesh Driver H

The Mesh Driver circuit controls the STORAGE MESH and COLLECTOR MESH potentials, which vary for different modes, persistence settings, and store times. (See the Display Truth Table.)

The collector mesh is between the flood guns and the storage mesh (closer to the storage mesh). It is always positive with respect to the storage mesh except in the ERASE mtde of operation; both are then at the same potential. In addition to accelerating flood gun electrons, the collector mesh also repels positive ions generated by the flood guns.

The storage mesh is just behind the CRT screen and is coated with non-conducting material. It is statically held at a slightly positive potential (approximately +3V). When the electron beam from the writing gun strikes the mesh coating, secondary electrons are emitted. This secondary emission creates a pattern of positive potential identical to the movement of the beam. Flood gun electrons are accelerated by this positive potential pattern and strike the phosphor screen, creating a visible display.

The storage mesh is pulsed with pulses of approximately 10 microseconds duration. These pulses erase the positive pattern on the storage mesh by discharging the mesh coating. The time required for this erasing operation is determined by the pulse repetition rate. The positive pattern on the mesh also may be neutralized manually by connecting the collector and storage meshes (ERASE). The high positive potential (approximately +156V) allows more uniform discharging of the surface. When the storage mesh is disconnected from the collector mesh and returned to +3V, the coated surface is at a uniform potential of −9V. In both nases, the screen has no illumination. The pattern is lost if the storage mesh fades positive, allowing the entire screen to be illuminated. This occurs when positive ions from the flood gun raise the surface potential of the storage mesh in random areas sufficiently to allow flood gun electrons to strike the screen.

Flood Gun Accelerator Driver I

Two flood guns, located just outside the horizontal deflection plates of the CRT, operate continuously when the power switch is on. An electron cloud, which is emitted by the flood guns, is accelerated toward the CRT screen by the COLLIMATOR and COLLECTOR MESH voltages. These electrons make stored or persisting displays visible. They are also used to erase stored and persisting displays.

The Flood Gun Accelerator Driver output transistors Q14 and Q15 are emitter followers that provide a low output impedance so that the flood gun accelerators can be switched quickly. (See the Display Truth Table.)

Collimator Driver L

The collimator is an internal coating along the tapered portion of the CRT. A positive voltage applied to the collimator focuses the flood-gun electrons. The flood-gun electrons are formed into a column perpendicular to, and approximately equal to, the width of the CRT screen.

The COLLIMATOR adjustment R62 is set so that the beam of the flood-gun electrons covers all but possibly one of the corners of the CRT screen.

Flood Gun Grid Driver J

The flood gun grids stay at a fixed potential independent of the display mode. (See the Display Table.) The FLOOD GUN GRID voltage is set by FLG adjustment R63 for the best combination of brightness and uniformity of the background in WRITE mode.

Pattern Adjust K

PAT pot R59 corrects for changes in the deflection factor of the CRT as a function of position of the electron beam. The two extremes of pattern maladjustment would appear as is shown below if one attempted to draw a square using the electron beam:

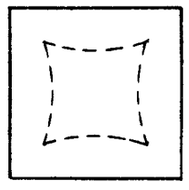

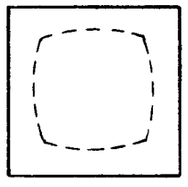

A7

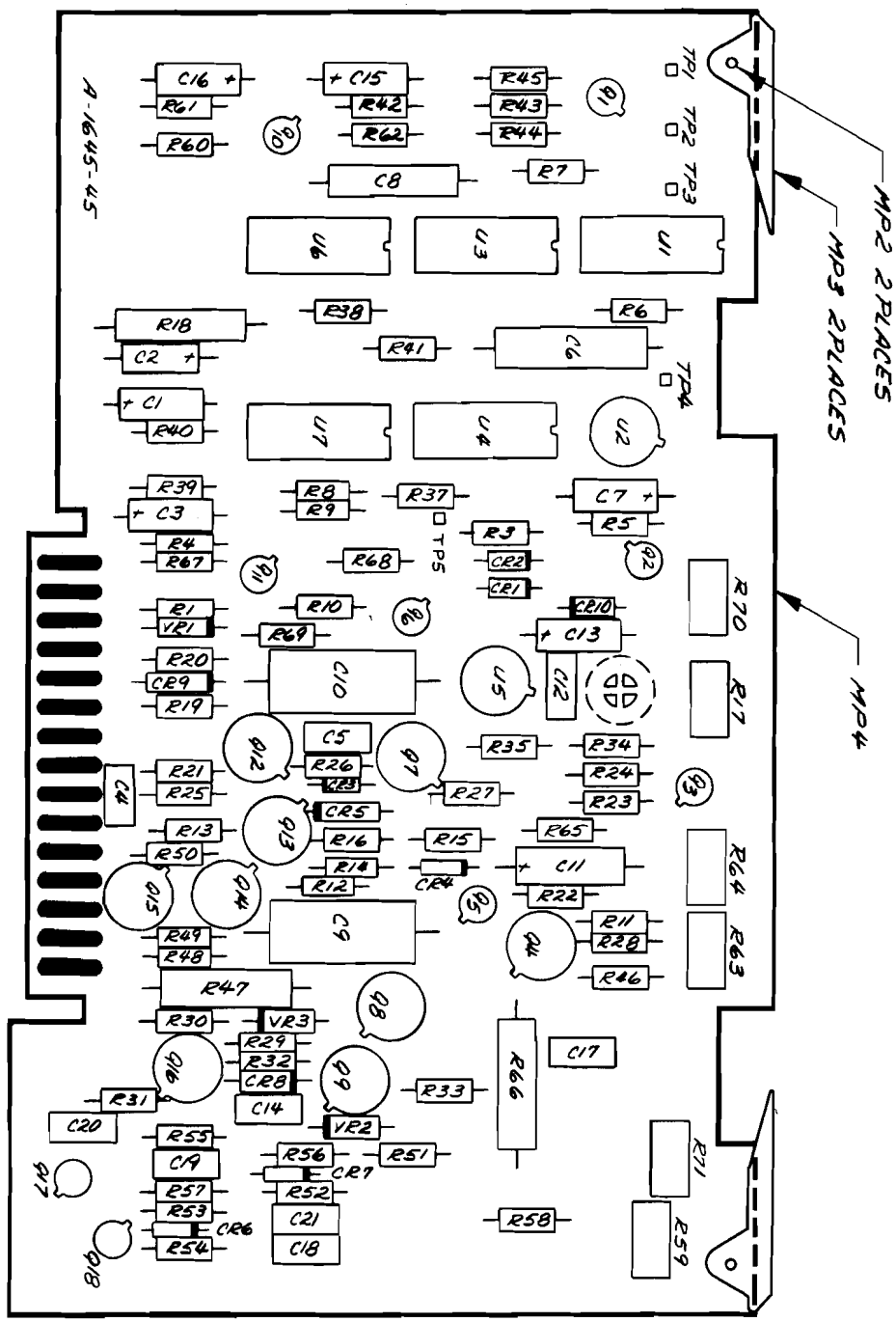

Figure 8-89. A7 Storage Assembly, Component Locations

Scans by ARTEK MEDIA =>

Scans by => ARTEK MEDIA © 2003-2005

A

A7 STORAGE ASSEMBLY
08565-60039

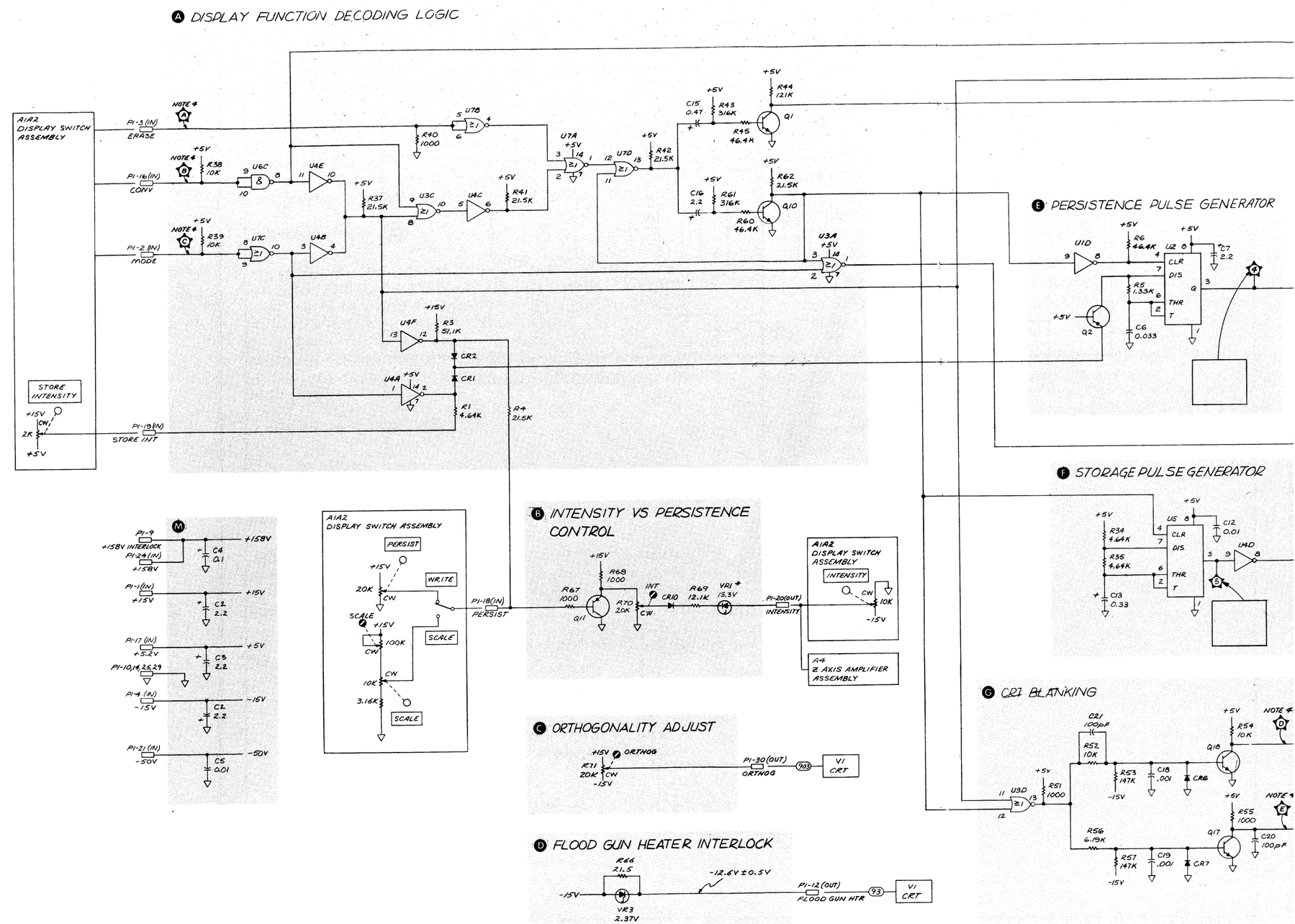

P1

PIN	SIGNAL	TO/FROM	FUNCTION BLOCK
1	+15V		M
16	CONV	A1A2J1-5	A
2	MODE	A1A2J1-15	A
17	+5.2V		M
3	ERASE	A1A2J1-13	A
18	PERSIST	A1A2J1-4	B
4	-15V		M
19	STORE INT	A1A2J1-14	A
5	COLLECTOR MESH	V1 (4)	H
20	INTENSITY	A4P1-28	B
6	NC		
21	-50V	A8	M
7	NC		
22	NC		
8	NC		
23	STORAGE MESH	V1 (95)	H
9	+158V INTERLOCK	A9	M
24	+158V		M
10	⇓		C
25	⇓		C
11	FGA	V1 (96)	I
26	COLLIMATOR	V1 (3)	L
12	FLOOD GUN HTR	V1 (93)	D
27	FGG	V1 (98)	I
13	BEAM DEFLECT	A6P1-20	G
28	PATTERN	V1 (98)	K
14	⇓		D
29	⇓		D
15	STORE BLNK	A6P1-20	G
30	ORTHOG	V1 (903)	C

Scans by => ARTEK MEDIA © 2003-2005

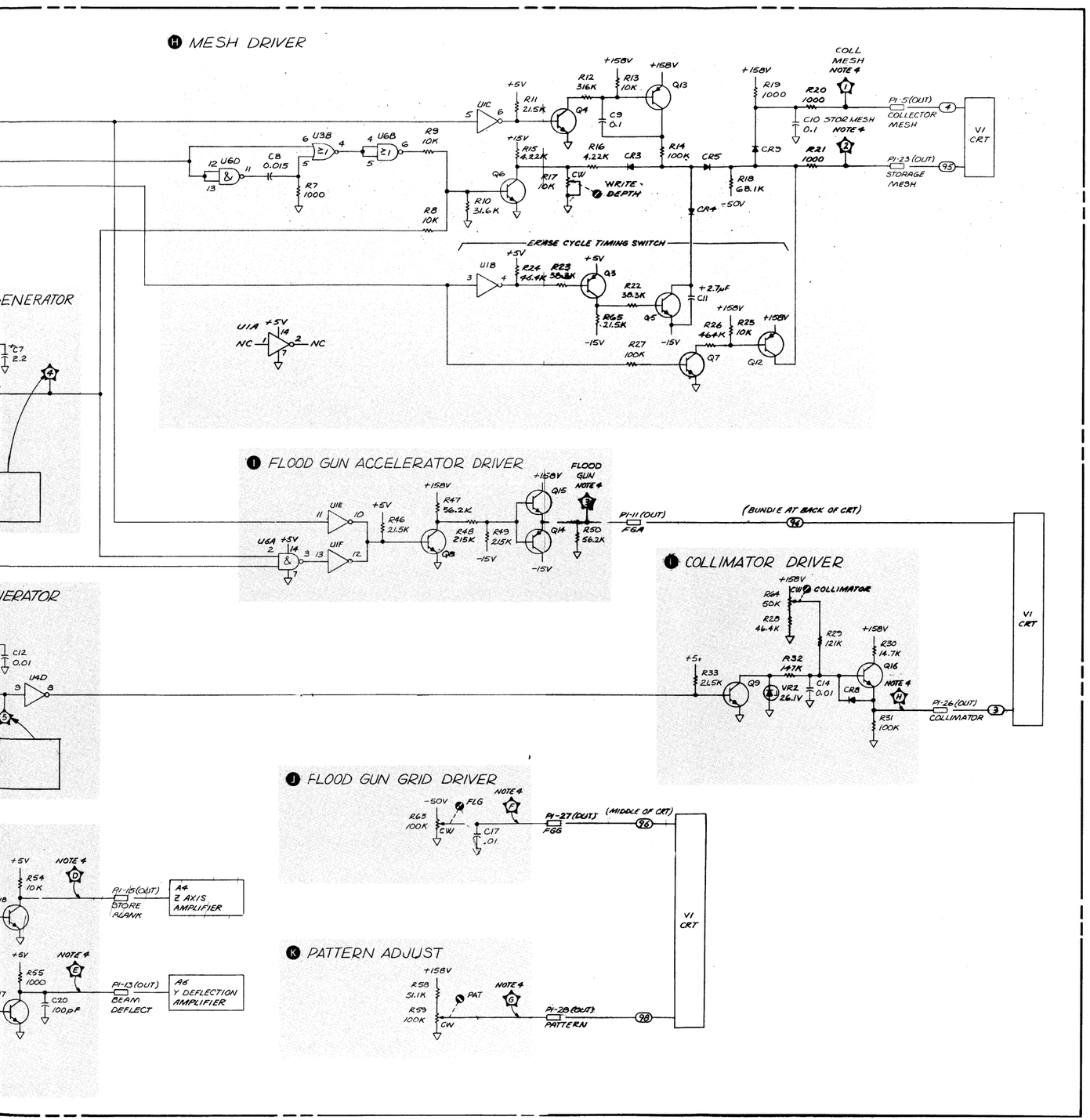

NOTES:

1. REFERENCE DESIGNATORS WITHIN THIS ASSEMBLY ARE ABBREVIATED. FOR COMPLETE DESIGNATOR, PREFIX WITH ASSEMBLY REFERENCE DESIGNATOR.
2. UNLESS OTHERWISE INDICATED:
   RESISTANCE IN OHMS (Ω)
   CAPACITANCE IN MICROFARADS (μF)
   INDUCTANCE IN MICROHENRIES (μH)
3. * ASTERISK DENOTES FACTORY SELECTED COMPONENT. NOMINAL VALUE IS SHOWN.
4. DISPLAY TRUTH TABLE

MODE OF OPERATION \ LINE	CONV B	MODE C	ERASE A	COLLIMATOR	STORAGE MESH	BEAM DEFLECT	STORE BLANK	SCALE BLANK	FLOOD GUN ACCELERATOR	FREQUENCY DISPLAY HOLD	NORMALIZER CONTROL LINE
WRITE	LOGIC HIGH	LOGIC LOW	LOGIC LOW	APPROXIMATELY 40V TO 90V ADJUSTABLE BY "COLLIMATOR" POT A7R64	PERSISTENCE PULSES 30μSEC; HEIGHT SET BY "WRITE DEPTH" POT A7R17 (0 TO 10V) DUTY CYCLE SET BY FRONT PANEL; PERSISTENCE	LOGIC LOW	LOGIC LOW	60V ± 5V NO ADJUSTMENT	LOGIC LOW	≥ 10 VOLTS NORMALIZER NOT CONNECTED; ≥ 10 VOLTS NORMALIZER CONNECTED BUT NOT NORMALIZING; ≤ -10 VOLTS NORMALIZER CONNECTED AND NORMALIZING
CONV	LOGIC LOW	LOGIC HIGH	LOGIC LOW	SAME AS WRITE MODE	-50V	LOGIC LOW	LOGIC LOW	SAME AS WRITE MODE	LOGIC LOW		
STORE	LOGIC HIGH	LOGIC HIGH	LOGIC LOW	SAME AS WRITE MODE	APPROXIMATELY 3.5 VOLTS	LOGIC HIGH	LOGIC LOW	STORAGE PULSES 30μSEC +58V -8V; DUTY CYCLE SET BY STORE INTEN	LOGIC HIGH		
SCALE	LOGIC HIGH	LOGIC LOW	LOGIC HIGH	SAME AS WRITE MODE	SAME AS WRITE MODE EXCEPT DUTY SET BY FRONT PANEL; SCALE INTEN	LOGIC LOW	LOGIC HIGH	SAME AS WRITE MODE	LOGIC HIGH		
ERASE (ENABLED IN WRITE MODE ONLY)	LOGIC HIGH	LOGIC LOW	LOGIC HIGH	3mSEC 10V; SUPERIMPOSED ON DC LEVEL	100mSEC +158V; PERSISTENCE PULSES 0V -15V; 0.5SEC	LOGIC HIGH FOR DURATION OF ERASE CYCLE	LOGIC LOW	SAME AS WRITE MODE	LOGIC LOW		

FIXED VOLTAGES:

FLOOD GUN GRID	0 TO -50V ADJUSTABLE BY A7R63
ASTIGMATISM	-15V TO +15BV ADJUSTABLE BY ASTIG
PATTERN	0 TO 100V ADJUSTABLE BY A7R58
WRITE GUN ACC	+68V ± 5V
FLOOD GUN HTR	-12.6V ± 0.5V
COLLECTOR MESH	+158V

LOGIC HIGH 2.0V ≤ V ≤ 5.25V
LOGIC LOW 0V ≤ V ≤ 0.8V

5. REFERENCE DESIGNATORS

A7	
LAST USED	NOT USED
C21, C29, Q18, R71, U7, VR3	R36

31
A7

Figure 8-90. A7 Storage Assembly, Schematic Diagram

Scans by => ARTEK MEDIA © 2003-2005

SERVICE SHEET 32

A8 HIGH VOLTAGE POWER SUPPLY ASSEMBLY, CIRCUIT DESCRIPTION

WARNING

Because of the high voltages found in this assembly, servicing should be accomplished only by qualified personnel.

The High Voltage Power Supply Assembly provides operating potentials for the CRT. These include −3000V for the cathode, approximately −3050V for the intensity grid, +7000V for the post accelerator (by way of High Voltage Multiplier U1), −50V for CRT controls, and approximately −2000V for focus.

Intensity Clamp G

The control grid voltage must be more negative than the cathode voltage to limit the density (intensity) of the electron beam. The control grid voltage is determined by both the gate voltage from the Z Axis Amplifier Assembly and the INTENSITY LIMIT pot in the High Voltage Oscillator Assembly. The Intensity Clamp limits the voltage from T1 (appearing at TP2), rectifies the voltage, and adds it to the cathode voltage to develop the control grid voltage.

−50V Power Supply J

The −50V Power Supply is needed in the Storage Assembly to set the flood gun grid voltage and is used in the ERASE cycle.

Focus Limit H

The FOCUS LIMIT adjustment R13 is in series with the FOCUS control on the display front panel. R13 should be adjusted so that optimum focusing is attained with the FOCUS control near mid-position.

A9 HIGH VOLTAGE OSCILLATOR ASSEMBLY, CIRCUIT DESCRIPTION

WARNING

Because of the high voltages found in this assembly, servicing should be accomplished only by qualified personnel.

The High Voltage Oscillator Assembly senses the CRT cathode voltage and varies the average base current of Q1 to maintain the cathode at −3000V.

Intensity Limit A

The INT LIMIT ADJ potentiometer R1 acts with the Intensity Clamp circuit in the High Voltage Power Supply Assembly to determine the CRT control grid voltage.

+26V Filter B

This filter serves two purposes. First, it prevents the 40 kHz from the transformer from being superimposed on the power supplies. This is accomplished by the pi filter C9, L1, L3 and C1. Second, it prevents the 120 Hz on the +26V UNREG line from modulating the transformer current. C10, Q2, and Q3 accomplish this.

Oscillator Driver and Oscillator Bias Current Regulator C D

When line power is applied to the instrument, approximately +26V is applied to Q1 in the Oscillator Driver and the primary of transformer A8T1. Current is drawn through Q1 and the transformer primary producing a magnetic field. This field is coupled back to the base of Q1, and Q1 draws more current, producing a stronger field and feedback to the base of Q1. This continues until the transformer core saturates, then Q1 draws less current, and the field collapses. The collapsing field is fed back to the base of Q1 as a turn-off signal, causing oscillations at about 40 kHz.

A sample of the CRT cathode voltage is fed back through the High Voltage Feedback circuit into the Oscillator Bias Current Regulator, where it is compared with a reference voltage from the interlocked +158V. Any difference is amplified by U1. The amplified difference drives the base of Q1 to correct the error and maintain the proper average base curent for Q1. U1 does not switch at a 40 kHz rate.

Scans by => ARTEK MEDIA © 2003-2005

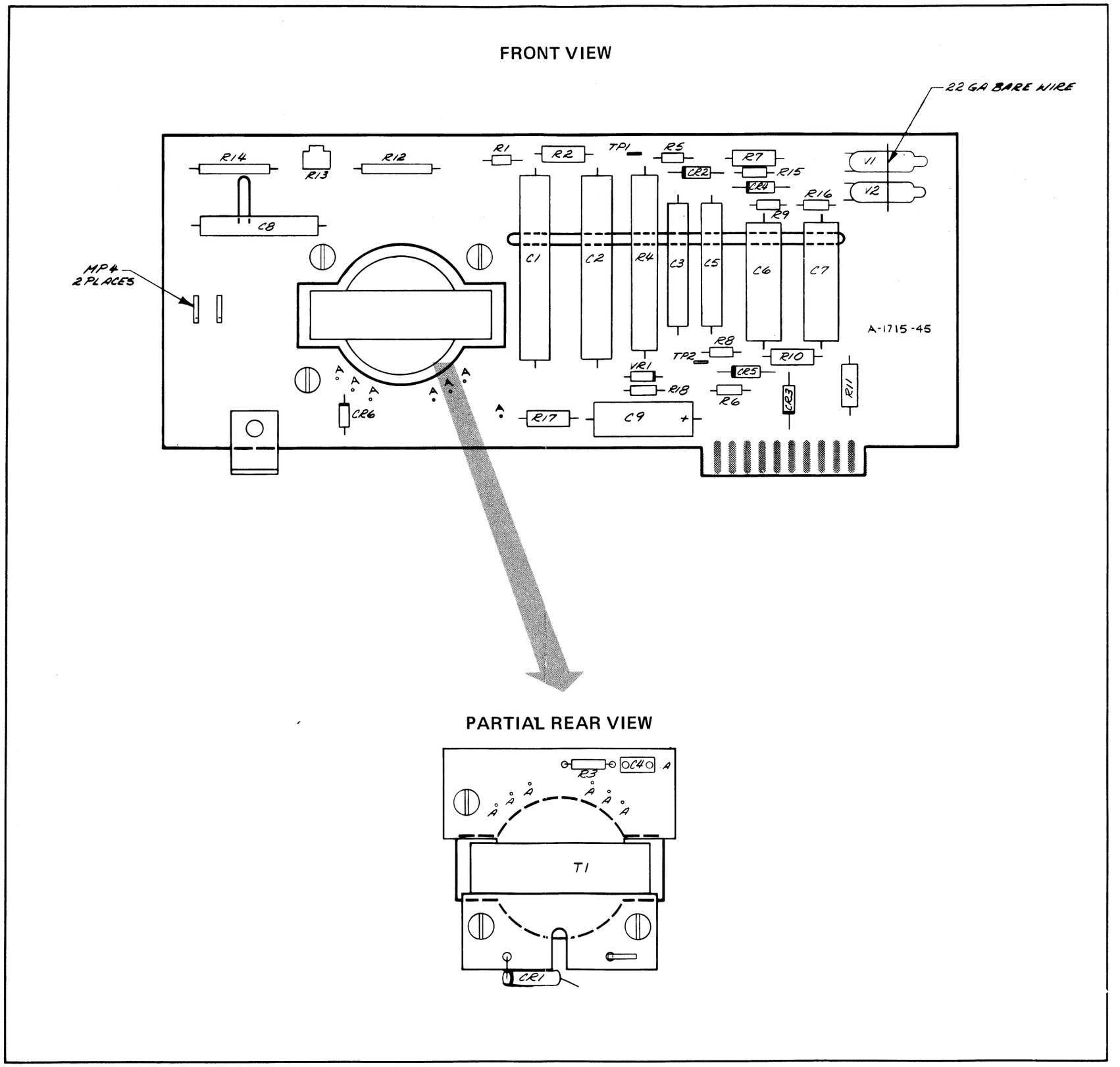

Figure 8-91. A8 High Voltage Power Supply Assembly, Component Locations

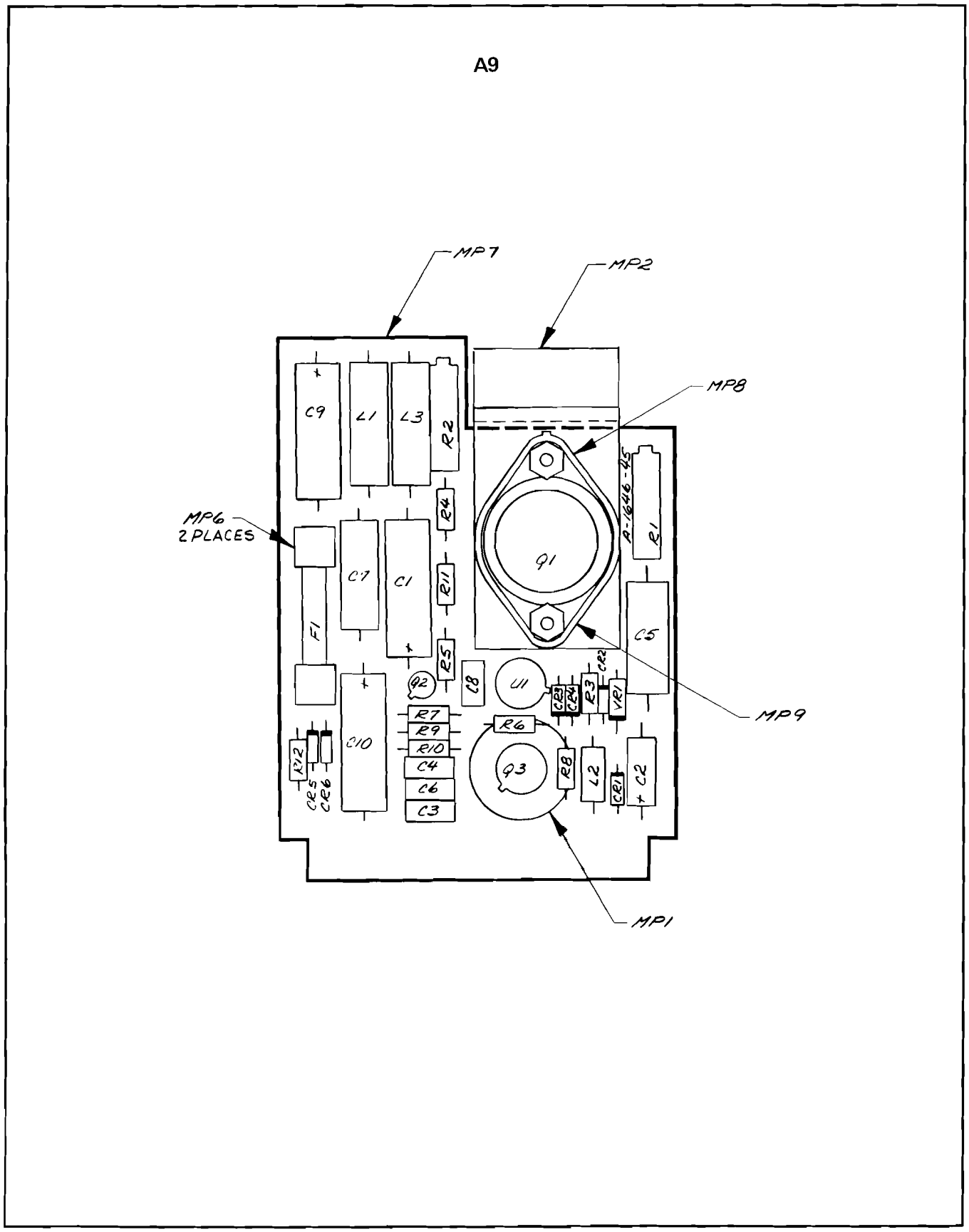

Figure 8-92. A9 High Voltage Oscillator Assembly, Component Locations

Scans by ARTEK MEDIA =>

Scans by => ARTEK MEDIA © 2003-2005

A8P1

PIN	SIGNAL	TO/FROM	FUNCTION BLOCK
1	PRIMARY	A9P1-30	E
11	PRIMARY	A9P1-30	E
2	BASE DRIVE RETURN	A9P1-29	E
12	BASE DRIVE RETURN	A9P1-29	E
3	BASE DRIVE	A9P1-28	E
13	BASE DRIVE	A9P1-28	E
4	+26VF	A9P1-27	E
14	+26VF	A9P1-27	E
5	INTENSITY LIMIT	A9P1-26	G
15	INTENSITY LIMIT	A9P1-26	G
6	▽		
16	▽		
7	H.V. FEEDBACK	A9P1-24	I
17	H.V. FEEDBACK	A9P1-24	I
8	▽		
18	▽		
9	-50V	A7P1-21	E
19	-50V	A7P1-21	E
10	GATE	A4P1-6,21	G
20	GATE	A4P1-6,21	G

A9P1

PIN	SIGNAL	FROM/TO	FUNCTION BLOCK
1	+26V UNREG		B
16	+26V UNREG		B
2	▽		B
17	▽		B
3	-15V		D
18	-15V		D
4	+158V	A7P1-24	A
19	+158V	A7P1-24	A
5	+15V		D
20	+15V		D
6	N.C.		
21	N.C.		
7	N.C		
22	N.C		
8	N.C.		
23	N.C.		
9	N.C		
24	H.V. FEEDBACK	A8P1-7,17	D
10	N.C.		
25	▽		B
11	INTENSITY LIMIT	A8P1-5,15	A
12			
27	+26VF	A8P1-4,14	B
13			
28	BASE DRIVE	A8P1-3,13	D
14			
29	BASE DRIVE RETURN	A8P1-2,12	C
15			
30	PRIMARY	A8P1-1,11	C

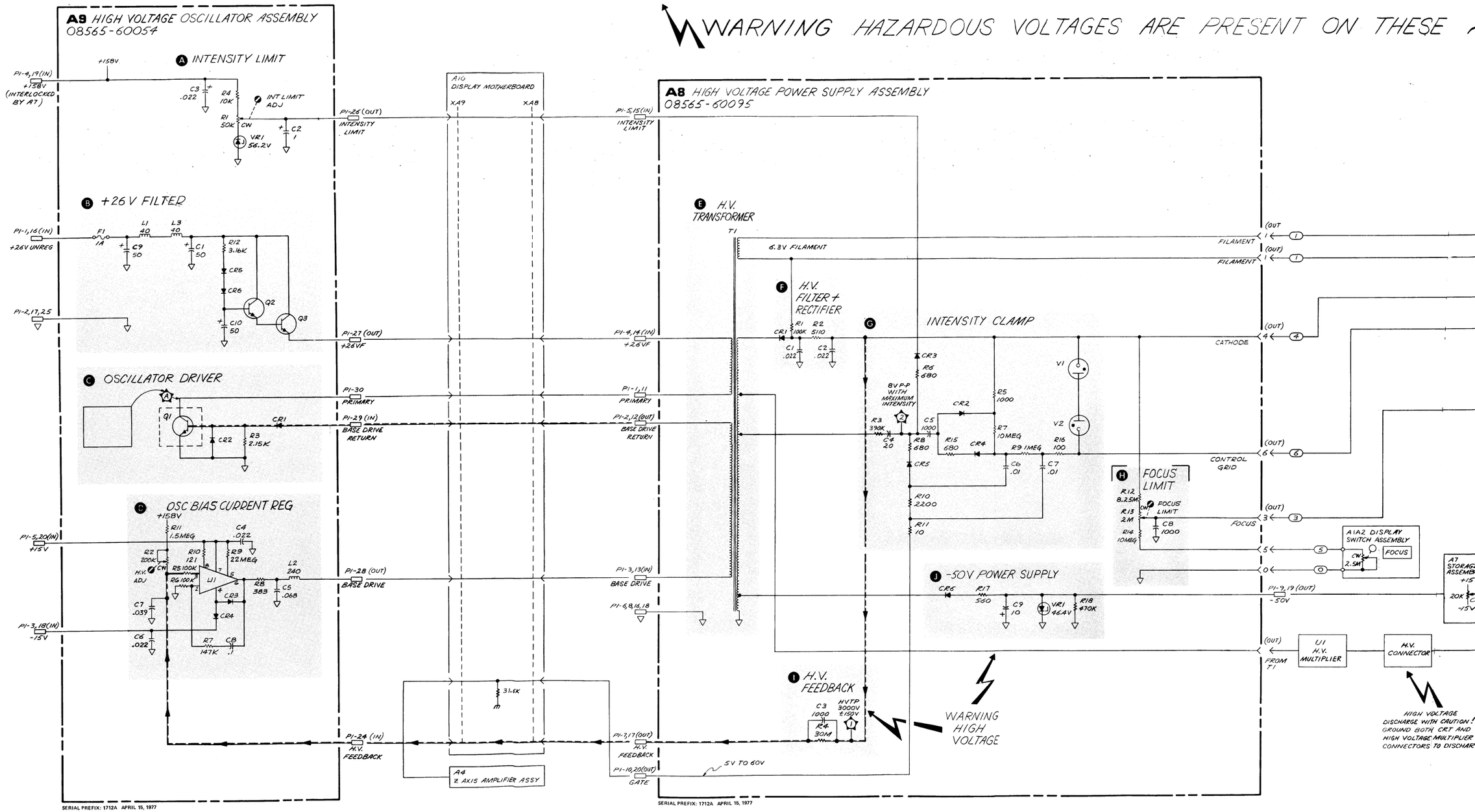

Scans by => ARTEK MEDIA © 2003-2005

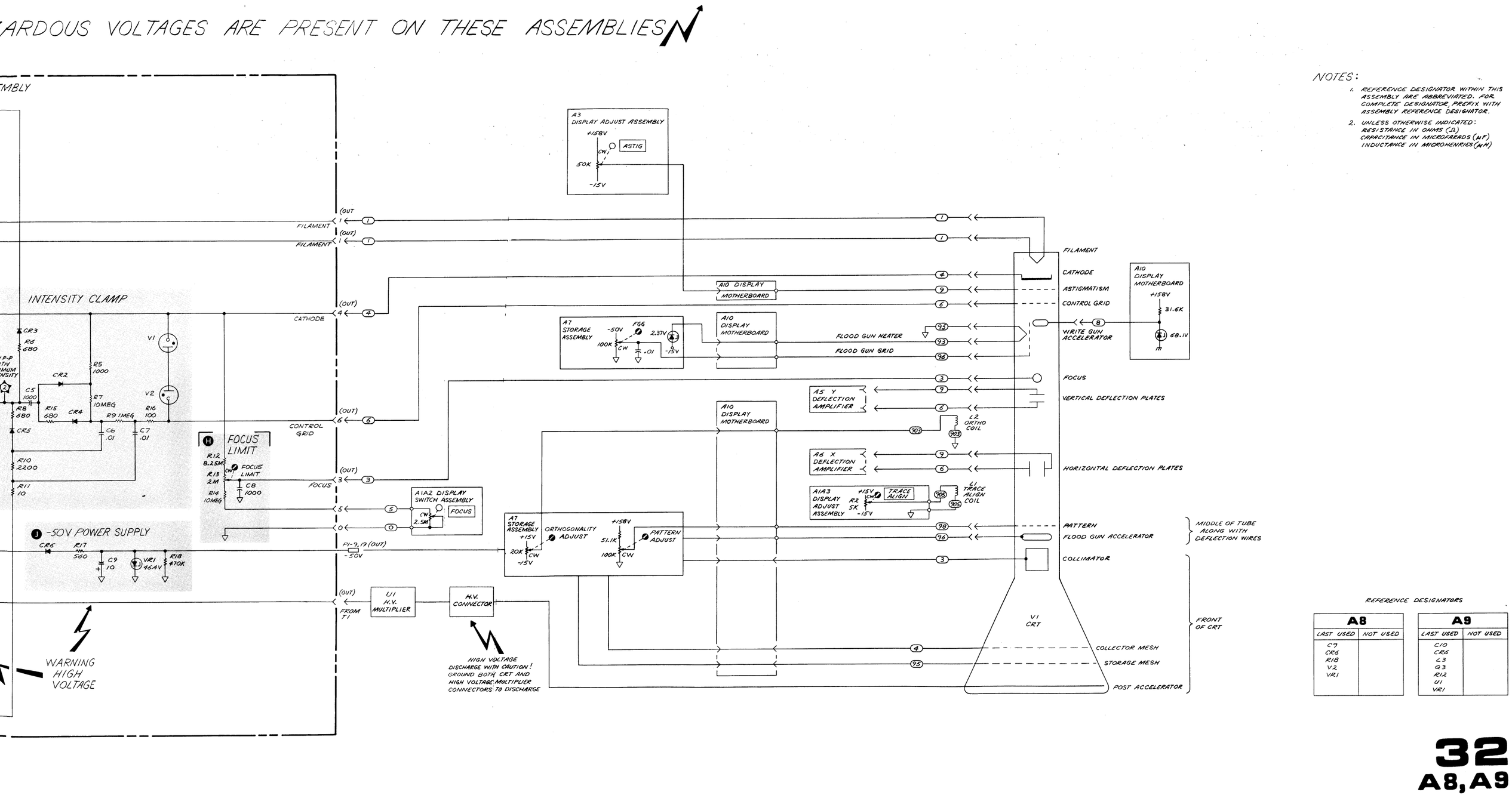

Figure 8-93. A8 High Voltage Power Supply Assembly and A9 High Voltage Oscillator Assembly, Schematic Diagram

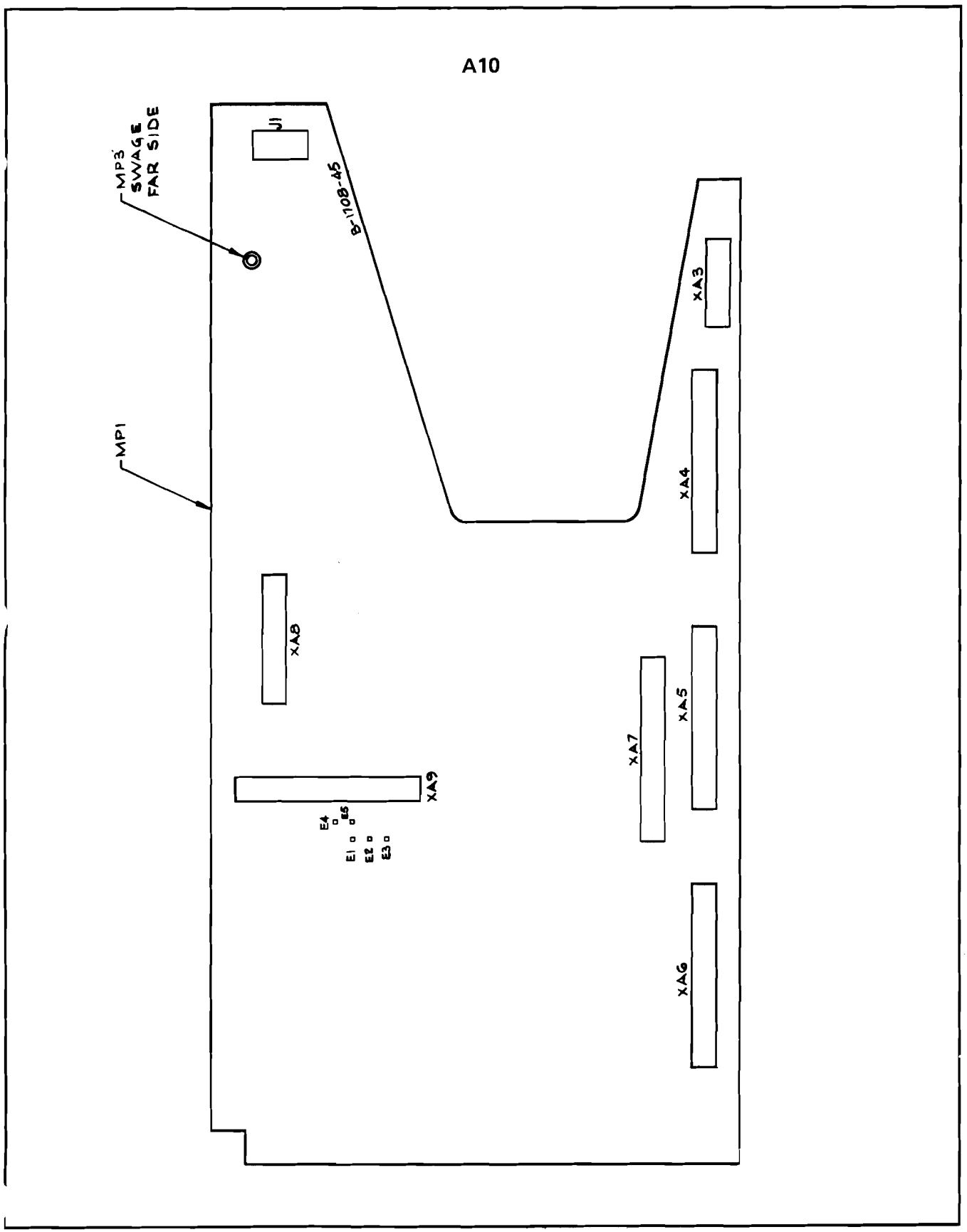

Figure 8-94. A10 Display Mother Board, Component Locations

Scans by ARTEK MEDIA =>

Scans by => ARTEK MEDIA © 2003-2005

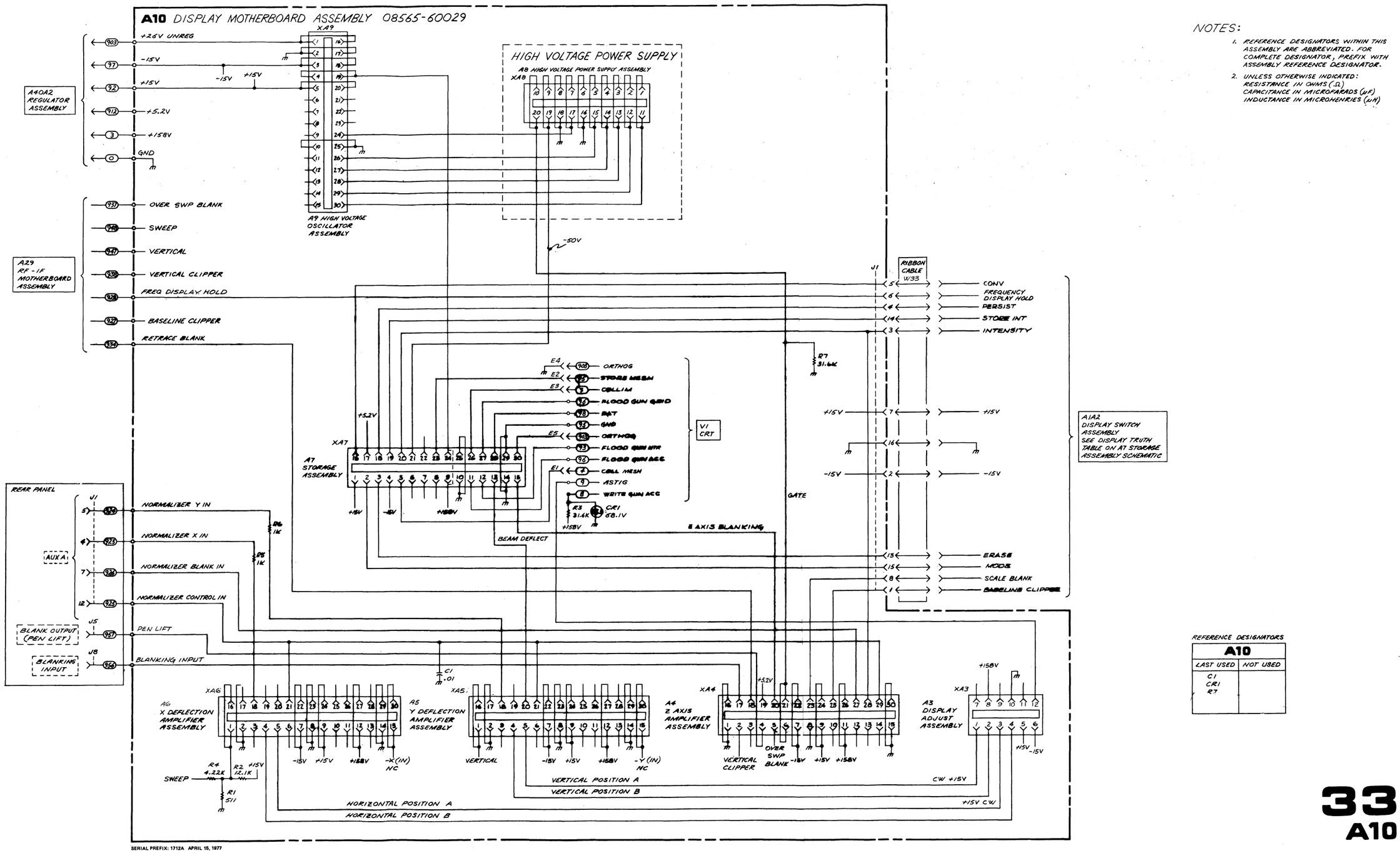

Figure 8-95. A10 Display Motherboard, Schematic Diagram

Scans by => ARTEK MEDIA © 2003-2005

SERVICE SHEET 34

A38 READOUT INPUT ASSEMBLY, CIRCUIT DESCRIPTION

The Readout Input Assembly decodes front-panel control positions and time multiplexes them onto a bus. Some logical manipulation is performed to make the control code patterns more useful. As a result, seven groups of inputs derived from front-panel control codes are presented to the multiplex scanner. The seven groups are scanned in a sequence determined by the Readout Driver Assembly and are sent to that assembly via the six-line MX bus. The order in which the scan occurs (in terms of control positions) and the number of digits affected are as follows:

1. RESOLUTION BW: 3 digits
2. REF LEVEL dBm: sign, hundreds, tens; 3 digits
3. REFERENCE LEVEL FINE: units; 1 digit
4. INPUT ATTEN: 2 digits
5. LOG/DIV: 2 digits
6. SWEEP TIME/DIV: 2 digits
7. FREQUENCY SPAN/DIV: 3 digits

Function Scanner C

The Function Scanner multiplexes the seven groups of input lines. These input groups (each comprising six or fewer lines) are derived by processing the front panel control codes through various interface circuits. The time-multiplexed output from the Function Scanner occurs on the MX bus: lines MX1 through MX6. A low level on one of the Function Scanner Enable lines, FSE1 through FSE7, causes one input group to appear on the MX bus in inverted form. All logic levels connected with the scanner are 5-volt CMOS levels; i.e., a low must be between GND and +1.5V and a high must be between +3.5V and +5V.

BW Interface J

The six input lines to the BW Interface swing from approximately +15V to approximately −3.5V. These levels are shifted to 5-volt CMOS levels by resist or dividers with one end tied to a resistor divider, R20 and R21, and are sent to the Function Scanner. When FSE1 goes low, the input information appears on the MX bus in inverted form.

IF Gain Interface F

The IF Gain Interface has two types of input. IFG1, IFG2, and IFG3 swing between GND and a temperature-compensated +10V level. These three lines go directly into CMOS inverters operating at the +10V level, the outputs of which are resistor-divided down to 5-volt CMOS levels. IFG4, IFG5, and IFG6 have three possible input levels. These are reduced to 5-volt CMOS levels by resistors R1 through R12 and EXCLUSIVE OR gates U11A, U11B, and U11C. When one of these inputs is approximately at GND potential, the output of the corresponding gate will be low. When the input assumes either a high level of approximately +15V or a low level of approximately −10V, the output of the gate will go high. These six lines go to the IF Gain Decoder.

IF Gain Decoder H

The IF Gain Decoder takes the six lines from the IF Gain Interface and reduces them to a four-bit binary number which reflects the IF attenuation in 10-dB increments. The four outputs go to an input port of the Reference Level Adder.

Reference Level Adder I

The Reference Level Adder takes the binary number generated by the IF Gain Decoder and the binary number generated by the Input Attenuator Interface and adds them, using a four-bit full ad U16, and sends the resulting five-bit binary number to the Function Scanner. Also, pull-up resistors to +5V are provided for lines G0 through G3, which come in as either an open or a GND.

The Reference Level Adder has three additional functions. First, if the REFERENCE LEVEL FINE control is set to a number that exceeds nine, the output of U22B goes high and initiates a carry to the adder (increases the output result by one). Second, since the REFERENCE LEVEL has a range of +70 dBm to −102 dBm, the number displayed as the least significant digit of REF LEVEL must change depending on whether REF LEVEL is positive or negative. For example, if the REFERENCE LEVEL switch is set to 22 dBm and the REF LEVEL dBm is stepped down in 10 dB increments, the numbers on the Bezel Display must go 22, 12, 2, −8, −18, etc. To accomplish this, the sign of the reference level is detected by gates U22A and U14A and sent to the scanner in the same group as the REFERENCE LEVEL FINE code G0 through G3. Third, the place where the carry affects the tens digit depends on whether positive or negative numbers are being displayed. When counting down from 61, for example, the sequence is 61, 60, 59, etc., and the tens digit changes to 5 after crossing zero. On the other hand, when counting down from −29, for example, the sequence is −29, −30, −31, etc., and the tens digit changes before crossing zero. A zero occurring in the least significant digit and the polarity of the reference level are detected by gates U2A, U2B, U2C, U23B, and U14C. The output of U14C is high unless the REFERENCE LEVEL FINE control is at 0 or 10 and the polarity of the reference level is positive; then it goes low.

The reason for this apparent added complexity is that three-digit signed BCD arithmetic is being attempted with only a four-bit binary adder and no memory.

The inputs described above appear as two groups of inputs to the Function Scanner. When FSE2 goes low, the five bits from the adder and the line indicating a zero in the least significant digit are put on the MX bus in inverted form. When FSE3 goes low, the information on lines G0 through G3, which carry the information for the least significant digit of the REF LEVEL, the line indicating whether dBm or dBV selected, and the line indicating positive or negtive numbers are placed on the MX bus in inverted form.

The jumpers for dBm/dBμV are normally connected for dBm. In the dBμV option the following changes occur:

1. A new set of binary numbers is generated by adding a binary 8 to the adder (the most significant bit of the adder Input Attenuator port is forced high; pin 15, U16).
2. Since dBμV will never involve negative numbers, the detection of a zero in the least significant digit is not necessary; it is avoided by removing pin 15, U15 from the output of U23B, and forcing it low.
3. Since dBμV is offset 5 dB from dBm in the least significant digit, the place where a carry occurs must be altered by changing the carry input to the adder from the output of U22B to line G3.
4. The fact that the REFERENCE LEVEL FINE code must be interpreted with a 5-dB offset is indicated by setting pin 15, U19 high.

These alterations are interpreted by the Readout Driver Assembly to yield a readout in dBμV. The front panel controls will still indicate dBm.

Input Attenuator Interface D

The inputs to the Input Attenuator Interface swing between GND and approximately +28V. These levels are reduced by resistor dividers to 5-volt CMOS levels, three of which are sent to U1D and U22C so that the final three lines will be a binary representation of the INPUT ATTEN setting. This information goes to one input of the Reference Level Adder and also to the Function Scanner. The three spare inputs to the Function Scanner are grounded. The six lines appear in inverted form on the MX bus when FSE4 is low.

Log Scale Interface E

Three of the inputs to the Log Scale Interface switch between +15V and −3V and are resistor-divided down to yield 5-volt CMOS levels. The fourth input swings between +15V and a temperature-compensated −10V level. This is reduced by a resistor divider referenced to +3V to yield 5-volt CMOS levels. The two spare inputs to the Function Scanner are grounded. When FSE5 goes low, the MX bus carries the inverted form of these six inputs.

A10 Display Motherboard
SERVICE SHEET 33

Sweep Time Interface A

There are six main inputs to the Sweep Time Interface that swing between GND and a +10V temperature-compensated level. They require a high input impedance and thus go directly to CMOS inverters operating at the +10V level, the outputs of which are resistor-divided down to 5-volt CMOS levels. The Manual Sweep (MAN SWP) line swings from GND to approximately +12V. It is reduced to a 5-volt CMOS level by a resistor divider and sent to U17C and U23A. Its function is to blank the sweep time readout when either manual or external sweep is used. Four input lines plus the two from the gates are sent to the scanner and appear on the MX Bus when FSE6 goes low. The sense of the levels appearing on the MX bus is the same as that appearing at the input to the Sweep Time Interface, since two inversions occur.

Frequency Span Interface B

There are nine input lines to the Frequency Span Interface. All but two swing from approximately +15V to approximately −14V. this is reduced to 5-volt CMOS levels by resistor dividers referenced to +3V. The two exceptions are the FULL and MULTIBAND lines, which swing from +15V to −39V. These two lines are diode ORed and then reduced to 5-volt CMOS levels by a resistor divider referenced to GND. The resulting eight-line switch code can be reduced to six lines by using gates U14B and U17B. The final six lines go to the Function Scanner and appear in inverted form on the MX bus when FSE7 goes low.

Scans by ARTEK MEDIA =>

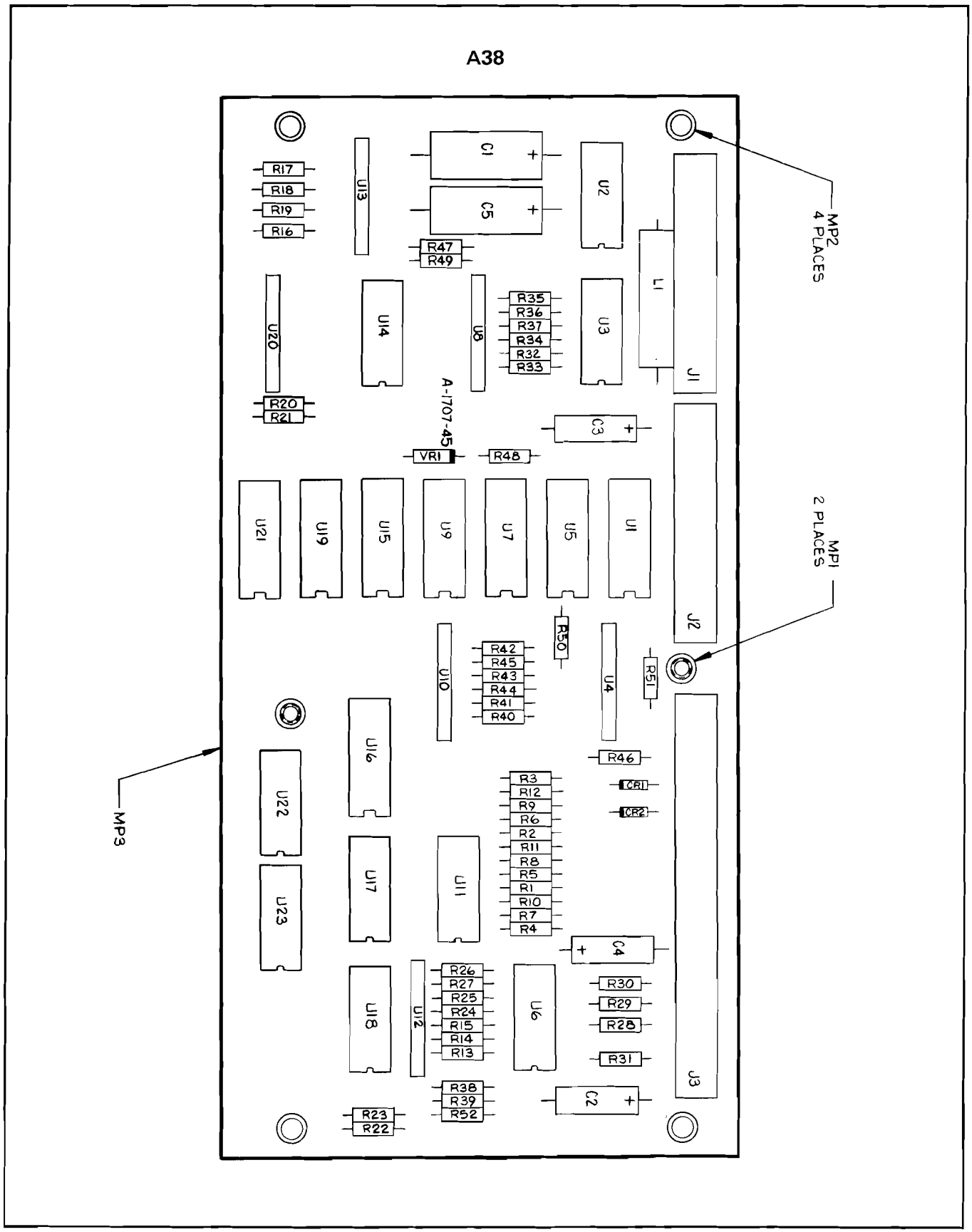

Figure 8-96. A38 Readout Input Assembly, Component Locations

Scans by ARTEK MEDIA =>

FREQUENCY SPAN/DIV

	LINE –								
SETTING (Hz)	FS ÷ 100	FS ÷ 10	NAR-ROW	FS ÷ 2	FS ÷ 4	MULTI-BAND	FULL	FS X 2.5	ZERO
1K	H	H	H	H	L	LL	LL	L	L
2K	H	H	H	L	L	LL	LL	L	L
5K	H	L	H	L	H	LL	LL	L	L
10K	H	L	H	H	L	LL	LL	L	L
20K	H	L	H	L	L	LL	LL	L	L
50K	L	H	H	L	H	LL	LL	L	L
100K	L	H	H	H	L	LL	LL	L	L
200K	L	H	H	L	L	LL	LL	L	L
500K	L	L	H	L	H	LL	LL	L	L
1M	L	L	H	H	L	LL	LL	L	L
2M	L	L	H	L	L	LL	LL	L	L
5M	L	H	L	L	H	LL	LL	L	L
10M	L	H	L	H	L	LL	LL	L	L
20M	L	H	L	L	L	LL	LL	L	L
50M	L	L	L	L	H	LL	LL	L	LL
100M	L	L	L	H	L	LL	LL	L	L
200M	L	L	L	L	L	LL	LL	L	L
500M	L	L	L	L	L	LL	LL	H	L
F	L	L	L	L	L	LL	H	L	L
FULL	L	L	L	L	L	LL	H	L	L
1.7–22 GHz	L	L	L	L	L	H	LL	L	L
ZERO	H	X	H	X	X	X	X	X	H

H ≃ +15V L ≃ –14V
LL ≃ –39V X = EITHER STATE

SWEEP TIME/DIV

	LINE –						
SETTING (SEC)	ST CAL	ST FAST	ST X100	ST X10	ST X5	ST X2	MAN SWP
10	∇	H	H	H	H	H	∇
5	∇	H	H	H	H	∇	∇
2	∇	H	H	H	∇	H	∇
1	∇	H	H	∇	H	H	∇
.5	∇	H	H	∇	H	∇	∇
.2	∇	H	H	∇	∇	H	∇
.1	∇	H	∇	H	H	H	∇
50m	∇	H	∇	H	H	∇	∇
20m	∇	H	∇	H	∇	H	∇
10m	∇	H	∇	∇	H	H	∇
5m	∇	H	∇	∇	H	∇	∇
2m	∇	H	∇	∇	∇	H	∇
1m	∇	∇	H	∇	H	H	∇
.5m	∇	∇	H	∇	H	∇	∇
.2m	∇	∇	H	∇	∇	H	∇
.1m	∇	∇	∇	H	H	H	∇
50μ	∇	∇	∇	H	H	∇	∇
20μ	∇	∇	∇	H	∇	H	∇
10μ	∇	∇	∇	∇	H	H	∇
5μ	∇	∇	∇	∇	H	∇	∇
2μ	∇	∇	∇	∇	∇	H	∇
AUTO	H	H	H	H	H	H	∇
EXT	X	X	X	X	X	X	HH

H ≃ +10V ∇ ≃ GND
HH ≃ +12V X = EITHER STATE

AMPLITUDE SCALE

	LINE			
SETTING	10 dB/ DIV	5 dB/ DIV	2 dB/ DIV	LOG/ LIN
10 dB/	H	L	L	H
5 dB/	L	H	L	H
2 dB/	L	L	H	H
1 dB/	L	L	L	H
LIN	L	L	L	LL

H ≃ +15V
L ≃ –3.5V
LL ≃ –10V

INPUT ATTEN

SETTING	LINE			
	1ØA1	2ØA2	2ØA3	2ØA4
0 dB	H	H	H	H
10 dB	∇	H	H	H
20 dB	H	∇	H	H
30 dB	∇	∇	H	H
40 dB	H	∇	∇	H
50 dB	∇	∇	∇	H
60 dB	H	∇	∇	∇
70 dB	∇	∇	∇	∇

H ≃ +28V ∇ ≃ GND

REF LEVEL

	LINE IFG –					
SETTING*	1	2	3	4	5	6
0 dB	H	H	H	∇	∇	∇
–10 dB	∇	H	H	∇	∇	∇
–20 dB	H	∇	H	∇	∇	∇
–30 dB	∇	∇	H	∇	∇	∇
–40 dB	H	∇	∇	∇	∇	∇
–50 dB	∇	∇	∇	∇	∇	∇
–60 dB	∇	∇	∇	H/L	∇	∇
–70 dB	∇	∇	∇	H/L	H/L	∇
–80 dB	∇	∇	∇	H/L		H/L
–90 dB	∇	∇	∇	H/L	H/L	H/L

H ≃ +10V ∇ ≃ GND
H/L ≃ EITHER +15V OR –10V
* WITH INPUT ATTEN AT 0 dB

RESOLUTION BANDWIDTH

	LINE BW –					
SETTING (Hz)	1	2	4	Ø	8	9
1K	H	L	L	L	H	L
1K	H	L	L	L	L	H
1K	H	L	L	L	L	L
3K	L	H	L	L	L	L
10K	L	L	L	L	L	L
30K	L	L	H	L	L	L
100K	H	L	L	H	L	L
300K	L	H	L	H	L	L
1M	L	L	L	H	L	L
3M	L	L	H	H	L	L

H ≃ +15V L ≃ –3.5V

REF LEVEL FINE

	LINE G –			
SETTING	3	2	1	Ø
0	∇	∇	∇	∇
–1	∇	∇	∇	H
–2	∇	∇	H	H
–3	∇	∇	H	∇
–4	∇	H	H	∇
–5	∇	H	H	H
–6	∇	H	∇	H
–7	∇	H	∇	∇
–8	H	H	∇	∇
–9	H	H	∇	H
–10	H	H	H	H
–11	H	H	H	∇
–12	H	∇	H	∇

H ≃ +5V
∇ ≃ GND

Figure 8-97. A38 Readout Input Assembly, Schematic Diagram (1 of 2)

Scans by ARTEK MEDIA =>

Scans by => ARTEK MEDIA © 2003-2005

A

A38 READOUT INPUT ASSY 03565-60037

J1

PIN	SIGNAL	TO/FROM	FUNCTION BLOCK
1	BW 2	A2A4 J3-1	J
2	BW 3	A2A4J1-2	NOT USED
3	BW 1	A2A4 J3-3	J
4	BW 8	A2A4 J3-4	J
5	BW 9	A2A4 J3-5	J
6	BWK	A2A4 J1-6	K
7	BW COM	A2A1J2-15	NOT USED
8	STS	A2A4 J1-8	K
9	NOT USED	A2A4J1-9	NOT USED
10	+5.2V	A40A2J2-10 (912)	K
11	▽	A29	K
12	STM	A2A4 J1-12	K
13	STU	A2A4J1-13	K
14	+10VTV	A16P2-12	A
15	GØ	A2A4 J3-15	G
16	ST FAST	A2A4J1-16	A
17	G1	A2A4 J3-17	G
18	ST CAL	A2A4J1-18	A
19	G2	A2A4 J3-19	G
20	STX100	A2A4 J1-20	A
21	G3	A2A4 J3-21	G
22	STX10	A2A4 J1-22	A
23	BW 4X	A2A4J1-23	NOT USED
24	STX5	A2A4 J1-24	A
25	BW ØX	A2A4J1-23	NOT USED
26	STX2	A2A4 J1-26	A

J2

1	NC		
2	NC		
3	NC		
4	NC		
5	NC		
6	NC		
7	▽		K
8	LOG/LIN	A2A1J1-8 A39P1-8	E
9	▽		K
10	+15V	A39P1-10	K
11	NC		
12	−15V	A39P1-12	K
13	MX2	A39 P1-13	C
14	MX4	A39 P1-14	C
15	MX1	A39 P1-15	C
16	MX5	A39 P1-16	C
17	FSE-5	A39P1-17	C
18	FSE-6	A39P1-18	C
19	MX6	A39 P1-19	C
20	FSE-4	A39P1-18	C
21	+5V	A39P1-21	K
22	MX3	A39 P1-22	C
23	FSE-7	A37P1-23	C
24	FSE-2	A39P1-24	C
25	FSE-3	A39P1-25	C
26	FSE-1	A39P1-26	C

J3

PIN	SIGNAL	TO/FROM	FUNCTION BLOCK
1	NARROW	A2A1 J1-1	B
2	B6	A2A1J1-2	NOT USED
3	2ØA3	A2A1 J1-23	D
4	B7	A2A1J1-4	NOT USED
5	ZERO	A2A1 J1-5	B
6	B8	A2A1J1-6	NOT USED
7	B4	A2A1J1-7	NOT USED
8	IFG 6	A2A1 J1-8	F
9	MULTIBAND	A2A1 J1-9	B
10	IFG5	A2A1 J1-12	F
11	B3	A2A1J1-11	NOT USED
12	IFG 4	A2A1 J1-10	F
13	FULL	A2A1 J1-13	B
14	IFG 3	A2A1 J1-14	F
15	B2	A2A1J1-15	NOT USED
16	IFG 2	A2A1 J1-16	F
17	B1	A2A1J1-17	NOT USED
18	IFG1	A2A1 J1-8	F
19	MAN SWP	A29 J1-19	A
20	FSX2.5	A2A1 J1-20	B
21	2ØA2	A2A1 J1-21	D
22	FS÷2	A2A1 J1-22	B
23	2ØA3	A2A1J1-23	D
24	FS÷4	A2A1 J1-24	B
25	ØA3	A2A1J1-25	NOT USED
26	FS÷10	A2A1 J1-26	B
27	1ØA1	A2A1 J1-27	D
28	FS÷100	A2A1 J1-28	B
29	ØA2	A2A1J1-29	NOT USED
30	FSK	A2A1 J1-30	K
31	ØA1	A2A1J1-31	NOT USED
32	FSM	A2A1 J1-32	K
33	+26V RETURN	A40A2J2-3 (1)	NOT USED
34	+26V UNREG	A40A2J2-1 (908)	NOT USED
35	−15V	A40A2J2-15 (97)	K
36	2ØA4	A2A1J1-36	D
37	2dB/DIV	A2A1 J1-37	E
38	+15V	A40A2J2-11 (92)	K
39	5dB/DIV	A2A1 J1-39	E
40	ØA4	A2A1J1-40	NOT USED
41	10dB/DIV	A2A1 J1-41	E
42	NC		
43	NC		
44	NC		
45	BW Ø	A2A1 J1-45	J
46	NC		
47	BW 4	A2A1 J1-47	J
48	ST FAST	A2A1 J1-48	A
49	LOG/LIN	A2A1 J1-49	E
50	ST CAL	A2A1 J1-50	A

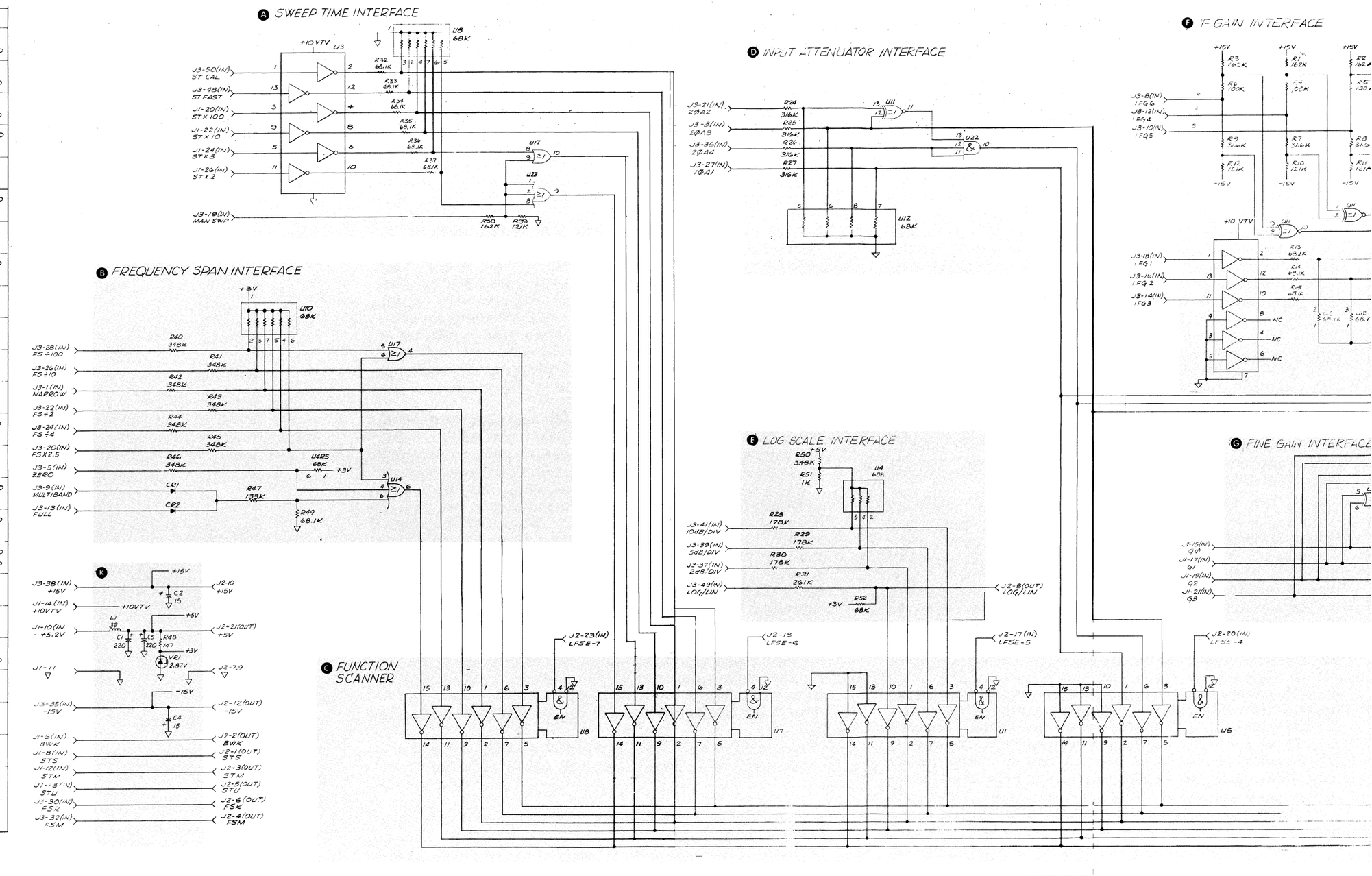

Scans by => ARTEK MEDIA © 2003-2005

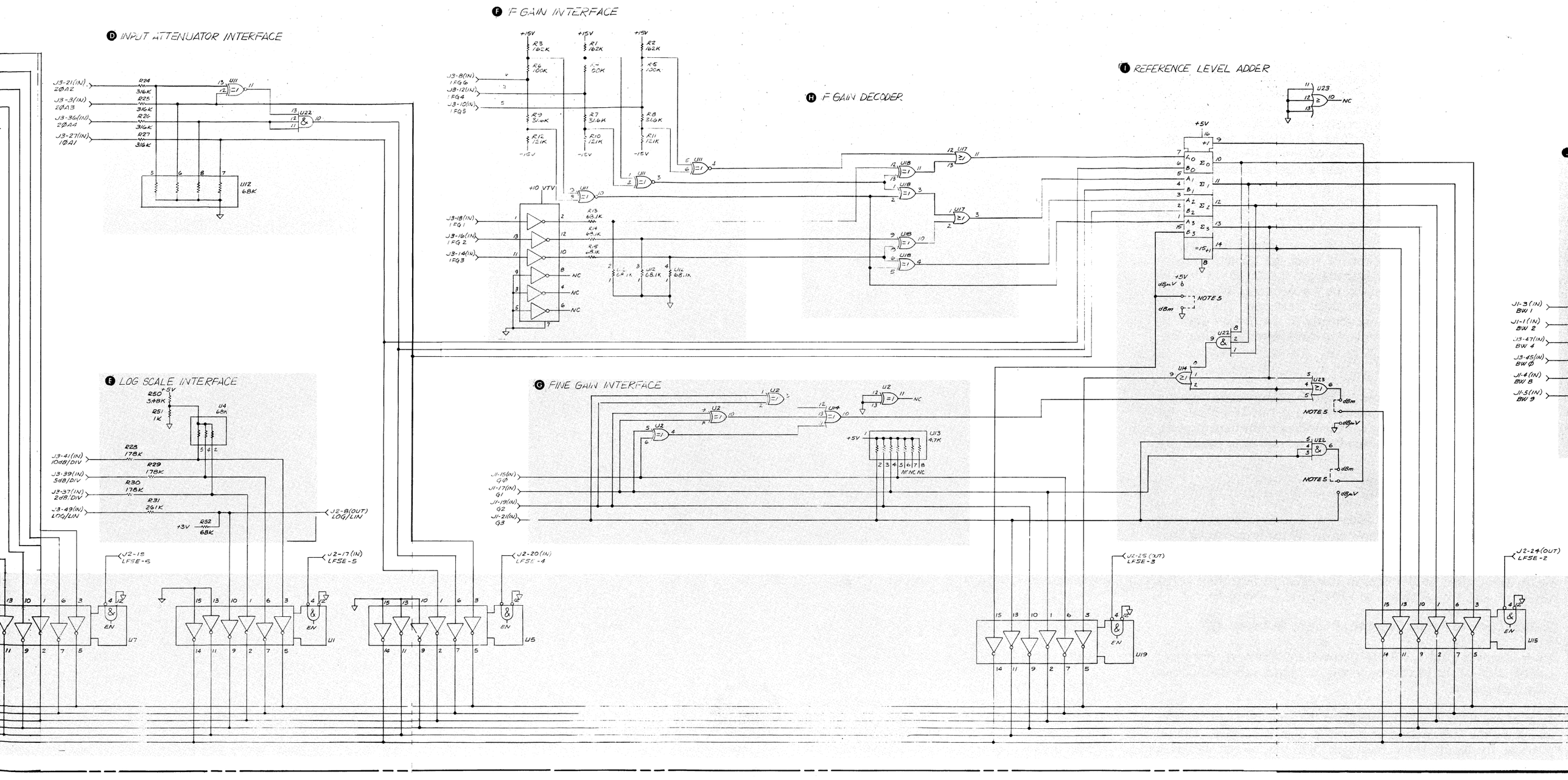

Scans by => ARTEK MEDIA © 2003-2005

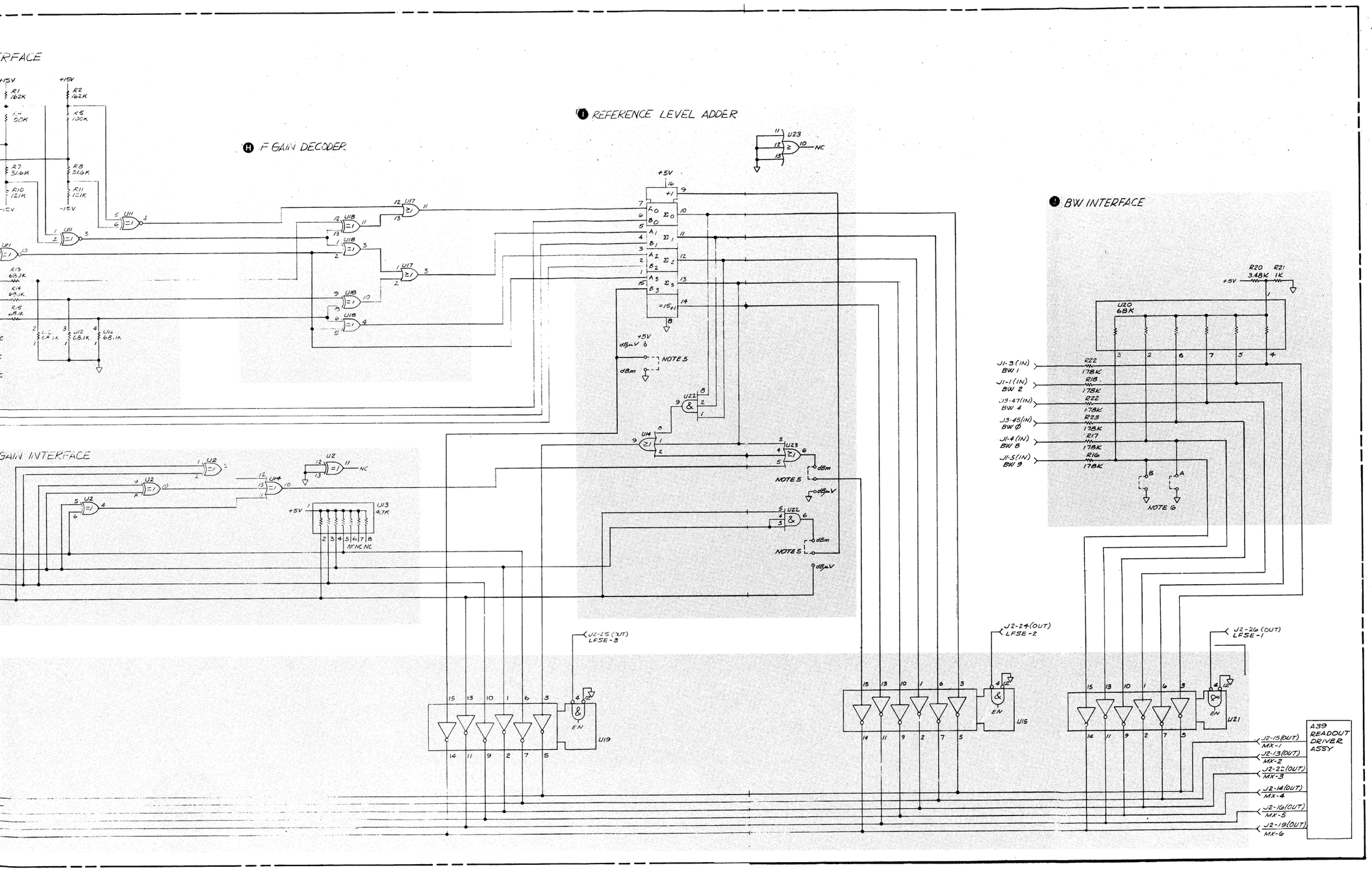

NOTES

1. REFERENCE DESIGNATORS WITHIN THIS ASSEMBLY ARE ABBREVIATED. FOR COMPLETE DESIGNATOR PREFIX WITH ASSEMBLY REFERENCE DESIGNATOR.
2. UNLESS OTHERWISE INDICATED:
   RESISTANCE IN OHMS (Ω)
   CAPACITANCE IN MICROFARADS (μF)
3. ALL IC'S HAVE THE FOLLOWING +5V AND GROUND CONNECTIONS:

IC PKG	+5V	GND
14 PIN	PIN 14	PIN 7
16 PIN	PIN 16	PIN 8

4. ALL INPUTS ARE FROM A2 FRONT PANEL ASSEMBLY.
5. WIRE JUMPERS SHOWN ARE FOR STANDARD (dBm) INSTRUMENT. FOR OPTION 200 (dBμV) THE THREE JUMPERS ARE SWITCHED TO THE dBμV POSITION.
6. FOR NORMAL OPERATION POINTS A & B ARE TIED TO GROUND (TO BE USED FOR FUTURE OPTIONS).
7. REFERENCE DESIGNATORS

A38	
LAST USED	NOT USED
C5 J3 L1 R50 U23 VR1	C3

34
A38

Figure 8-97. A38 Readout Input Assembly, Schematic Diagram (2 of 2)

Scans by => ARTEK MEDIA © 2003-2005

SERVICE SHEET 35

A39 READOUT DRIVER ASSEMBLY, CIRCUIT DESCRIPTION

The function of the Readout Driver Assembly is to provide drive for the Bezel Display Assembly. There are three distinct groups of drivers on the board. The first accepts information about front-panel control settings and drives the corresponding 16 digits (see Readout Input Assembly). The second accepts information about the center frequency and drives the six center frequency digits. The third provides dc for annunciators. Annunciators that are switched get their information directly from the relevant controls and require only voltage level shifting. All levels in the assembly are assumed to be TTL levels unless otherwise specified; i.e., a low is between GND and +0.8V, and a high is between +2.4V and +5V.

Four-Bit Digit Counter (F)

U2 is a four-bit ripple counter that continually counts from 0 to 15 in binary form. The clock is derived from the Display Scanner Oscillator in the DVM Digital Assembly, so that the DVM display and the 16-digit bezel display will be synchronous. The counter advances on every negative-going clock transition. The four-bit output from the counter is sent directly to the Switch Code to Seven Segment Display Decoder and to the Sixteen Digit Decoder.

Sixteen Digit Decoder (G)

The Sixteen Digit Decoder takes the four-bit binary code from the Four-Bit Digit Counter and converts it to a 1-of-16 output. All outputs are high except the one corresponding to the binary count, which is low. Each output is numbered according to the binary number it represents.

Seven Function Decoder (H)

The Seven Function Decoder takes the 16 lines from the Sixteen Digit Decoder and generates a low on one of the seven output lines to indicate the function to which each group of digits is related. Thus, for the first three clock cycles, digits 0, 1, and 2 are enabled sequentially, while LFSE1 remains low. For the next three cycles digits 3, 4, and 5 are enabled and LFSE2 is low, and so on.

Switch Code to Seven Segment Display Decoder (J)

U6 is simply a 1024 x 8 ROM (Read Only Memory). For every combination of the 10 address inputs, a unique 8-bit data output code is generated.

Four of the address inputs come from the Four-Bit Digit Counter and carry the information as to which digit is enabled. The remaining six inputs come from the MX bus, which carries a modified switch code pertaining to the enabled digit. The switch code that is present on the MX bus has been dictated by the Seven Function Decoder.

These 10 unique inputs cause the ROM to generate the 8-bit data output to light the segments depicting the numbers corresponding to the front-panel switch settings. A low output will cause a segment to be lit. Unused input combinations generate all highs to blank the display.

Seven-Segment Driver (K)

The seven-segment displays in the Bezel Display Assembly are of the common-cathode type. This means that a current must be sourced to each of the segment LEDs to have them lit. This current is provided by the seven transistors of U22 and by Q7, which are all connected in an emitter-follower configution. Resistors R49 through R56 determine the magnitude of the current. For any given transistor, if the Driver Current Ramp (DCR) line is high (approximately +14V) and the open-collector inverter tied to its base is not conducting (the input from the ROM is low), then base current will flow through its associated base resistor and the transistor will turn on, causing the segment to be lit. The output levels on lines BDa through BDg and BDdp will then be slightly less than +5V. When the ROM changes state on the negative-going clock transition, DCR will be low (approximately GND), and all segment drivers will be off. Just before a change of state, DCR will ramp down from high to low, gradually turning the segment drivers off. Just after a change of state, DCR will ramp up from a low to high and gradually turn the segment drivers on. In this way the relatively large currents involved in the display will have controlled rise and fall times and will not generate the electrical interference usually associated with strobed digital displays.

Drive Current Ramp Generator (E)

The Drive Current Ramp Generator generates the drive current ramp signal DCR which controls the rise and fall times of the Seven Segment Driver and the Center Frequency Driver. This TTL input goes through resistors R42, R43, and R44 to generate roughly a ±1 mA current at the base of Q5. Since Q5 is connected as an integrator, this current will approximately equal the charging current for C2, generating nominal rise and fall times of about 50μsec at the collector of Q5. The output drive capability is increasd by Q6, which acts as an emitter follower and has an output swing from GND to approximately +0.4V. C3 and R47 at the collector of Q6 prevent the ramp current from getting on the +15V power supply line. The output is of opposite polarity from the input and is delayed by the ramp rise and fall times.

Duty Cycle Brightness Control (D)

The Duty Cycle Brightness Control is a TTL "one-shot" that controls the percentage of time that the seven-segment drivers are on during the allotted digit time slot. The CK input to pin 9, U10C prevents the "on" time from exceeding 75 percent, while the one-shot output appearing on pin 8, U10C allows the "on" time to be decreased to approximately 5 percent. This time is controlled by C4, R40, and R41. The output of U10C goes to the Drive Current Ramp Generator.

Scans by => ARTEK MEDIA © 2003-2005

These 10 unique inputs cause the ROM to generate the 8-bit data output to light the segments depicting the numbers corresponding to the front-panel switch settings. A low output will cause a segment to be lit. Unused input combinations generate all highs to blank the display.

Seven-Segment Driver (K)

The seven-segment displays in the Bezel Display Assembly are of the common-cathode type. This means that a current must be sourced to each of the segment LEDs to have them lit. This current is provided by the seven transistors of U22 and by Q7, which are all connected in an emitter-follower configution. Resistors R49 through R56 determine the magnitude of the current. For any given transistor, if the Driver Current Ramp (DCR) line is high (approximately +14V) and the open-collector inverter tied to its base is not conducting (the input from the ROM is low), then base current will flow through its associated base resistor and the transistor will turn on, causing the segment to be lit. The output levels on lines BDa through BDg and BDdp will then be slightly less than +5V. When the ROM changes state on the negative-going clock transition, DCR will be low (approximately GND), and all segment drivers will be off. Just before a change of state, DCR will ramp down from high to low, gradually turning the segment drivers off. Just after a change of state, DCR will ramp up from a low to high and gradually turn the segment drivers on. In this way the relatively large currents involved in the display will have controlled rise and fall times and will not generate the electrical interference usually associated with strobed digital displays.

Drive Current Ramp Generator (E)

The Drive Current Ramp Generator generates the drive current ramp signal DCR which controls the rise and fall times of the Seven Segment Driver and the Center Frequency Driver. This TTL input goes through resistors R42, R43, and R44 to generate roughly a ±1 mA current at the base of Q5. Since Q5 is connected as an integrator, this current will approximately equal the charging current for C2, generating nominal rise and fall times of about 50μsec at the collector of Q5. The output drive capability is increasd by Q6, which acts as an emitter follower and has an output swing from GND to approximately +0.4V. C3 and R47 at the collector of Q6 prevent the ramp current from getting on the +15V power supply line. The output is of opposite polarity from the input and is delayed by the ramp rise and fall times.

Duty Cycle Brightness Control (D)

The Duty Cycle Brightness Control is a TTL "one-shot" that controls the percentage of time that the seven-segment drivers are on during the allotted digit time slot. The CK input to pin 9, U10C prevents the "on" time from exceeding 75 percent, while the one-shot output appearing on pin 8, U10C allows the "on" time to be decreased to approximately 5 percent. This time is controlled by C4, R40, and R41. The output of U10C goes to the Drive Current Ramp Generator.

Sixteen-Digit Driver (L)

The Sixteen-Digit Driver boosts the current from the Sixteen-Digit Decoder to a level sufficient for the LED displays. Since the seven-segment displays in the Bezel Display Assembly are of the common-cathode type, this driver must sink the current from the lit segments of the driven digit. One of the 16 integrated Darlington drivers in U24 and U25 is enabled when the base is supplied current through it associated base resistor. This, in turn, requires that the open-collector inverter associated with the driver have a low input from the Sixteen Digit Decoder.

The output voltage level of the Darlingtons is not well defined. When a Darlington is off and no segments anywhere are lit by any other driver, the output will be pulled to a level near GND by the output pulldown resistor. If, however, another driver is lighting segments, the level will be between +1.5V and +2.0V on the outputs of the Darlingtons that are off. When a Darlington is on, the output level will be about +0.6V if no segment is lit, and between +1.0V and +1.5V if segments are lit, depending on the number of segments lit and individual device parameters.

Center Frequency Segment Driver (A)

The operation of the Center Frequency Segment Driver is identical to the Seven-Segment Driver except that the segment information is obtained from the DVM Digital Assembly instead of from the ROM. The same Drive Current Ramp (DCR) signal is used to control rise and fall times and "percentage on" time for both sets of drivers.

Center Frequency Digit Driver (B)

The DVM Digital Assembly generates six-digit scan lines HCF0 through HCF5, which are normally low and go high one at a time in sequence. Lines HCF1, HCF2, HCF4, and HCF5 are used directly by the Center Frequency Digit Driver as inputs to the four associated Darlingtons, which drive the two leftmost and two rightmost digits, much as in the Sixteen-Digit Driver.

Since the bezel display uses an entire digit for the decimal point (as opposed to the FREQUENCY GHz readout, which uses numeric displays with right-hand decimal points), the Center Frequency Digit Driver must blank one of the two center digits and supply it with decimal point information only. The time slot allotted for the center digit occurs when LCF3 is low, the time slot allotted for the decimal point occurs when LCFO is low, and the dpC line is low if the decimal point is to occur in the leftmost of the two center digits. U10B, U21A, U21B, U21C, and U21D decode this information from the DVM Digital Assembly and steer the middle digit and decimal point to the proper Darlington. The rules governing the levels of the Darlington for the Center Frequency Driver are identical to those for the Sixteen-Digit Driver.

Annunciator Drivers (C)

The Annunciator Drivers provide the dc for the annunciators that display the units of measure for the 16 bezel digits.

There are five annunciators, comprising a total of 12 subminiature LED lamps, which remain on constantly. These are broken into three groups of four LEDs each, the four being arranged in a series string. The current for the three strings is provided by three current sources, Q1, Q2, and Q3. R5, CR1, and R1 provide a fixed, temperature-compensated voltage for the bases of Q1, Q2, and Q3, while R2, R3, and R4 determine the magnitude of the current. Q1 supplies the current to light GHz and Hz/, Q2 supplies current to light dB ATTN, and Q3 supplies current to light Hz and dB.

The two lamps in series for the SEC/annunciator are lit by Q8, which generates a fixed current when either STU, STM, or STS is switched to GND. (These correspond to Sweep Time Microseconds, Sweeptime Milliseconds, and Sweep Time Seconds.) The magnitude of the current is determined by R6, R8, and R10. R11 insures that Q8 will be turned off when none of the inputs is low (AUTO). In addition, when STM is switched to GND, current flows through R7 and lights the "m" in front of SEC/, and when STU is switched to GND, current flows through R9 and lights the "μ" in front of SEC/.

All other annunciators are driven by the transistor array U19. When FSM (Frequency Span Megahertz) is switched to +15V, R24 supplies base current to the associated transistor and turns it on. This causes a fixed current, determined by R16, to light the "M" in front of Hz/. Likewise, when FSK (Frequency Span Kilohertz) is switched to +15V, a current (determined by R15) flows and lights the "k" in front of Hz/. When BWK (Bandwidth Kilohertz) is switched to +15V, current flows through R17 to light the "k" in front of Hz. When BWK is left open, its associated transistor is turned off, allowing current to flow through R19, R17, and R26, turning on the transistor whose base is tied to R26, causing a fixed current to flow through R18, and lighting the "M" in front of Hz. Similarly, when the LOG/LIN line is high the transistor associated with it turns on, pulled a fixed current through R14 to light dB/. When the LOG/LIN line is low current flows through R12, R14, and R20 to turn on the transistor whose base is tied to R20, causing a fixed current to flow through R13, lighting LIN.

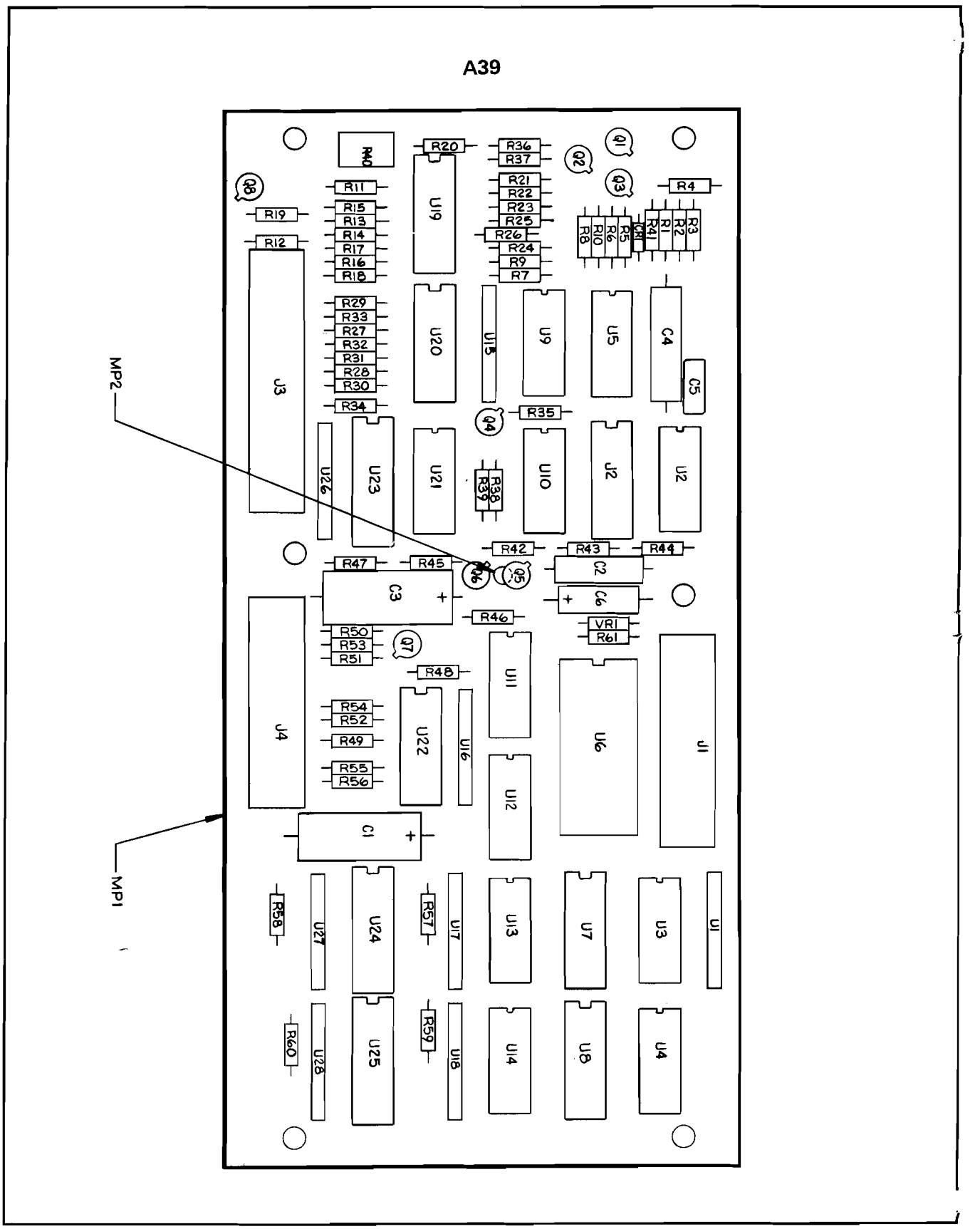

Figure 8-98. A39 Readout Driver Assembly, Component Locations

Scans by ARTEK MEDIA =>

Scans by => ARTEK MEDIA © 2003-2005

A39 READOUT DRIVER ASSEMBLY
08565-60036

P1

PIN	SIGNAL	TO/FROM	FUNCTION BLOCK
1	STS	A2A4 J1-8	
2	BWK	A2A4 J1-6	
3	STM	A2A4 J1-12	
4	FSM	A2A1 J1-32	
5	STU	A2A4 J1-13	
6	FSK	A2A1 J1-30	
7	▽	A3B J2-7	M
8	LOG/LIN	A2A1 J1-49	
9	▽	A3B J2-9	M
10	+15V	A3B J2-10	M
11	NC		
12	−15V	A3B J2-12	M
13	MX-2	A3B J2-13	J
14	MX-4	A3B J2-14	J
15	MX-1	A3B J2-15	J
16	MX-5	A3B J2-16	J
17	LFSE5	A3B J2-17	H
18	LFSE6	A3B J2-18	H
19	MX-6	A3B J2-19	J
20	LFSE4	A3B J2-20	H
21	+5V	A3B J2-21	M
22	MX-3	A3B J2-22	J
23	LFSE7	A3B J2-23	H
24	LFSE2	A3B J2-24	H
25	LFSE3	A3B J2-25	H
26	LFSE1	A3B J2-26	H

J2

PIN	SIGNAL	TO/FROM	FUNCTION BLOCK
1	CFdp	A11 J1-1	A
2	CFF	A11 J1-2	A
3	CFg	A11 J1-3	A
4	CFe	A11 J1-4	A
5	CFd	A11 J1-5	A
6	LCF3	A11 J1-6	B
7	LCF0	A11 J1-7	B
8	CFC	A11 J1-8	A
9	CFb	A11 J1-9	A
10	CFa	A11 J1-10	A
11	dpC	A11 J1-11	B
12	HCF1	A11 J1-12	B
13	HCF2	A11 J1-13	B
14	CK	A11 J1-14	D
15	HCF4	A11 J1-15	B
16	HCF5	A11 J1-16	B

P3

PIN	SIGNAL	TO/FROM	FUNCTION BLOCK
1	HZ-dB	A1A1 J1-1	C
2	dB/D	A1A1 J1-2	C
3	LIND	A1A1 J1-3	C
4	GHZ-HZ/	A1A1 J1-4	C
5	dB ATTN	A1A1 J1-5	C
6	FSMD	A1A1 J1-6	C
7	BWKD	A1A1 J1-7	C
8	FSKD	A1A1 J1-8	C
9	BWMD	A1A1 J1-9	C
10	+5V		M
11	STMD	A1A1 J1-11	C
12	STUD	A1A1 J1-12	C
13	SECD	A1A1 J1-13	C
14	NC		
15	CFBa	A1A1 J1-15	A
16	NC		
17	+15		M
18	CFBb	A1A1 J1-18	A
19	CFBd	A1A1 J1-19	A
20	CFBf	A1A1 J1-20	A
21	CFBg	A1A1 J1-21	A
22	NC		
23	CFBe	A1A1 J1-23	A
24	NC		
25	CFBC	A1A1 J1-25	A
26	NC		
27	CFB6	A1A1 J1-27	B
28	NC		
29	CFBdp	A1A1 J1-29	
30	CFB5	A1A1 J1-30	B
31	CFB3	A1A1 J1-31	B
32	CFB4	A1A1 J1-32	B
33	CFB2	A1A1 J1-33	
34	CFB1	A1A1 J1-34	B

P4

PIN	SIGNAL	TO/FROM	FUNCTION BLOCK
1	DIG 11	A1A1 J2-1	L
2	DIG 12	A1A1 J2-2	L
3	BDa	A1A1 J2-3	K
4	NC		
5	DIG 13	A1A1 J2-5	L
6	NC		
7	BDd	A1A1 J2-7	K
8	BDb	A1A1 J2-8	K
9	BDg	A1A1 J2-9	K
10	BDf	A1A1 J2-10	K
11	DIG 15	A1A1 J2-11	L
12	BDe	A1A1 J2-12	K
13	BDc	A1A1 J2-5	K
14	DIG 14	A1A1 J2-14	L
15	DIG 3	A1A1 J2-11	L
16	DIG 10	A1A1 J2-16	L
17	DIG 2	A1A1 J2-17	L
18	DIG 9	A1A1 J2-18	L
19	BDdp	A1A1 J2-19	K
20	DIG 8	A1A1 J2-20	L
21	DIG 4	A1A1 J2-21	L
22	DIG 7	A1A1 J2-22	L
23	DIG 1	A1A1 J2-23	L
24	DIG 6	A1A1 J2-24	L
25	DIG Ø	A1A1 J2-25	L
26	DIG 5	A1A1 J2-26	L

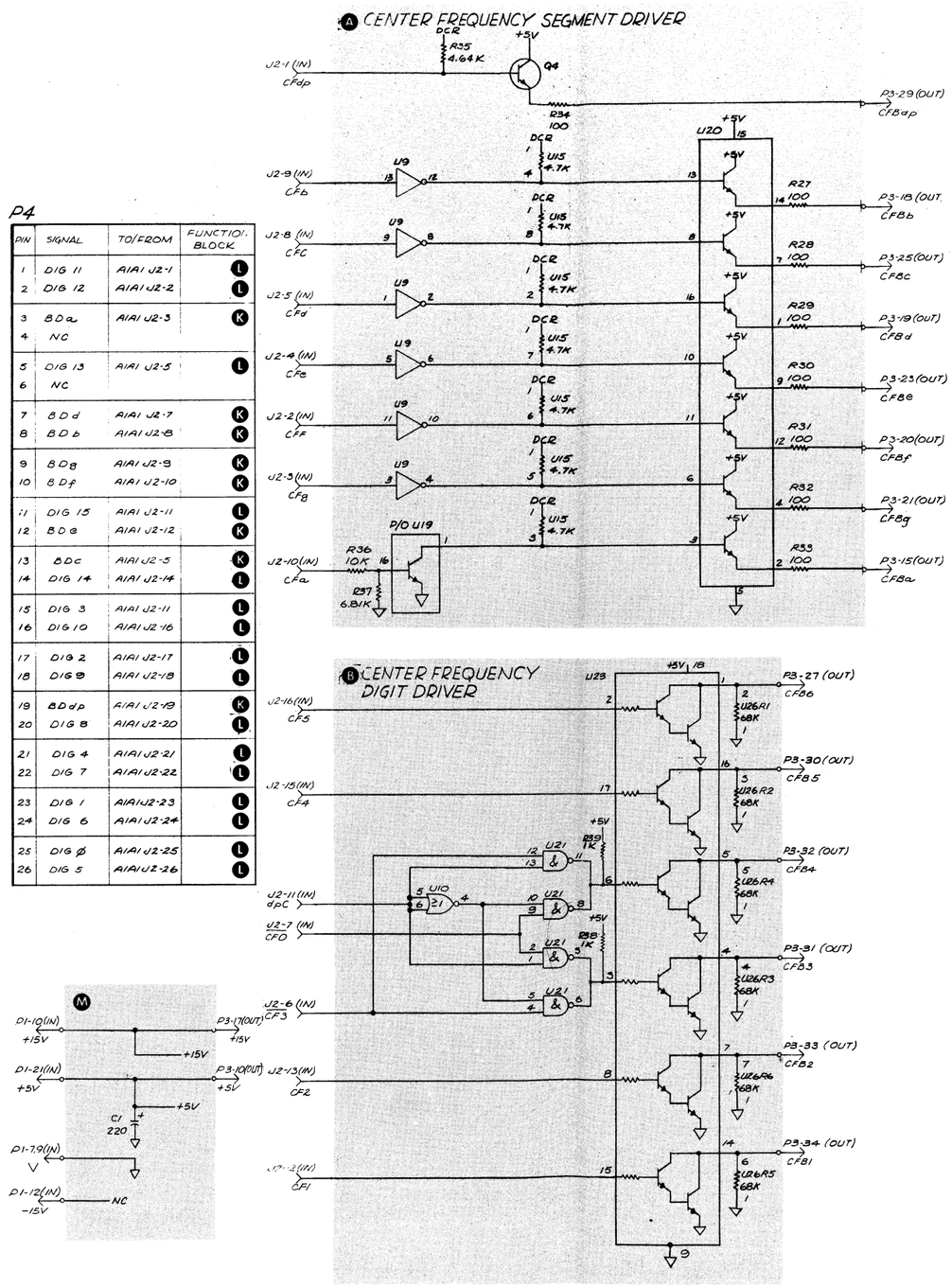

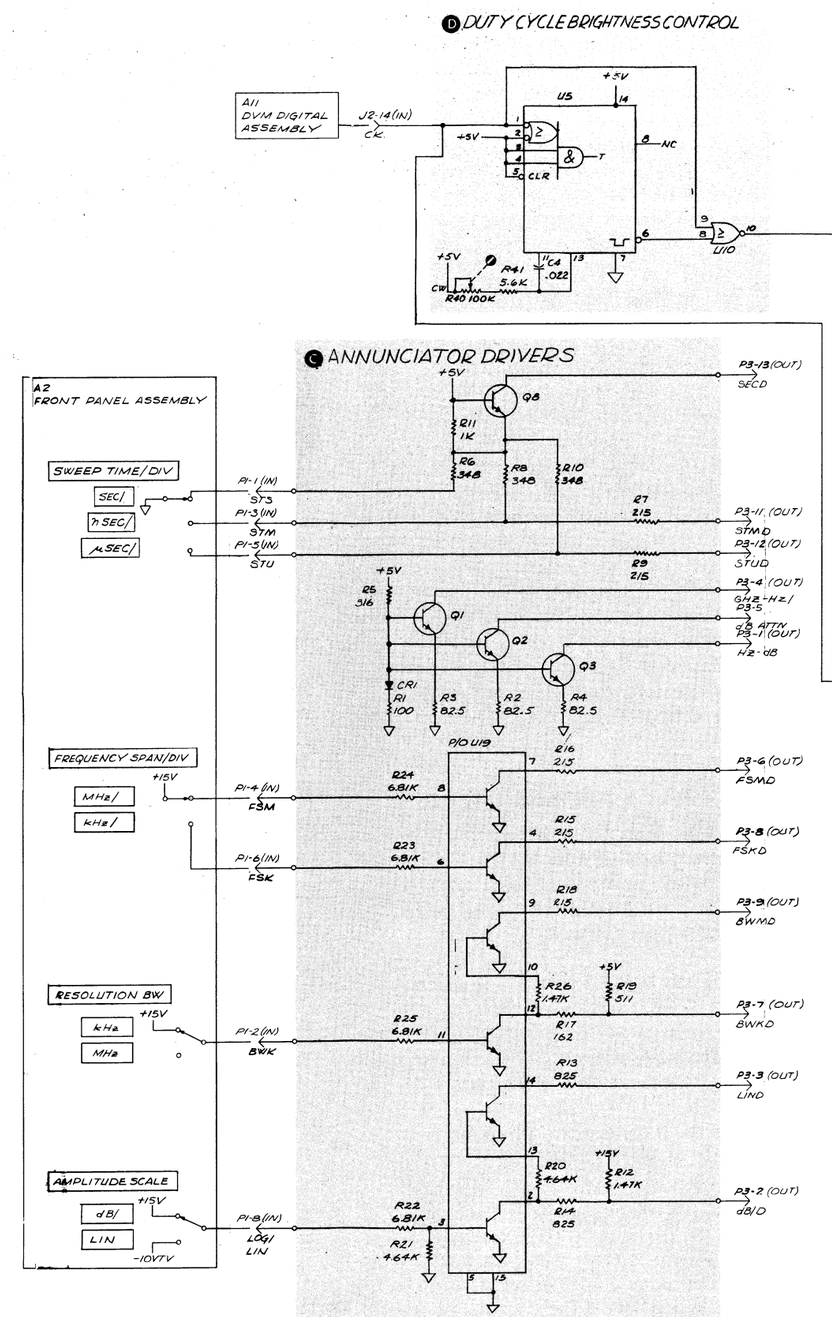

Scans by => ARTEK MEDIA © 2003-2005

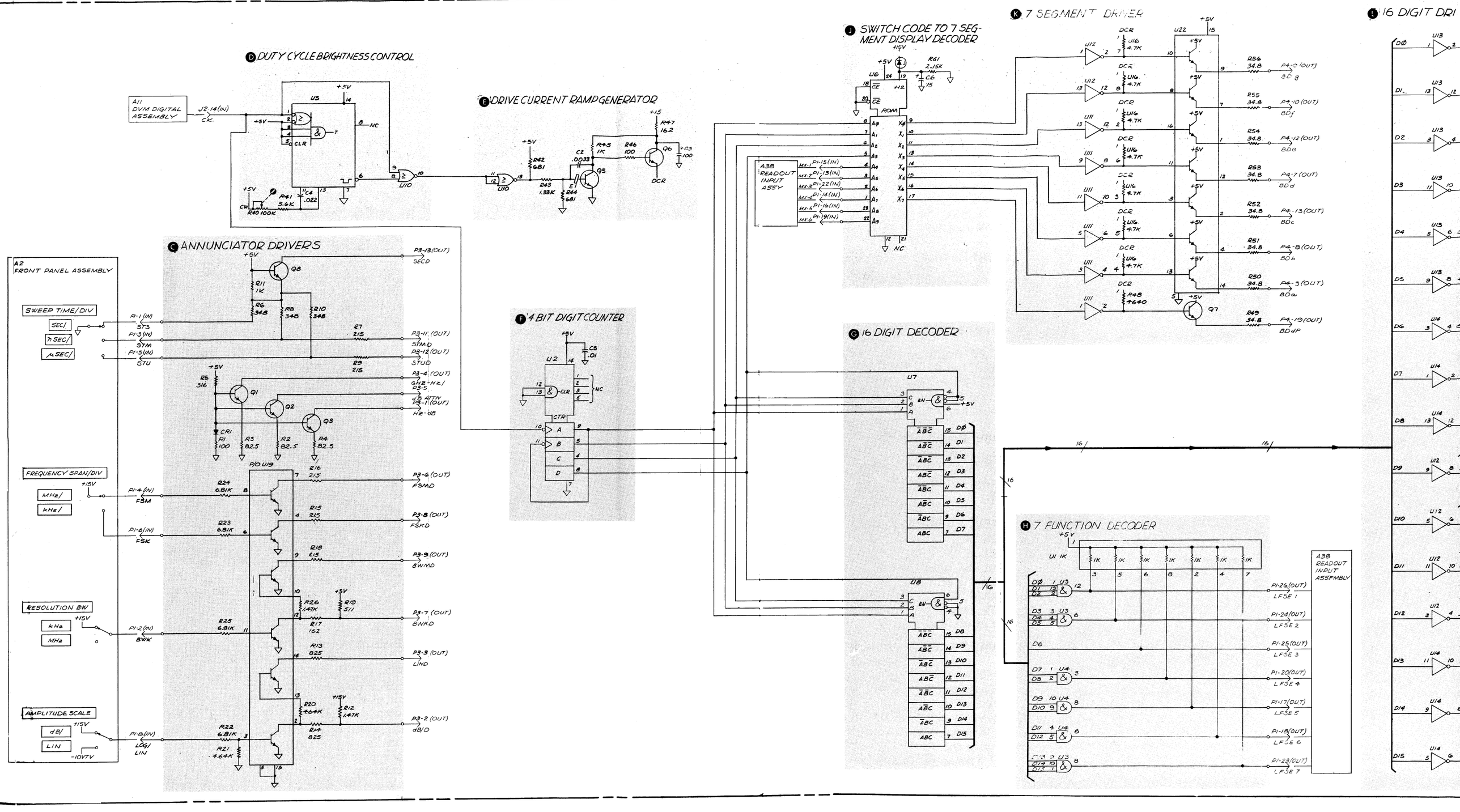

Scans by => ARTEK MEDIA © 2003-2005

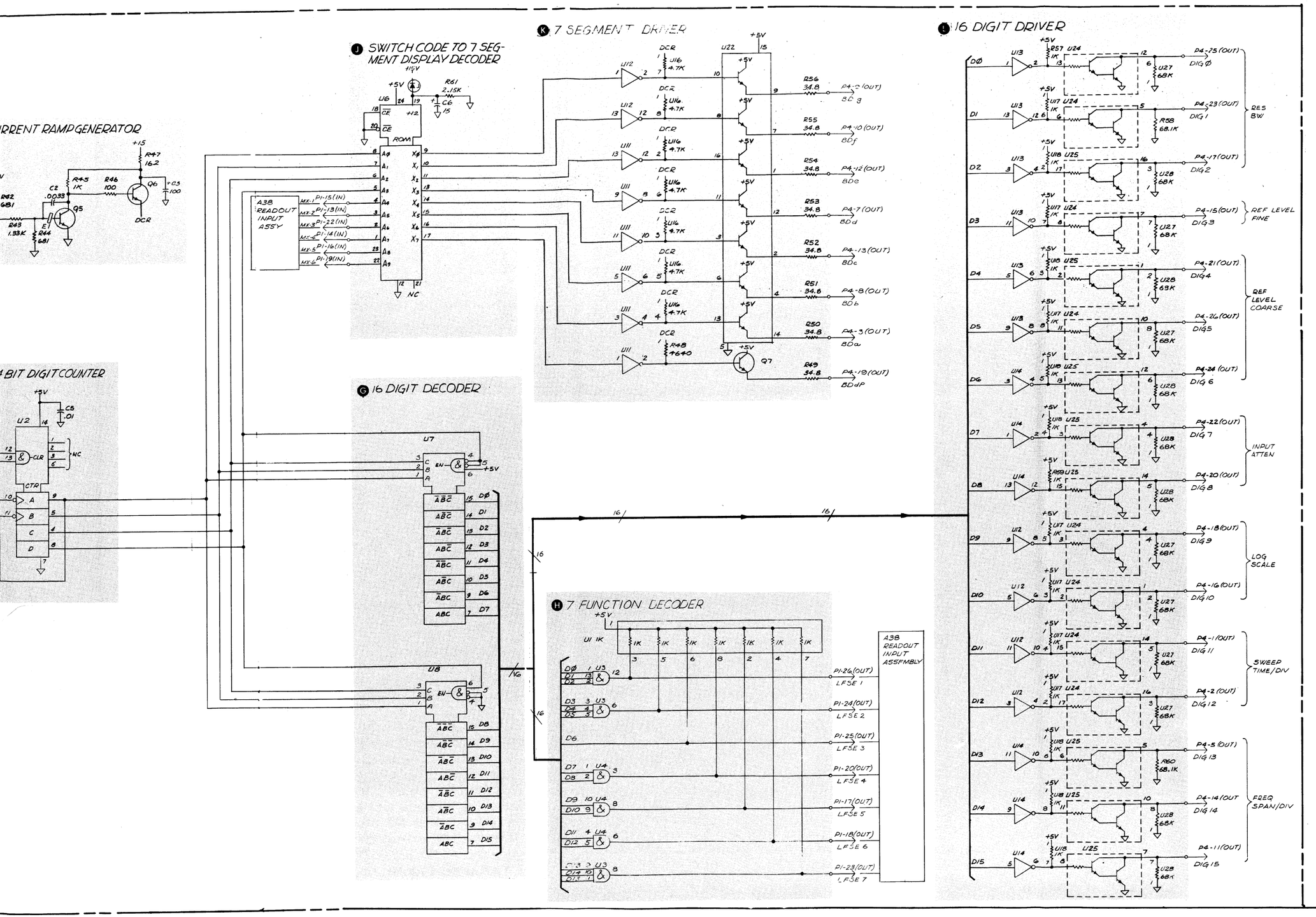

NOTES

1. REFERENCE DESIGNATORS WITHIN THIS ASSEMBLY ARE ABBREVIATED. FOR COMPLETE DESIGNATOR PREFIX WITH ASSEMBLY REFERENCE DESIGNATOR.
2. UNLESS OTHERWISE INDICATED:
   RESISTANCE IN OHMS (Ω)
   CAPACITANCE IN MICROFARADS (μF)
   INDUCTANCE IN MICROHENRIES (μH)
3. UNLESS OTHERWISE NOTED:
   DIP I.C.'S HAVE +5V OR GND AS FOLLOWS

I.C. PKG	+5V	GND
14 PIN	PIN 14	PIN 7
16 PIN	PIN 16	PIN 8
18 PIN	PIN 18	PIN 9

4. ALL OUTPUTS GO TO A1A1 BEZEL DISPLAY ASSEMBLY UNLESS OTHERWISE INDICATED.
   ALL INPUTS COME FROM A11 DVM DIGITAL ASSY UNLESS OTHERWISE INDICATED.
5. MNEMONICS

BDa THRU BDg	BEZEL SEGMENT DRIVERS
BDdP	BEZEL DECIMAL POINT DRIVER
BWK	BANDWIDTH KILOHERTZ ENABLE
BWKD	BANDWIDTH KILOHERTZ ANNUNCIATOR DRIVER
BWMD	BANDWIDTH MEGAHERTZ ANNUNCIATOR DRIVER
CF1,2,4,5	CENTER FREQUENCY DIGIT ENABLES
CFØ, CF3	CENTER FREQUENCY DIGIT ENABLES INVERTED
CFa THRU CFg	CENTER FREQUENCY SEGMENT ENABLES
CFdp	CENTER FREQUENCY DECIMAL POINT ENABLE
CFBa THRU CFBg	CENTER FREQUENCY BEZEL SEGMENT DRIVERS
CFBdP	CENTER FREQUENCY BEZEL DECIMAL POINT DRIVER
CFB1 THRU 6	CENTER FREQUENCY BEZEL DIGIT DRIVERS
DØ THRU DIG15	BEZEL DIGIT ENABLES
DIGØ THRU DIG15	BEZEL DIGIT DRIVERS
dB ATTN	dB ATTEN ANNUNCIATOR DRIVER
dB/D	LOG (dB/) SCALE ANNUNCIATOR DRIVER
dpC	CENTER FREQUENCY DECIMAL POINT CONTROL
LFSE1 THRU LFSE7	FUNCTION SCANNER ENABLES
FSK	FREQUENCY SPAN KILOHERTZ ENABLE
FSKD	FREQUENCY SPAN KILOHERTZ ANNUNCIATOR DRIVER
FSM	FREQUENCY SPAN MEGAHERTZ ENABLE
FSMD	FREQUENCY SPAN MEGAHERTZ ANNUNCIATOR DRIVER
GHz-Hz/	GHz-Hz/ ANNUNCIATOR DRIVER
Hz-dB	Hz-dB ANNUNCIATOR DRIVER
LIND	LIN ANNUNCIATOR DRIVER
LOG/LIN	LOG/LIN SCALE ENABLE
SECD	SEC ANNUNCIATOR DRIVER
STM	SWEEP TIME MILLISECONDS ENABLE
STMD	SWEEP TIME MILLISECONDS ANNUNCIATOR DRIVER
STU	SWEEP TIME MICROSECONDS ENABLE
STUD	SWEEP TIME MICROSECONDS ANNUNCIATOR DRIVER
ST3	SWEEP TIME SECONDS ENABLE
MX1 THRU MX6	MULTIPLEXED SCANNER OUTPUT
DCR	DRIVE CURRENT RAMP SIGNAL
CK	CLOCK FOR DIGIT STROBING

6. REFERENCE DESIGNATORS

A39	
LAST USED	NOT USED
C6	
CR1	
Q8	
R61	
U28	
VR1	

35
A39

Figure 8-99. A39 Readout Driver Assembly, Schematic Diagram

Scans by => ARTEK MEDIA © 2003-2005

SERVICE SHEET 36

A40 POWER SUPPLY ASSEMBLY, CIRCUIT DESCRIPTION

The Power Supply Assembly is made up of two subassemblies: A40A1 Rectifier Assembly and A40A2 Regulator Assembly. The Rectifier Assembly converts the voltages from the transformer secondary to unregulated voltages. These unregulated voltges are then regulated and distributed to the rest of the instrument by the Regulator Assembly.

There are nine regulated voltages (+5.2V, ±10V, ±15V, +20V, +30V, −40V, +158V) and one unregulated voltage (+26V UNREG). The regulated voltages are referenced to a +15V reference supply. The Rectifier Assembly contains the rectifiers for the +5.2V, ±15V, +20V, and −40V supplies. The +30V and +158V rectifiers are located in the Regulator Assembly.The ±10V supplies are derived from the regulated ±15V supplies.

A40A1 Rectifier Assembly

The Rectifier Assembly receives its line voltage from the Line Module Assembly FL1 through the Line Voltage Selector Card TB1 and Transformer T1. (See Figure 8-103.) C1, C2, and C3 reduce conducted RF1.

+5.2V Rectifier (A) .The +5.2V Rectifier is a center-tapped, full-wave rectifier consisting of CR1 and CR2. Filtering is by C7. R1 acts as a bleeder resistor for C7 when the supply is shut off. C6 filters the diode switching transients, and C1 and C17 reduce the conducted RFI.

+15V Rectifier (B) . The +15V rectifier is a full-wave bridge rectifier made up of CR3, CR4, CR5, and CR6. The ac ripple is filtered by C9, and the switching transients, by C8. R2 is the bleeder resistor for C9, and C2 is used to reduce the conducted RFI.

−15V, +20V, and −40V Rectifiers (C) (D) (E) . The −15V, +20V, and −40V rectifiers are similar to the +15V rectifiers. In addition, the −40V rectifier has overvoltage protection which will short the transformer and blow the line fuse whenever the line voltage is above the line module setting. For example, if the line module is set for +120V and the instrument is plugged into a 240V outlet, VR1 will begin to conduct and turn on Q1. This will short the transformer secondary and blow the line fuse.

A40A2 Regulator Assembly

+15V Reference Supply (B) . The +15V reference voltage is derived from the +6.2V reference zener diode VR3. This voltage is filtered by R15 and C18 and then amplified by U4 to +15V. The +15V output is fed back and applied to the inverting input of U4 through the voltage divider R16, R17, and R18. R17 adjusts the gain for +15V ± 0.005V out. C2 decreases the gain to unity at line frequencies for less ripple.

When first turned on, the output voltage of some op amps will rise with their positive supply voltages before beginning to regulate. This can cause the reference voltage to rise above +15V, which would trigger the overvoltage protection of the supplies, causing them to crowbar their outputs. To prevent this, VR2 is used to supply positive feedback, which brings U4 into regulation before the output voltage reaches +15V. R14 supplies bias current to VR3, and R85 increases the available output current.

+5.2V Supply (H) . There are four main elements to the supply: The error amplifier U1, R54, and R55; the series regulator Q1; the current limit R56, R57, R58, and Q11; and the overvoltage protection VR11, R60, and Q10. U1 compares the output (regulated) voltage +5.2V with the reference voltage +5.2V (derived from the +15V REF through the resistor divider R54 and R55) and applies base drive to the series pass transistor Q1 to regulate the output voltage.

The current limit is set by the voltage developed across R56 by the output current. As the output current increases, the voltage drop across R56 increases, which raises the voltage at the base of Q1. This also raises the voltage at the base of Q11 through the resistor divider R57 and R58. As the output current increases, Q11 begins to turn on and shunt the base drive of Q1 to the output. This starves the series regulator Q1, which lowers the output voltage and limits the output current.

Overvoltage protection is enabled whenever the output voltage is high enough to forward bias VR11. This turns on the SCR Q10, which shunts the output and causes the supply to current limit. C11 lowers the ac output impedance to prevent oscillation, and CR27 protects the Q1 base-to-emitter junction from reverse breakdown. The LED DS6 is biased by R59 and turns on when the power supply is on.

+10V, −10V, +15V, −15V, +20V, +30V, and −40V Supplies (I) (J) (D) (E) (A) (G) (F). The other supplies, except for the +158V Supply, operate similarly to the +5.2V Supply. The −40V and +30V Supplies have additional circuitry limiting the voltage supplied to the error amplifiers U2 and U9 to keep from exceeding the maximum supply ratings.

The −40V unregulated voltage is too high to supply U2 directly without damaging it. Q12 is used to limit the supply current, and VR6, VR7, and VR17 limit the voltage across U2 during high-power line operation and whenever the output of the supply is shorted. R34 supplies Q2 with the base drive during startup.

In the +30V Supply, VR14 keeps the output of U9 pin 6 from going below the negative terminal (pin 4) when the output of the supply is shorted. Q27 limits the output current of U9, and VR15 limits the voltage across its supply terminals. CR44, C17, R80, C16, and C15 form the rectifier for the +30V unregulated voltage. The resistor divider, R33 and R84, samples the line voltage from the transformer secondary. This voltage is sent to the Sweep Generator Assembly when the LINE mode of the SWEEP TRIGGER is selected.

The +26V UNREG voltage is tapped off from the input to the +20V Supply.

+158V Supply (C) . The +158V supply is similar to the others except for the manner in which the error amplifier controls the series regulator.

Q31 acts as a constant current source (~5 mA) set by CR21, CR22, and R41 (see Figure 8-100). This current is either fed as base drive to the series regulator Q9 or shunted to ground by U10 through Q29. The base voltage of Q29 is fixed by the voltage divider R42 and R44. This enables U10 to control the base current to Q9 by regulating the current through Q29. CR23 helps to quickly bring U10 into regulation and to prevent the output voltage from overshooting on startup. C6, R48, C7, and C10 prevent the output voltage from overshooting and triggering the overvoltage protection circuit after the removal of a short at the output.

Q28, R47, R48, and R50 form the current limiting circuit. VR9, VR10, R52, and Q30 form the overvoltage protection. C9 filters spikes on the output. DS5 is biased on by R51 to indicate when the supply is on.

CR26, C8, R40, C21, and C22 make up the rectifier, which is similar to the other full-wave bridge rectifiers except that the four-diode bridge is one package, CR26.

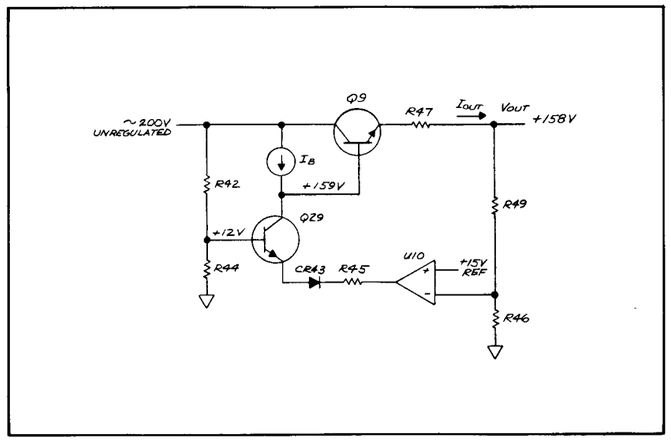

Figure 8-100. +158V Regulator Circuitry, Simplified Schematic

A39 Readout Driver Assembly
SERVICE SHEET 35

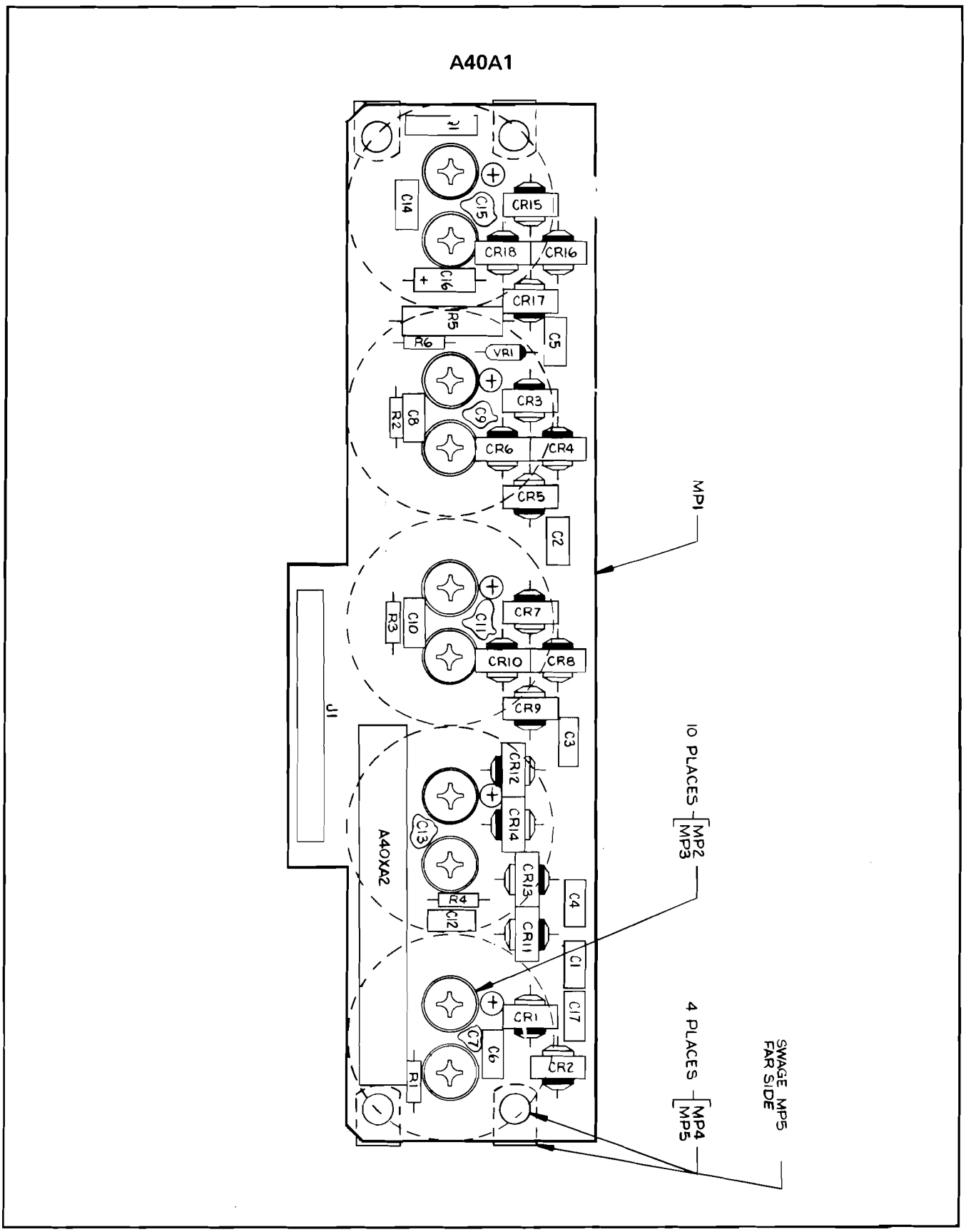

Figure 8-101. A40A1 Rectifier Assembly, Component Locations

Scans by ARTEK MEDIA =>

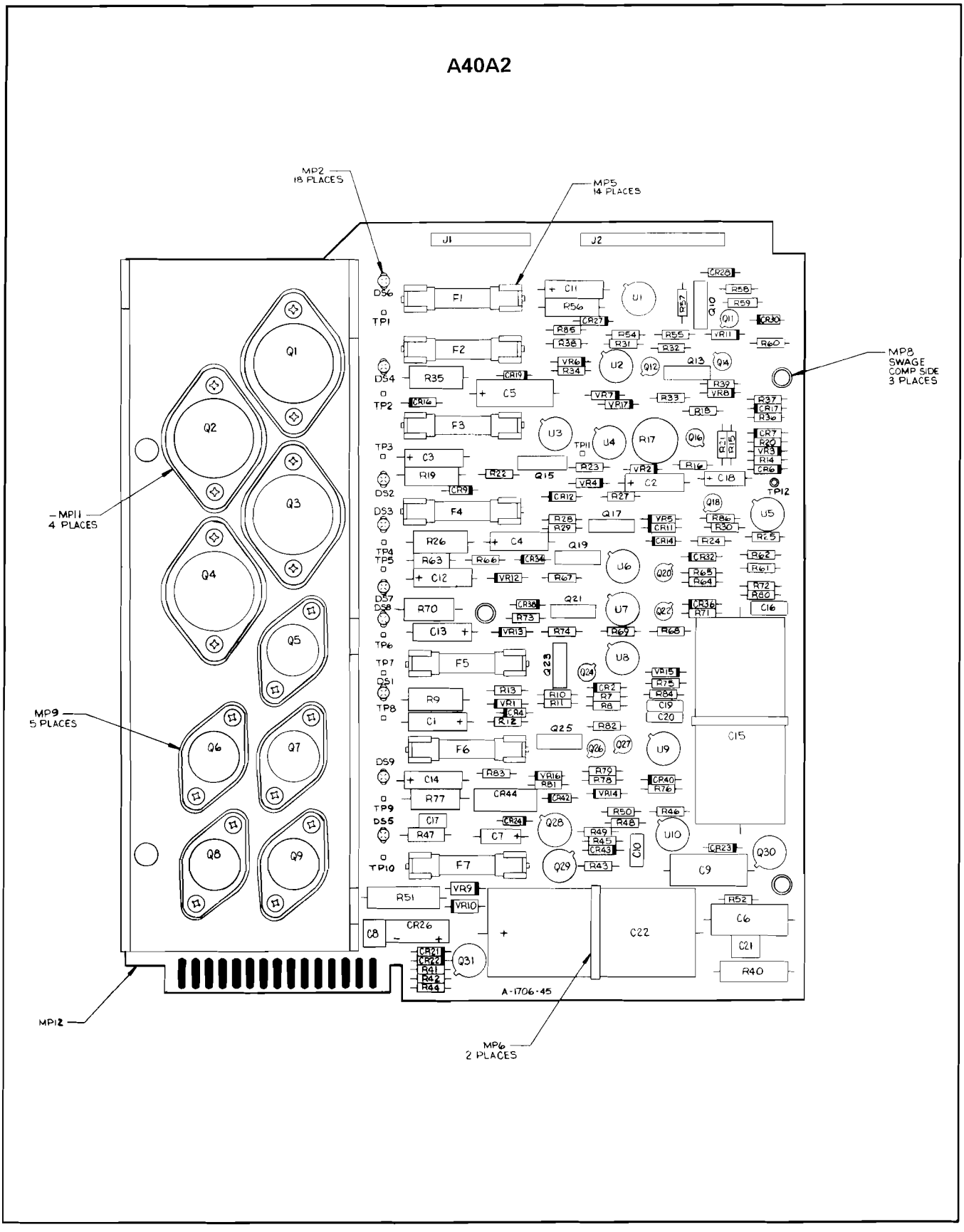

Figure 8-102. A40A2 Regulator Assembly, Component Locations

Scans by ARTEK MEDIA =>

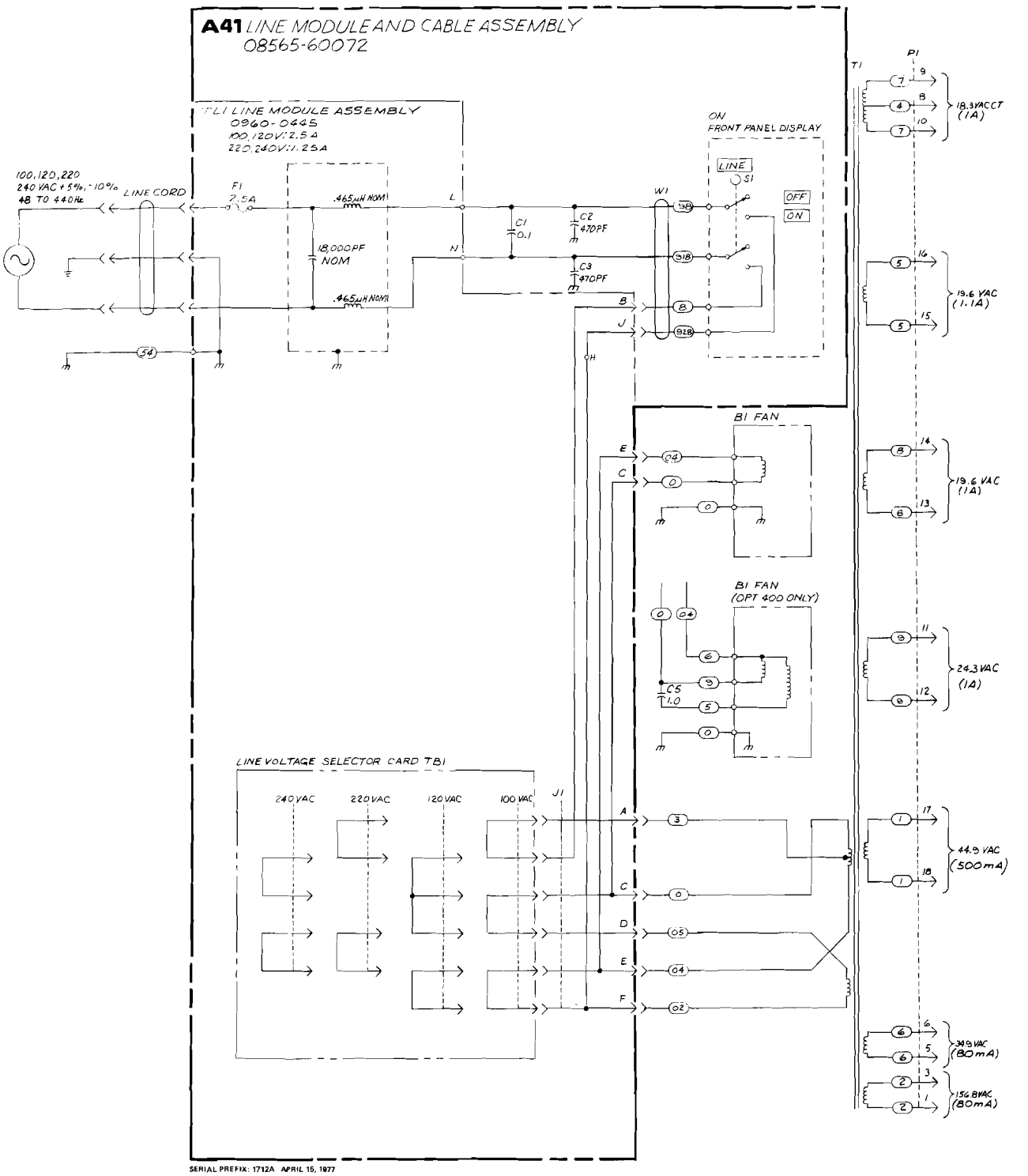

Figure 8-103. A40A1 Rectifier Assembly, A40A2 Regulator Assembly, and Power Line Module, Schematic Diagram (1 of 2)

Scans by ARTEK MEDIA =>

Scans by => ARTEK MEDIA © 2003-2005

A40 POWER SUPPLY
08565-60048

A40A1 RECTIFIER BOARD
8565-60030

J1

PIN	SIGNAL	TO/FROM	FUNCTION BLOCK
1	156.8 VAC RMS	TRANSFORMER T1	
10	18.3 VAC CT	TRANSFORMER T1	A
2			
11	24.3 VAC	TRANSFORMER T1	D
3	156.8 VAC RMS	TRANSFORMER T1	
12	24.3 VAC	TRANSFORMER T1	D
4			
13	19.6 VAC	TRANSFORMER T1	C
5	34.9 VAC RMS	TRANSFORMER T1	
14	19.6 VAC	TRANSFORMER T1	C
6	34.9 VAC RMS	TRANSFORMER T1	
15	19.6 VAC	TRANSFORMER T1	B
7			
16	19.6 VAC	TRANSFORMER T1	B
8	18.3 VAC CT	TRANSFORMER T1	A
17	44.9 VAC	TRANSFORMER T1	E
9	18.3 VAC CT	TRANSFORMER T1	A
18	44.9 VAC	TRANSFORMER T1	E

XA2

PIN	SIGNAL	TO/FROM	FUNCTION BLOCK
1	+5.2V UNREG	A40A2J1-1	A
16	+5.2V UNREG	A40A2J1-16	A
2	+5.2V UNREG	A40A2J1-2	A
17	+5.2V UNREG	A40A2J1-17	A
3	-40V UNREG	A40A2J1-3	E
18	-40V UNREG	A40A2J1-18	E
4	-40V UNREG	A40A2J1-4	E
19	-40V UNREG	A40A2J1-19	E
5	+15V UNREG	A40A2J1-5	B
20	+15V UNREG	A40A2J1-20	B
6	+15V UNREG	A40A2J1-6	B
21	+15V UNREG	A40A2J1-21	B
7	-15V UNREG	A40A2J1-7	C
22	-15V UNREG	A40A2J1-22	C
8	-15V UNREG	A40A2J1-8	C
23	-15V UNREG	A40A2J1-23	C
9	+20V UNREG	A40A2J1-9	D
24	+20V UNREG	A40A2J1-24	D
10	+20V UNREG	A40A2J1-10	D
25	+20V UNREG	A40A2J1-25	D
11	+20V UNREG	A40A2J1-11	D
26	+20V UNREG	A40A2J1-26	D
12	156.8 VAC RMS	A40A2J1-12	
27	156.8 VAC RMS	A40A2J1-27	
13	156.8 VAC RMS	A40A2J1-13	
28	156.8 VAC RMS	A40A2J1-28	
14	34.9 VAC RMS	A40A2J1-14	
29	34.9 VAC RMS	A40A2J1-29	
15	34.9 VAC RMS	A40A2J1-15	
30	34.9 VAC RMS	A40A2J1-30	

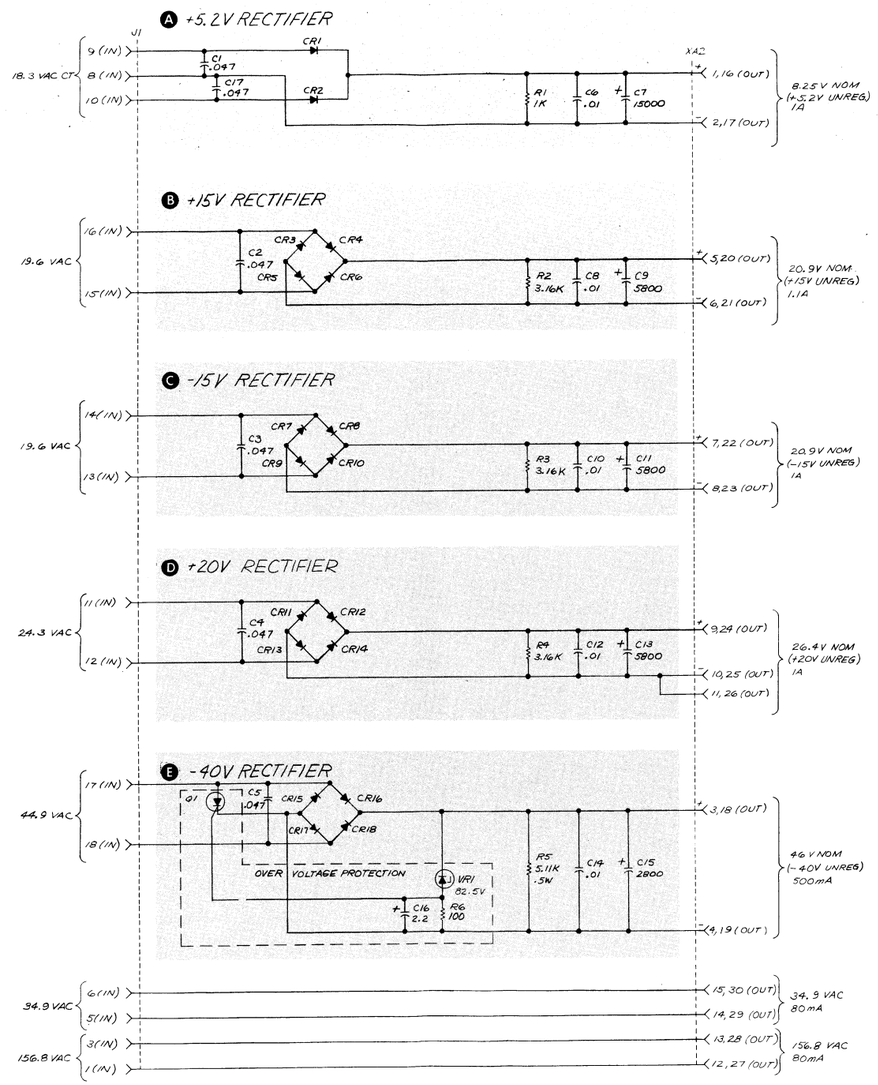

SERIAL PREFIX: 1712A APRIL 15, 1977

A40A2 REGULATOR ASSEMBLY
08565-60031

P1 FROM A40A1 RECTIFIER ASSEMBLY

PIN	SIGNAL	TO/FROM	FUNCTION BLOCK
1	+5.2V UNREG (+)	A40A1J1-1	H
16	+5.2V UNREG (+)	A40A1J1-16	H
2	+5.2V UNREG (-)	A40A1J1-2	H
17	+5.2V UNREG (-)	A40A1J1-17	H
3	-40V UNREG (+)	A40A1J1-3	F
18	-40 UNREG (+)	A40A1J1-18	F
4	-40V UNREG (-)	A40A1J1-4	F
19	-40V UNREG (-)	A40A1J1-19	F
5	+15V UNREG (+)	A40A1J1-5	D
20	+15 UNREG (+)	A40A1J1-20	D
6	+15V UNREG (-)	A40A1J1-6	D
21	+15V UNREG (-)	A40A1J1-21	D
7	-15V UNREG (+)	A40A1J1-7	E
22	-15V UNREG (+)	A40A1J1-22	E
8	-15V UNREG (-)	A40A1J1-8	E
23	-15V UNREG (+)	A40A1J1-23	E
9	+20V UNREG (+)	A40A1J1-9	A
24	+20V UNREG (+)	A40A1J1-24	A
10	+20V UNREG (-)	A40A1J1-10	A
25	+20V UNREG (-)	A40A1J1-25	A
11	+26 RETURN	A40A1J1-11	K
26	+26 RETURN	A40A1J1-26	K
12	+155VAC NOM	A40A1J1-12	C
27	+155VAC NOM	A40A1J1-27	C
13	+155VAC NOM	A40A1J1-13	C
28	+155 VAC NOM	A40A1J1-28	C
14	+34VAC NOM	A40A1J1-14	G
29	+34VAC NOM	A40A1J1-29	G
15	+34VAC NOM	A40A1J1-15	G
30	+34VAC NOM	A40A1J1-30	G

J1 TO A10 DISPLAY MOTHERBOARD

PIN	SIGNAL	TO/FROM	FUNCTION BLOCK
1	+158V	A10-3	C
2	GUIDE PIN		
3	▽		K
4	NC		
5	NC		
6	+15V	A10-92	D
7	+5.2V	A10-921	H
8	NC		
9	+26V UNREG	A10-91	A
10	-15V	A10-97	E

J2 TO A29 RF-IF MOTHERBOARD

PIN	SIGNAL	TO/FROM	FUNCTION BLOCK
1	+26V UNREG	A29-903	A
2	GUIDE PIN		
3	+26V RETURN	A29-1	K
4	LINE TRIG	A29-91	G
5	+20V	A29-2	A
6	+30V	A29-93	G
7	+15V	A29-92	D
8	-10V	A29-90	J
9	-40V	A29-1	F
10	+5.2V	A29-912	H
11	+15V	A29-92	D
12	+10V	A29-902	I
13	▽	A29-0	K
14	▽	A29-0	K
15	-15V	A29-97	F

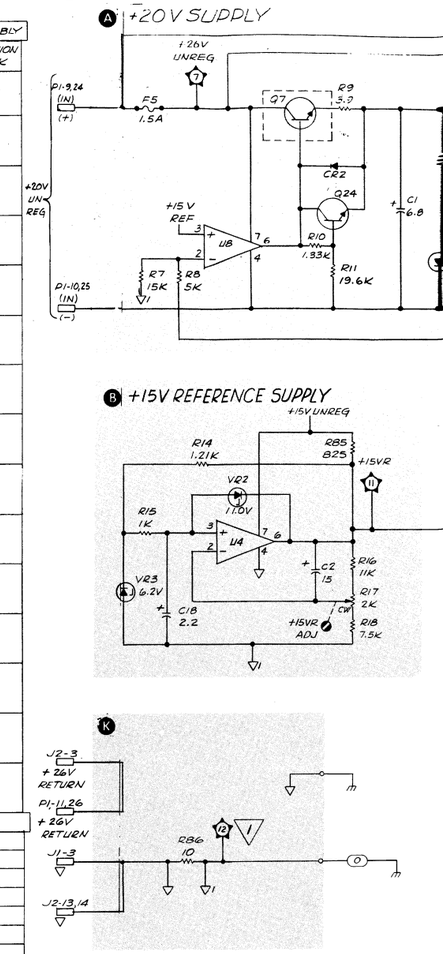

Scans by => ARTEK MEDIA © 2003-2005

A40A2 REGULATOR ASSEMBLY 08565-60031

P1	FROM A40A1 RECTIFIER ASSEMBLY		
PIN	SIGNAL	TO / FROM	FUNCTION BLOCK
1	+5.2V UNREG (+)	A40A1J1-1	H
16	+5.2V UNREG (+)	A40A1J1-16	H
2	+5.2V UNREG (−)	A40A1J1-2	H
17	+5.2V UNREG (−)	A40A1J1-17	H
3	−40V UNREG (+)	A40A1J1-3	F
18	−40V UNREG (+)	A40A1J1-18	F
4	−40V UNREG (−)	A40A1J1-4	F
19	−40V UNREG (−)	A40A1J1-19	F
5	+15V UNREG (+)	A40A1J1-5	D
20	+15V UNREG (+)	A40A1J1-20	D
6	+15V UNREG (−)	A40A1J1-6	D
21	+15V UNREG (−)	A40A1J1-21	D
7	−15V UNREG (+)	A40A1J1-7	E
22	−15V UNREG (+)	A40A1J1-22	E
8	−15V UNREG (−)	A40A1J1-8	E
23	−15V UNREG (+)	A40A1J1-23	E
9	+20V UNREG (+)	A40A1J1-9	A
24	+20V UNREG (+)	A40A1J1-24	A
10	+20V UNREG (−)	A40A1J1-10	A
25	+20V UNREG (−)	A40A1J1-25	A
11	+26 RETURN	A40A1J1-11	K
26	+26 RETURN	A40A1J1-26	K
12	+155VAC NOM	A40A1J1-12	C
27	+155VAC NOM	A40A1J1-27	C
13	+155VAC NOM	A40A1J1-13	C
28	+155 VAC NOM	A40A1J1-28	C
14	+34VAC NOM	A40A1J1-14	G
29	+34VAC NOM	A40A1J1-29	G
15	+34VAC NOM	A40A1J1-15	G
30	+34 VAC NOM	A40A1J1-30	G
J1	TO A10 DISPLAY MOTHERBOARD		
1	+15BV	A10-3	C
2	GUIDE PIN		
3	▽		K
4	NC		
5	NC		
6	+15V	A10-92	D
7	+5.2V	A10-921	H
8	NC		
9	+26V UNREG	A10-91	A
10	−15V	A10-97	E
J2	TO A29 RE-IF MOTHERBOARD		
1	+26V UNREG	A29-903	A
2	GUIDE PIN		
3	+26V RETURN	A29-1	K
4	LINE TRIG	A29-91	G
5	+20V	A29-2	A
6	+30V	A29-93	G
7	+15V	A29-92	D
8	−10V	A29-90	J
9	−40V	A29-1	F
10	+5.2V	A29-912	H
11	+15V	A29-92	D
12	+10V	A29-902	I
13	▽	A29-0	K
14	▽	A29-0	K
15	−15V	A29-97	F

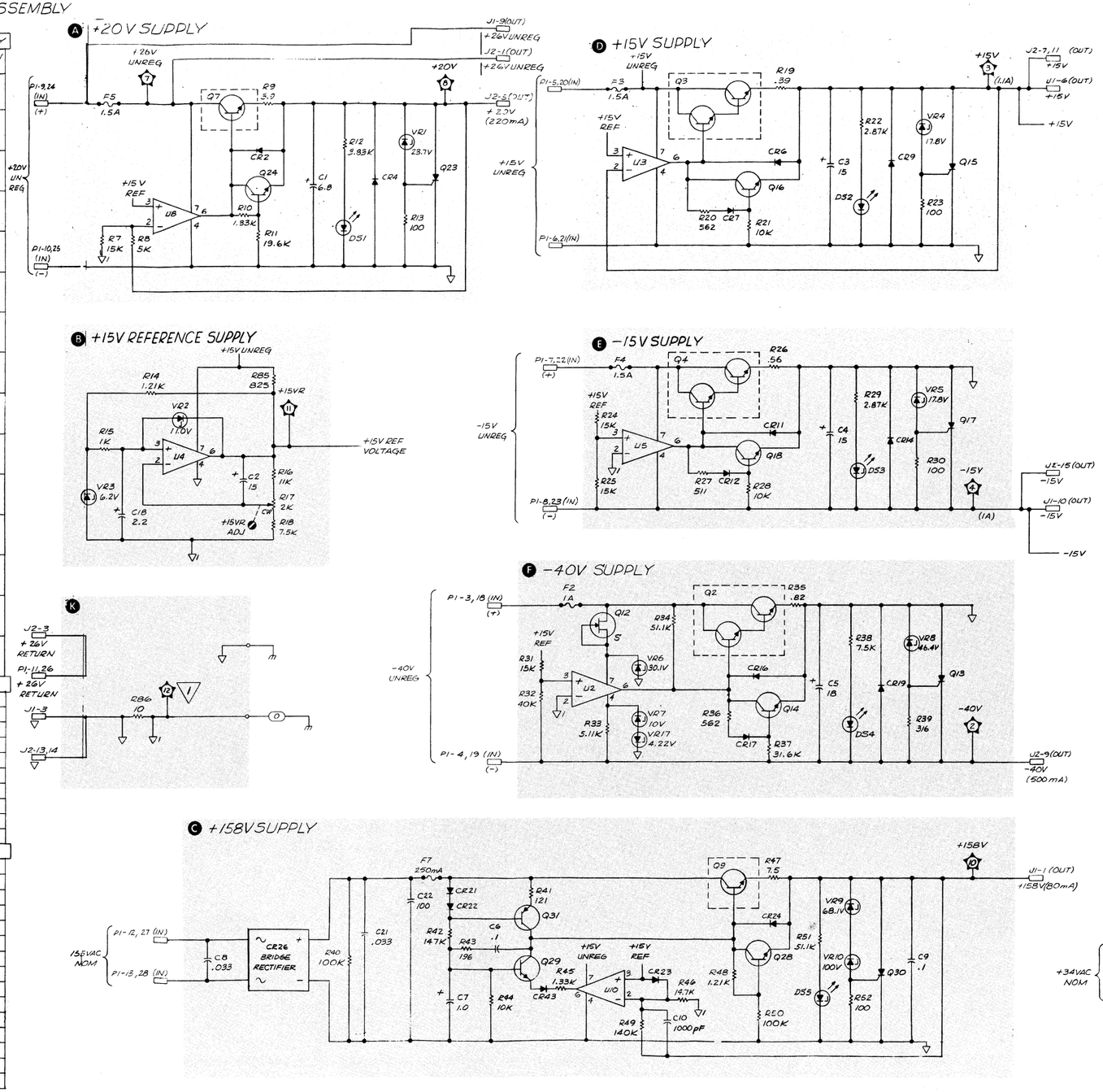

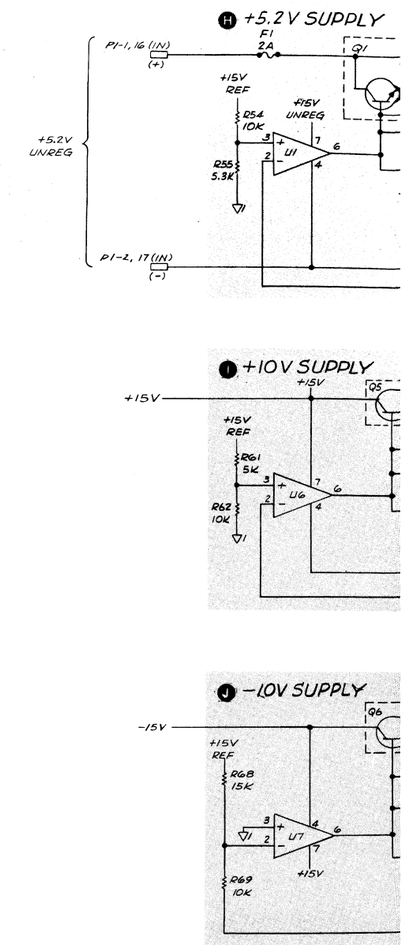

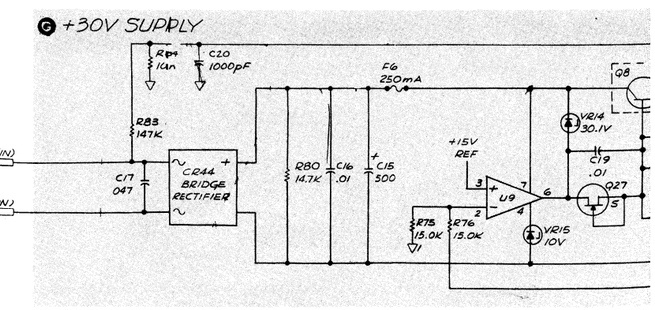

Fig

Scans by => ARTEK MEDIA © 2003-2005

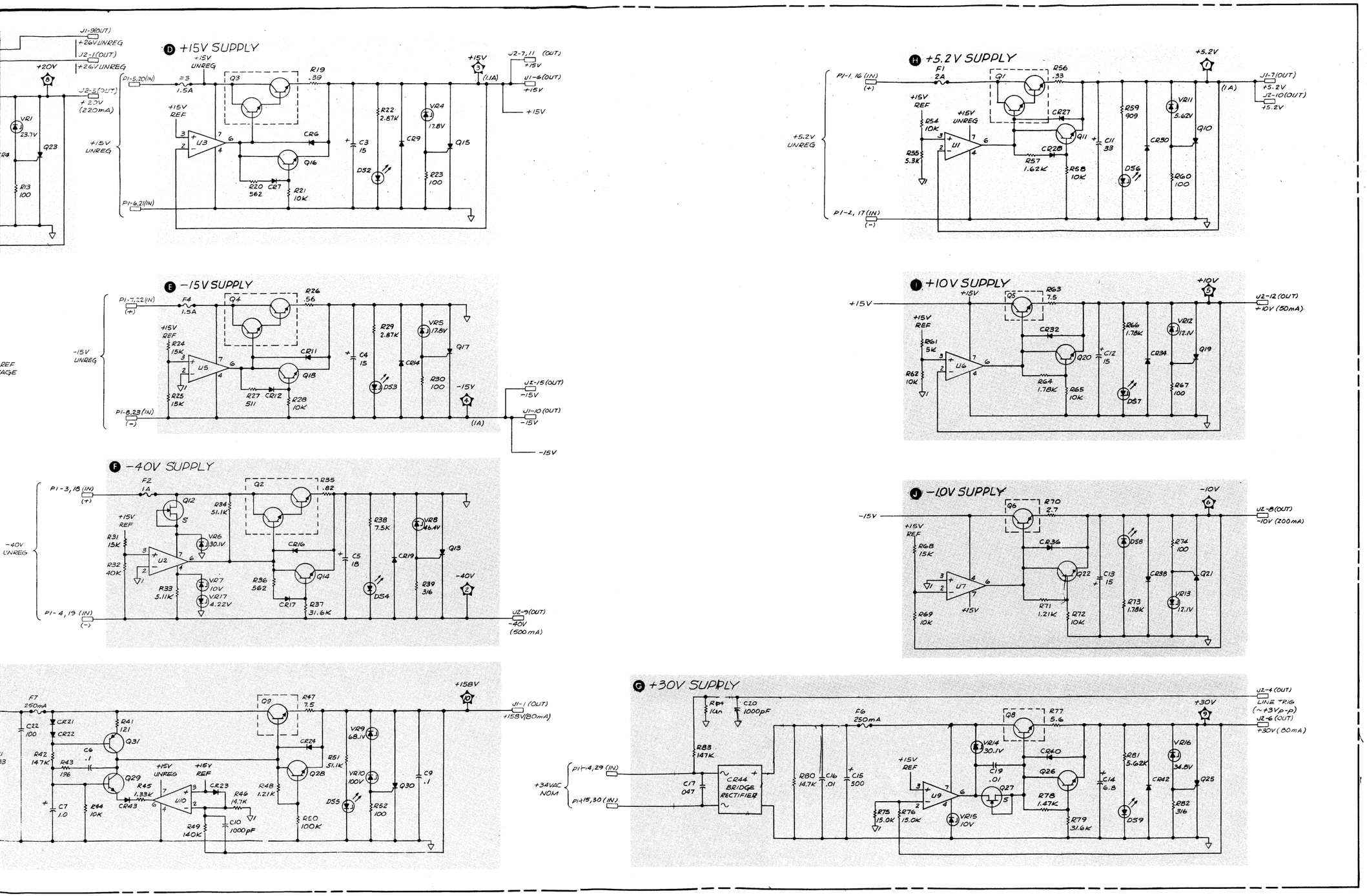

NOTES

1. REFERENCE DESIGNATORS WITHIN THIS ASSEMBLY ARE ARE ABBREVIATED. FOR COMPLETE DESIGNATOR PREFIX WITH ASSEMBLY REFERENCE DESIGNATOR.
2. UNLESS OTHERWISE INDICATED:
   RESISTANCE IN OHMS (Ω)
   CAPACITANCE IN MICROFARADS (μF)
   INDUCTANCE IN MICROHENRIES (μH)
3. Q1 THRU Q4 ARE DARLINGTON PAIR TRANSISTORS.
4. BOTTOM VIEW Q12, Q27.

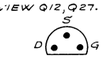

5. REFERENCE DESIGNATORS

A40A2

LAST USED	NOT USED
C22	
CR44	R1 THRU R6
Q31	R53
R86	CR1,3,5,8,10,13, 15,18,20,25,29, 31,33,35,37,39
TP12	
U10	
VR17	41.

A40A1

LAST USED	NOT USED
C17	
CR18	
Q1	
R6	
VR1	

A41

LAST USED	NOT USED
C3	
F1	
FL1	
S1	
W1	

36
A40A1, A40A2

Figure 8-103. A40A1 Rectifier Assembly, A40A2 Regulator Assembly, and Power Line Module, Schematic Diagram (2 of 2)